MONSON-SULTANA ELEMENTARY

RELOCATABLE CLASSROOM BUILDING

MONSON-SULTANA JOINT UNION ELEMENTARY SCHOOL DISTRICT

10643 AVENUE 416, SULTANA, CALIFORNIA 93666

CODE TABULATION

ALL WORK AND MATERIAL SHALL BE PERFORMED AND INSTALLED IN COMPLIANCE WITH THE FOLLOWING CODES AS ADOPTED AND AMENDED BY THE GOVERNING JURISDICTION:

PARTIAL LIST OF APPLICABLE CODES AS OF JANUARY 1, 2017

2016 BUILDING STANDARDS ADMINISTRATIVE CODE, PART 1, TITLE 24 C.C.R.
2016 CALIFORNIA BUILDING CODE (CBC), PART 2, TITLE 24 C.C.R.
(2015 INTERNATIONAL BUILDING CODE AND 2016 CA. AMENDMENTS)
2016 CALIFORNIA ELECTRICAL CODE (CEC), PART 3, TITLE 24 C.C.R.
(2014 NATIONAL ELECTRICAL CODE AND 2016 CALIFORNIA AMENDMENTS)
2016 CALIFORNIA MECHANICAL CODE (CMC), PART 4, TITLE 24 C.C.R.
(2015 UNIFORM MECHANICAL CODE AND 2016 CALIFORNIA AMENDMENTS)
2016 CALIFORNIA PLUMBING CODE (CPC), PART 5, TITLE 24 C.C.R.
(2015 UNIFORM PLUMBING CODE AND 2016 CALIFORNIA AMENDMENTS)
2016 CALIFORNIA ENERGY CODE, PART 6, TITLE 24 C.C.R.
TITLE 24 C.C.R, PART 7 - 2010 CALIFORNIA ELEVATOR SAFETY CONSTRUCTION CODE
2016 CALIFORNIA HISTORICAL BUILDING CODE, PART 8, TITLE 24 C.C.R.
2016 CALIFORNIA FIRE CODE, PART 9, TITLE 24 C.C.R.
(2015 INTERNATIONAL FIRE CODE AND 2016 CALIFORNIA AMENDMENTS)
2016 CALIFORNIA EXISTING BUILDING CODE , PART 10, TITLE 24 C.C.R.
(2015 INTERNATIONAL EXISTING BUILDING CODE AND 2016 CA. AMENDMENTS)
2016 CALIFORNIA GREEN BUILDING STANDARDS CODE, PART 11, TITLE 24 C.C.R
2016 CALIFORNIA REFERENCED STANDARDS, PART 12, TITLE 24 C.C.R.
TITLE 19 C.C.R., PUBLIC SAFETY, STATE FIRE MARSHAL REGULATIONS.

PARTIAL LIST OF APPLICABLE STANDARDS:

2016 NFPA 13, INSTALLATION OF SPRINKLER SYSTEMS (CA AMENDED)
2013 NFPA 14, SANDPIPE SYSTEMS (CA. AMENDED)
2013 NFPA 17A, WET CHEMICAL EXTINGUISHING SYSTEMS
2016 NFPA 20, INSTALLATION OF STATIONARY PUMPS FOR FIRE PROTECTION
2016 NFPA 24, INSTALLATION OF PRIVATE FIRE SERVICE MAINS AND THEIR APPURTENANCES.
2016 NFPA 80, FIRE DOOR & OTHER OPENING PROTECTIVES
2015 NFPA 2001, CLEAN AGENT FIRE EXTINGUISHING SYSTEMS
2016 NFPA 72, NATIONAL FIRE ALARM CODE (CA AMENDED). SEE UL STD. 1971 FOR 'VISUAL DEVICES'
2012 ICC 300, BLEACHERS, FOLDING AND TELESCOPING SEATING, AND GRANDSTANDS (ICC/ANSI 300-2012)

SCOPE OF WORK

PREPARATION OF SITE AREAS TO RECEIVE:

(1) 60 x 32 RELOCATABLE CLASSROOM
(2) 30x32 RELOCATABLE CLASSROOM

AS DESCRIBED IN THE CONSTRUCTION DOCUMENTS. SITE PREPARATION SHALL INCLUDE BUT NOT BE LIMITED TO THE REMOVAL OF LANDSCAPE AND SITE APPURTENANCES. SITE WORK SHALL INCLUDE BUT NOT BE LIMITED TO THE INSTALLATION OF CONCRETE WALKS, MODIFIED LANDSCAPING, IRRIGATION AND NEW MODULAR BUILDING AND FIRE SPRINKLERS. CONTRACTOR SHALL CONNECT ALL ELECTRICAL, FIRE ALARM, DATA CONNECTIONS, IRRIGATION, WATER, AND SEWER SYSTEMS AS REQUIRED FOR COMPLETE AND OPERATIONAL SYSTEMS.

UNIQUE IDENTIFIER INFORMATION FOR DSA 153 - INSPECTION CARD BUILDING IDENTIFIER

SITE WORK INSPECTION CARD REQUIRED? ☒ YES ☐ NO

CONSTRUCTION OF:	ADDITION TO:	ALTERATION TO:	RELOCATION OF:	RECONSTRUCTION OF:	REHABILITATION OF:	INCREMENT #	BUILDING TYPE	UNIQUE IDENTIFIER FOR INSPECTION CARD
☒	☐	☐	☐	☐	☐	N/A	60X32 RELO. BUILDING	BUILDING 'A'
☒						N/A	30X32 RELO BUILDING	BUILDING 'B'
☒						N/A	30X32 RELO BUILDING	BUILDING 'C'

BUILDING DATA/CODE ANALYSIS

PROJECT DESCRIPTION:	(1) 60X32 & (2) 30X32 RELO CLASSROOM AND ASSOCIATED SITE IMPROVEMENTS
PROJECT ADDRESS:	10643 AVENUE 416, SULTANA, CA 93666
BUILDING DATA:	
OCCUPANCY GROUP:	'E'
CONSTRUCTION TYPE:	VB
MAX ALLOWABLE AREA:	9,500 SQ. FT.
BUILDING AREA:	3,808 SQ. FT.

SITE AREA MAP

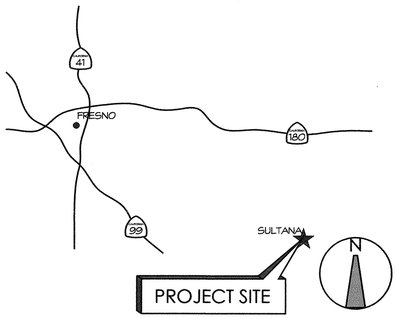

VICINITY MAP

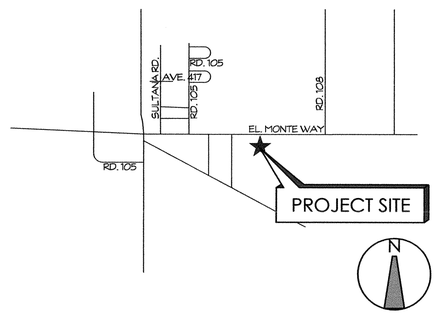

SHEET INDEX

ARCHITECTURAL

T1 COVER SHEET
T2 GENERAL NOTES
A1 OVERALL SITE PLAN
A2 DEMOLITION AND NEW SITE PLANS — A3 - DEMOLITION & NEW ACCESSIBLE RESTROOMS.
D1 DETAILS
D2 DETAILS

CIVIL

C1 TOPOGRAPHIC SURVEY
C2 GRADING AND DRAINAGE PLAN
C3 SEWER AND WATER PLAN
C4 DETAILS
C5 IRRIGATION PLAN
C6 LANDSCAPE PLAN
C7 IRRIGATION AND LANDSCAPE DETAILS

ELECTRICAL

E-1 ELECTRICAL SITE PLAN
E-2 POWER PLAN
E-3 FIRE ALARM SITE PLAN
E-31 FIRE ALARM PLAN
E-32 FIRE ALARM DETAILS
E-4 SIGNAL/COMMUNICATION SITE PLAN
E-41 SIGNAL/COMMUNICATION FLOOR PLAN

BUILDING 'A' MODULAR BUILDING

(BASED ON DSA PC #: 02-113899)

T-1.00-R TITLE PAGE
T-1.01 (02-113899) TEST & INSPECTIONS GUIDELINES
ARCHITECTURAL
A-1.01-R FLOOR PLAN
A-1.01 (02-113899) FLOOR PLANS
A-1.10 (02-113899) CEILING DETAILS
A-1.11-R REFLECTED CEILING PLAN
A-1.11 (02-113899) REFLECTED CEILING PLANS
A-1.21 (02-113899) DOOR & WINDOW SCHED., GENERAL NOTES & DETAILS
A-2.00-R INTERIOR ELEVATIONS
A-2.00 (02-113899) INTERIOR ELEVATIONS
A-2.20 (02-113899) ACCESSIBILITY DETAILS
A-3.04-R EXTERIOR ELEVATIONS
A-3.04 (02-113899) EXTERIOR ELEVATIONS
A-4.00-R ROOF PLAN
A-4.00 (02-113899) ROOF PLAN
A-5.00 (02-113899) SECTIONS
A-6.00 (02-113899) DETAILS
A-6.01 (02-113899) DETAILS
A-6.02-R DETAILS
STRUCTURAL
S1.1 (02-113899) GENERAL NOTES
S1.2 (02-113899) GENERAL NOTES
S1.3 (02-113899) GENERAL NOTES
S1.4 (02-113899) TYPICAL DETAILS
S1.5 (02-113899) TYPICAL DETAILS
S1.6 (02-113899) TYPICAL DETAILS
S2.1-R EMBEDMENT PLAN
S2.1 (02-113899) EMBEDMENT PLAN
S3.1-R FOUNDATION PLAN
S3.1 (02-113899) FOUNDATION PLAN
S4.1 (02-113899) ROOF FRAMING PLAN - SINGLE SLOPE OVERHANG
S5.1 (02-113899) FRAME ELEVATIONS & DETAILS - SINGLE SLOPE
S5.2 (02-113899) FRAME ELEVATIONS & DETAILS - SINGLE SLOPE
S5.9 (02-113899) FRAME DETAILS
S6.1 (02-113899) FOUNDATION DETAILS
S6.2 (02-113899) FOUNDATION DETAILS
S6.3-R (02-113899) FOUNDATION DETAILS
S7.1 (02-113899) FRAMING DETAILS
S7.2 (02-113899) FRAMING DETAILS - ROOF OVERHANG
MECHANICAL
M-0.01 (02-113899) MECHANICAL NOTES & SYMBOLS
M-1.03-R MECHANICAL FLOOR PLAN
M-1.01 (02-113899) MECHANICAL PLANS
M-5.01 (02-113899) MECHANICAL DETAILS
M-5.02-R MECHANICAL DETAILS
M-5.02 (02-113899) MECHANICAL SCHEDULE & DETAILS
ELECTRICAL
E-0.01 (02-113899) ELECTRICAL NOTES & SYMBOLS
E-1.01 (02-113899) ELECTRICAL PLANS
E-1.02 (02-113899) ELECTRICAL PLANS
E-1.05-R ELECTRICAL POWER PLAN
E-1.09-R ELECTRICAL LIGHTING PLAN
E-2.01 (02-113899) ELECTRICAL PLANS
E-5.03 (02-113899) ELECTRICAL LIGHTING SCHEDULES & DTLS
E-5.04-R ELECTRICAL DETAILS
PLUMBING
P-0.01 (02-113899) PLUMBING NOTES & SYMBOLS
P-1.00-R PLUMBING PLAN - S&W
P-1.01 (02-113899) PLUMBING PLANS
P-2.00-R PLUMBING PLAN - DCW & DHW
P-5.01-R PLUMBING DETAILS
P-5.01 (02-113899) PLUMBING SCHEDULES & DETAILS
FIRE SPRINKLERS
FP1-1 BUILDING FIRE SPRINKLER PLAN
FP-2 FIRE SPRINKLER DETAILS
FP-3 REFERENCE SITE PLAN
FP-1M (02-113899) FIRE SPRINKLER PLANS
FP-4M (02-113899) FIRE SPRINKLER PLANS
TITLE 24
EC-1.01-R ENERGY CALCS
EC-1.02-R ENERGY CALCS

PROJECT DIRECTORY

OWNER/ REPRESENTATIVE
MONSON-SULTANA JOINT UNION SCHOOL DISTRICT
10643 AVENUE 416
SULTANA, CALIFORNIA 93666
ph. #: 559.591.1634
cmeyer@msschool.org
contact: CHRIS MEYER

ARCHITECT
SIM-PBK
7730 N. PALM AVENUE
FRESNO, CALIFORNIA 93711
ph. #: 559.448.8400
email: diwanaga@sim-pbk.com
contact: DAVID IWANAGA

CIVIL ENGINEER
ALAN MOK ENGINEERING
7415 N. PALM AVENUE, #101
FRESNO, CALIFORNIA 93711
ph. #: 559.432.6879
fax. #: 559.432.6897
email: alan@alanmokengineering.com
contact: ALAN MOK

STATEMENT OF GENERAL CONFORMANCE

FOR ARCHITECTS/ENGINEERS WHO UTILIZE PLANS, INCLUDING BUT NOT LIMITED TO, SHOP DRAWINGS PREPARED BY OTHER LICENSED DESIGN PROFESSIONALS AND/OR CONSULTANTS

(APPLICATION NO. _____ FILE NO. 54-62

☒ THE DRAWINGS OR SHEETS LISTED ON THE COVER OR INDEX SHEET
☒ THIS DRAWING, PAGE OF SPECIFICATIONS/CALCULATIONS

HAVE/HAS BEEN PREPARED BY OTHER DESIGN PROFESSIONALS OR CONSULTANTS WHO ARE LICENSED AND/OR AUTHORIZED TO PREPARE SUCH DRAWINGS IN THIS STATE. IT HAS BEEN EXAMINED BY ME FOR:

1) DESIGN INTENT, AND APPEARS TO MEET THE APPROPRIATE REQUIREMENTS OF TITLE 24, CALIFORNIA CODE OF REGULATIONS, AND THE PROJECT SPECIFICATIONS PREPARE BY ME AND
2) COORDINATION WITH MY PLANS AND SPECIFICATIONS, AND IS ACCEPTABLE FOR INCORPORATION INTO THE CONSTRUCTION OF THIS PROJECT.

THE STATEMENT OF GENERAL CONFORMANCE SHALL NOT BE CONSTRUED AS RELIEVING ME OF MY RIGHTS, DUTIES, AND RESPONSIBILITIES UNDER SECTION 17302 AND 81138 OF THE EDUCATION CODE, AND SECTIONS 4-336, 4-341 AND 4-344 OF TITLE 24, PART 1 (TITLE 24 PART 1, SECTION 4-317 (B)).

I FIND THAT:
☒ ALL DRAWINGS OR SHEETS LISTED ON THE COVER OR INDEX SHEET
☐ THIS DRAWING OR PAGE

☒ IS/ARE IN GENERAL CONFORMANCE WITH THE PROJECT DESIGN, AND
☒ HAS/HAVE BEEN COORDINATED WITH THE PROJECT PLANS AND SPECIFICATIONS

SIGNATURE _____ DATE 07.17.2018

ARCHITECTS OR ENGINEER DESIGNATED TO BE IN GENERAL RESPONSIBLE CHARGE.

DAVID IWANAGA
PRINT NAME

C 17199 — LICENSE NUMBER — 03.31.2019 — EXPIRATION DATE

SIMPBK
7591 NORTH INGRAM AVENUE #101 - FRESNO, CALIFORNIA 93711
T559.448.8400 - F559.448.8467 - www.sim-pbk.com

LICENSED ARCHITECT * DAVID MICHAEL IWANAGA * C 17199 * 3-31-19 RENEWAL DATE * STATE OF CALIFORNIA

IDENTIFICATION STAMP DIV. OF THE STATE ARCHITECT 02-117009 AC PLS SS DATE 7/25/2018

FILE: 54-62
PIN: 72069-05

Monson-Sultana School

AC: DD PLS: MG SS: RY

PROJECT NAME
MONSON-SULTANA ELEMENTARY RELOCATABLE
10643 AVENUE 416, SULTANA, CA 93666

DATE	DESCRIPTION	No.	DATE	DESCRIPTION

PROJECT DEVELOPMENT — REVISIONS

SHEET NAME
COVER SHEET

PROJECT ARCHITECT	PROJECT NUMBER	SHEET NUMBER
DAVID IWANAGA	18-28	T1
DRAWN BY	SCALE	
	NO SCALE	
CHECKED BY	DATE	
	07.17.18	

PRE-BID JOB VISIT

IT IS MANDATORY THAT ALL BIDDERS MAKE A PRE-BID JOB SITE VISIT. VISITING HOURS SHALL BE ESTABLISHED BY THE DISTRICT. ANY OMISSIONS AND EXTRA WORK REQUIRING ADDITIONAL CHARGES WILL NOT BE ALLOWED BY THE BIDDER. IT IS THE RESPONSIBILITY OF THE BIDDER TO MAKE A COMPREHENSIVE PRE-BID ANALYSIS AND INCLUDE ALL WORK IN BID.

ORGANIZATION

THE ORGANIZATION OF THESE DRAWINGS IS NOT INTENDED TO CONTROL THE DIVISION OF WORK AMONG SUBCONTRACTORS. IT SHALL BE THE CONSTRUCTION MANAGER'S RESPONSIBILITY TO DIVIDE THE WORK.

COPIES OF THESE DRAWINGS ARE SUPPLIED TO THE OWNER, AND THE CONTRACTOR FOR USE IN THE CONSTRUCTION OF THIS PROJECT ONLY. THE DRAWINGS ARE NOT TO BE REPRODUCED, CHANGED, OR COPIED IN ANY FORM OR MANNER WHATSOEVER, NOR ARE THEY TO BE ASSIGNED TO A THIRD PARTY WITHOUT FIRST OBTAINING THE WRITTEN PERMISSION OF S.I.M. ARCHITECTS. ALL DRAWINGS PREPARED BY S.I.M. ARCHITECTS ARE AND SHALL REMAIN THE PROPERTY OF S.I.M. ARCHITECTS.

IT IS THE INTENTION OF THE PLANS AND SPECIFICATIONS TO COVER ALL THINGS REQUIRED TO MAKE COMPLETE AND OPERATIVE SYSTEMS. CONTRACTOR IS TO FURNISH ALL LABOR, MATERIALS, TRANSPORTATION, EQUIPMENT, MISCELLANEOUS SERVICES, ETC., REQUIRED TO ACCOMPLISH THIS RESULT. ANYTHING WHICH MAY BE REASONABLY CONSTRUED AS A NECESSARY PART OF THE INSTALLATION IS TO BE INCLUDED WHETHER SPECIFICALLY SHOWN OR MENTIONED. THE ARCHITECT WILL GIVE ANY INTERPRETATIONS NECESSARY FOR THE CONTRACTOR TO PROPERLY ESTIMATE THE PROJECT.

DOCUMENT INTENTIONS

THE INTENT OF THESE DRAWINGS AND SPECIFICATIONS IS THAT THE WORK OF THE ALTERNATION, REHABILITATION OR RECONSTRUCTION IS TO BE IN ACCORDANCE WITH TITLE 24, CALIFORNIA CODE OF REGULATIONS. SHOULD ANY EXISTING CONDITIONS SUCH AS DETERIORATION OR NONCOMPLYING CONSTRUCTION BE DISCOVERED WHICH IS NOT COVERED BY THE CONTRACT DOCUMENTS WHEREIN THE FINISHED WORK WILL NOT COMPLY WITH TITLE 24, CALIFORNIA CODE OF REGULATIONS, A CONSTRUCTION CHANGE DOCUMENT OR A SEPARATE SET OF PLANS AND SPECIFICATIONS, DETAILING AND SPECIFYING THE REQUIRED WORK SHALL BE SUBMITTED TO AND APPROVED BY THE OFFICE BEFORE PROCEEDING WITH THE WORK.

DEFERRED APPROVALS

THE FOLLOWING SUBMITTALS WILL BE PROVIDED FOR AGENCY REVIEW, APPROVAL AND SEPARATE PERMITS, AFTER THE PERMITS HAVE BEEN ISSUED FOR THE WORK INDICATED IN THIS SET OF DRAWINGS:

1. NONE

'DEFERRED SUBMITTAL' ITEM ARE BE SUBMITTED TO THE ARCHITECT FOR REVIEW AND OWNER'S APPROVAL. WHEN APPROVED BY THESE PARTIES, RE-SUBMIT 'DEFERRED SUBMITTAL' DRAWINGS AS DIRECTED BY THE ARCHITECT, TO THE LOCAL AGENCY FOR APPROVALS. WORK FOR ANY DEFERRED SUBMITTAL ITEM SHALL NOT BEGIN UNTIL AGENCY APPROVALS & PERMITS ARE ISSUED.

NOTES

THE FOLLOWING DOCUMENTS SHALL BE ON THE JOBSITE PRIOR TO ISNTALLATION OF THE UNIT(S):

a) IN-PLANT VERIFIED REPORT
b) LABORATORY VERIFIED REPORT
c) WELDING VERIFIED REPORT

THE SITE INSPECTOR SHALL VERIFY THE ABOVE DOCUMENTS AND SERIAL NUMBERS ARE APPLICABLE TO EACH UNIT PRIOR TO INSTALLATION OF THE UNIT(S).

NOTIFY ARCHITECT AND THE DIVISION OF THE STATE ARCHITECT FIELD ENGINEER IF ANY DISCREPANCIES OCCUR.

GENERAL SITE NOTES

1. ALL ACCESSIBLE PARKING STALLS SHALL BE MARKED WITH THE INTERNATIONAL SYMBOL OF ACCESSIBILITY AND A WARNING THAT VEHICLES IN VIOLATION OF THE MUNICIPAL CODE SHALL BE TOWED AWAY. THE INTERNATIONAL SYMBOL AND TOW-AWAY WARNING SHALL BE POSTED IN A CONSPICUOUS PLACE AT EACH ENTRANCE.
2. ALL ACCESSIBLE PARKING STALLS SHALL BE PLACED ADJACENT TO FACILITY ACCESS RAMPS OR IN STRATEGIC AREAS WHERE THE DISABLED SHALL NOT HAVE TO WHEEL OR WALK BEHIND PARKED VEHICLES OTHER THAN THEIR OWN PARKED CAR/VAN WHILE TRAVELING TO OR FROM ACCESSIBLE PARKING STALLS AND RAMPS.
3. BETWEEN THE ACCESSIBLE PARKING SPACE AND THE ENTRANCE INTO THE BUILDING, THERE SHALL BE NO VERTICAL OFFSETS MORE THAN 1/2" (MAX. VERT. RISE OF 1/4"). CHANGES IN LEVEL BETWEEN 1/4" AND 1/2" SHALL BE BEVELED WITH A SLOPE NO GREATER THAN 1:2.
4. SITE WALKWAYS SHALL BE 48" WIDE MINIMUM, AND SHALL PROVIDE A BARRIER FREE PATH OF TRAVEL FOR A PERSON IN A WHEELCHAIR. WALKWAY SHALL BE A CONTINUOUS, SLIP-RESISTANT SURFACE WITHOUT ANY ABRUPT VERTICAL CHANGES EXCEEDING 1/2" AT 1 UNIT VERTICAL TO 2 UNITS HORIZONTAL MAXIMUM SLOPE; EXCEPT THAT LEVEL CHANGES DO NOT EXCEED 1/4" MAXIMUM VERTICAL. ACCESSIBLE ROUTES OF TRAVEL SHALL HAVE GRADIENT SLOPES LESS THAN 1 UNIT VERTICAL TO 20 UNITS HORIZONTAL (5 %) WITH A MAXIMUM CROSS SLOPE OF 2%.
5. CONTRACTOR SHALL VERIFY THE SIZE AND LOCATION OF ALL UTILITY LINES AND STUBS TO THE BUILDING(S) AS MAY BE INDICATED ON THE PLANS.
6. ANY SURVEY MONUMENT WITHIN THE AREA OF CONSTRUCTION SHALL BE PRESERVED OR RESET BY A PERSON LICENSED TO PRACTICE LAND SURVEYING IN THE STATE OF CALIFORNIA.
7. REPAIR ALL DAMAGED AND/OR OFF-GRADE CONCRETE STREET IMPROVEMENTS AS DETERMINED BY THE CONSTRUCTION MANAGEMENT ENGINEER PRIOR TO OCCUPANCY.
8. ALL ACCESS ROADS SHALL BE INSTALLED AND MADE SERVICEABLE PRIOR TO AND DURING TIME OF CONSTRUCTION.
9. ALL CONSTRUCTION WORK ON THIS PROJECT IS SUBJECT TO INTERRUPTION IF THE ROAD SYSTEM BECOMES IMPASSABLE FOR FIRE APPARATUS DUE TO RAIN OR OTHER OBSTACLES.
10. LANDSCAPING MUST BE IN PLACE BEFORE ISSUANCE OF THE CERTIFICATE OF OCCUPANCY.
11. FIRE HYDRANTS SHALL BE TESTED, APPROVED AND ALL ACCESS ROADS SHALL BE INSTALLED AND MADE SERVICEABLE PRIOR TO AND DURING CONSTRUCTION
12. LIGHTING WHERE PROVIDED TO ILLUMINATE PARKING OR SALES DISPLAY AREAS SHALL BE HOODED AND SO ARRANGED AND CONTROLLED SO AS NOT TO CAUSE A NUISANCE EITHER TO STREET TRAFFIC OR TO THE LIVING ENVIRONMENT. THE AMOUNT OF LIGHT SHALL BE PROVIDED ACCORDING TO THE STANDARDS OF THE DEPARTMENT OF PUBLIC WORKS.
13. MAXIMUM CROSS SLOPES OF 2% AT ALL LANDINGS, RAMPS AND/OR WALKS.
14. ROOF-MOUNTED AND DETACHED MECHANICAL EQUIPMENT SHALL BE SCREENED FROM VIEW AND ACOUSTICALLY BAFFLED TO PREVENT THE NOISE LEVEL RATING FOR THE EQUIPMENT FROM EXCEEDING 55 Ldn MEASURED AT THE NEAREST PROPERTY LINE.
15. NO USES OF LAND, BUILDINGS OR STRUCTURES OTHER THAN THOSE SPECIFICALLY APPROVED PURSUANT TO THIS SITE PLAN SHALL BE PERMITTED.
16. TWO MEANS OF INGRESS & EGRESS MUST BE MAINTAINED DURING ALL PHASES OF DEVELOPMENT.
17. DEED(S) OF EASEMENT FOR THE REQUIRED DEDICATION(S) SHALL BE PREPARED BY THE OWNER/ DEVELOPER'S ENGINEER AND SUBMITTED TO THE CITY WITH VERIFICATION OF THE OWNERSHIP PRIOR TO ISSUANCE OF BUILDING PERMITS.
18. TREES SHALL BE MAINTAINED IN GOOD HEALTH, HOWEVER, TREES MAY NOT BE TRIMMED OR PRUNED TO REDUCE THE NATURAL HEIGHT OR OVERALL CROWN OF THE TREE, EXCEPT AS NECESSARY FOR THE HEALTH OF THE TREE AND PUBLIC SAFETY, OR AS MAY OTHERWISE BE APPROVED BY THE DEVELOPMENT DEPARTMENT.
19. NO STRUCTURES OF ANY KIND MAY BE INSTALLED OR MAINTAINED WITHIN THE ABOVE-LANDSCAPE AREAS. NO EXPOSED UTILITY BOXES, TRANSFORMERS, METERS, PIPING, (EXCEPTING THE BACKFLOW PREVENTION DEVICE) ETC., ARE ALLOWED TO BE LOCATED IN THE LANDSCAPE AREAS OR SETBACKS OR ON THE STREET FRONTAGES OF THE BUILDINGS. ALL TRANSFORMERS, ETC., SHALL BE SHOWN ON THE SITE PLAN. THE BACKFLOW DEVICE SHALL BE SCREENED BY LANDSCAPING OR SUCH OTHER MEANS AS MAY BE APPROVED.
20. PRIOR TO FINAL INSPECTION, A WRITTEN CERTIFICATION, SIGNED BY A LANDSCAPE PROFESSIONAL APPROVED BY THE DIRECTOR, SHALL BE SUBMITTED STATING THAT THE REQUIRED LANDSCAPING AND IRRIGATION SYSTEM WAS INSTALLED IN ACCORDANCE BY THE PLANNING DIVISION, DEVELOPMENT DEPARTMENT.
21. IF ARCHAEOLOGICAL AND/OR ANIMAL FOSSIL MATERIAL IS ENCOUNTERED DURING PROJECT SURVEYING, GRADING, EXCAVATING, OR CONSTRUCTION, WORK SHALL STOP IMMEDIATELY.

INSPECTOR NOTES

ALL NEW ADDITION WORK SHALL CONFORM TO TITLE 24, CALIFORNIA CODE OF REGULATIONS (CCR).

CHANGES TO THE APPROVED DRAWINGS AND SPECIFICATIONS SHALL BE MADE BY AN ADDENDA OR A CONSTRUCTION CHANGE DOCUMENT APPROVED BY THE DIVISION OF THE STATE ARCHITECT, AS REQUIRED BY SECTION 4-338, PART 1, TITLE 24 CCR. NO WORK SHALL COMMENCE UNTIL APPROVED BY DIVISION OF THE STATE ARCHITECT.

A PROJECT INSPECTOR EMPLOYED BY THE DISTRICT AND APPROVED BY DSA SHALL PROVIDE CONTINUOUS INSPECTION OF THE WORK. THE DUTIES OF THE INSPECTOR ARE DEFINED IN SECTION 4-342, PART 1, TITLE 24, C.C.R.

THIS PROJECT REQUIRES CLASS 2 AND RELOCATABLE BUILDING IN-PLANT INSPECTOR.

DSA APPROVED TESTING LAB HIRED BY OWNER.

DEMOLITION NOTES

1. REMOVE ALL ITEMS REQUIRED TO PERFORM THE NEW WORK AS DESCRIBED IN THIS ENTIRE SET OF DRAWINGS AND SPECIFICATIONS. WHETHER OR NOT SPECIFICALLY SHOWN ON THIS DRAWING.
2. CONTRACTOR TO FIELD VERIFY EXISTING CONDITIONS AND DIMENSIONS AS SHOWN ON PLANS. NOTIFY THE ARCHITECT IMMEDIATELY IF THERE IS ANY DISCREPANCY BETWEEN EXISTING CONSTRUCTION AND THE DRAWINGS.

GENERAL NOTES

1. SOLELY AS A CONVENIENCE TO THE OWNER, THE ARCHITECT MAY INCLUDE DOCUMENTS PREPARED BY CERTAIN CONSULTANTS (OR INCORPORATE THE RECOMMENDATION OF SAID CONSULTANTS IN DOCUMENTS PREPARED BY THE ARCHITECT) WITHIN THE SET OF DOCUMENTS ISSUED BY THE ARCHITECT IT BEING EXPRESSLY UNDERSTOOD THAT, BY SAID ISSUANCE, THE ARCHITECT ASSUMES NO LIABILITY FOR THE SERVICES OF SAID CONSULTANTS.
2. THE BOOK OF SPECIFICATIONS ARE A PART OF THIS CONTRACT.
3. DRAWINGS ARE NOT TO BE SCALED. DIMENSIONS GOVERN.
4. PRIORITY OF DOCUMENTS: FIGURED DIMENSIONS ON DRAWINGS SHALL GOVERN, BUT WORK NOT DIMENSIONED SHALL BE AS DIRECTED. WORK NOT PARTICULARLY SHOWN OR SPECIFIED SHALL BE THE SAME AS SIMILAR PARTS THAT ARE SHOWN OR SPECIFIED. LARGE SCALE DETAILS SHALL TAKE PRECEDENCE OVER SMALLER SCALE DRAWINGS AS TO SHAPE & DETAILS OF CONSTRUCTION. SPECIFICATIONS SHALL GOVERN TO MATERIALS, WORKMANSHIP AND INSTALLATION PROCEDURES. THE SPECIFICATIONS CALLING FOR FOR THE HIGHER QUALITY MATERIAL OR WORKMANSHIP SHALL PREVAIL. CONTRACTOR SHALL PROMPTLY NOTIFY THE ARCHITECT/ENGINEER IN WRITING OF DRAWINGS & SPECIFICATIONS WHICH MAY BE IN CONFLICT. IN THE EVENT THAT DRAWINGS AND SPECIFICATIONS ARE IN CONFLICT, THE MORE RESTRICTIVE, HIGHER QUALITY MATERIAL OR WORKMANSHIP SHALL PREVAIL.
5. THE TYPICAL DETAILS AND NOTES SHOWN ON THESE SHEETS SHALL APPLY IN ALL CASES UNLESS SHOWN OTHERWISE. WHERE NO DETAILS ARE SHOWN, CONSTRUCTION SHALL BE AS SHOWN FOR OTHER SIMILAR WORK. NOTES AND DETAILS ON DRAWINGS SHALL TAKE PRECEDENCE OVER GENERAL NOTES AND TYPICAL DETAILS. ALL WORK AND CONSTRUCTION SHALL COMPLY WITH APPLICABLE BUILDING CODES, REGULATIONS, AND SAFETY REQUIREMENTS.
6. ALL MATERIALS AND WORK TO CONFORM TO LATEST GOVERNING BUILDING CODES AND REGULATIONS.
7. CONTRACTOR SHALL VERIFY ALL DIMENSIONS & CONDITIONS PRIOR TO ANY WORK AND SHALL NOTIFY THE ARCHITECT OF ANY DISCREPANCY. CONTRACTOR SHALL BE RESPONSIBLE FOR ALL REPAIRS REQUIRED DUE TO HIS FAILURE TO DO SO. DO NOT SCALE DRAWINGS. DIMENSIONS GOVERN ANY DISCREPANCIES.
8. CONTRACTOR SHALL PROVIDE PROTECTION AS NECESSARY PER CITY & LOCAL CODE REQUIREMENTS, AND ALL APPLICABLE CODES & REQUIREMENTS AS INDICATED ON COVER SHEET.
9. CONTRACTOR SHALL PROVIDE ACCESS PANELS AS REQUIRED BY PLUMBING, AIR CONDITIONING AND OTHER TRADES, AND AS REQUIRED BY CODES.
10. EQUIPMENT WHICH REQUIRES PREVENTATIVE MAINTENANCE FOR EFFICIENT OPERATION MUST BE FURNISHED WITH MAINTENANCE INFORMATION.
11. THE CONTRACTOR SHALL PROVIDE THE OWNER WITH A LIST OF THE HEATING, COOLING, WATER HEATING, LIGHTING SYSTEM, AND INSTRUCTION ON HOW TO USE THEM EFFICIENTLY.
12. PRIOR TO BUILDING FINAL INSPECTION, APPLIANCE CERTIFICATE, WHICH IS PROVIDED BY APPLIANCE MANUFACTURER, MUST BE COMPLETED BY THE INSTALLER OR GENERAL CONTRACTOR AND POSTED IN A CONSPICUOUS LOCATION. (INCLUDING HVAC UNITS AND WATER HEATERS.)
13. NO ADDITIONAL ROOF OPENINGS OR ROOF MOUNTED EQUIPMENT IS ALLOWED BEYOND THAT WHICH IS SHOWN ON THESE PLANS WITHOUT WRITTEN CONSENT OF THE ARCHITECT.
14. CONTRACTOR(S) IS RESPONSIBLE FOR: CONFIRMING AND CORRELATING ALL QUANTITIES AND DIMENSIONS; SELECTING FABRICATION PROCESSES AND TECHNIQUES OF CONSTRUCTION; COORDINATING THAT ALL TRADES HAVE REVIEWED ENTIRE WORKING DOCUMENTATION AND NOT LIMITED TO SAID SPECIFIC TRADE.
15. CONTRACTOR SHALL BE RESPONSIBLE FOR REQUESTING ALL INSPECTIONS AND TESTS INDICATED ON THE PLANS AND SPECIFICATIONS, RECOMMENDED BY THE SOILS REPORTAND/OR REQUIRED BY ANY GOVERNMENT AGENCY. OWNER SHALL BEAR THE COSTS.
16. ALL REVISIONS TO THE DRAWINGS MUST PROCEED THROUGH NORMAL CHANNELS. ANY TENANT OR CONTRACTOR REVISIONS MAY BE CONSIDERED NULL AND VOID. TENANT SHALL NOT BE ALLOWED TO DO THEIR OWN WORK PRIOR TO THE GENERAL CONTRACTOR'S COMPLETION WITHOUT WRITTEN NOTICE BY THE OWNER, TO THE CONTRACTOR.
17. CONTRACTOR SHALL COMPLY WITH THE CALIFORNIA FIRE CODE CHAPTER 33: FIRE SAFETY DURING CONSTRUCTION AND DEMOLITION
18. IN PRE-CONSTRUCTION MEETING, CONTRACTOR TO DISCUSS WITH OWNER THE FOLLOWING ITEMS:

A. STAGING AREAS
B. WORK SCHEDULING
C. LIMITS OR OWNER'S INVOLVEMENT
D. SECURITY DURING CONSTRUCTION

SIMPBK
7591 NORTH INGRAM AVENUE #101 · FRESNO, CALIFORNIA 93711
T559.448.8400 · F559.448.8467 · www.sim-pbk.com

LICENSED ARCHITECT · DAVID MICHAEL IWANAGA · C 17199 · 3-31-19 RENEWAL DATE · STATE OF CALIFORNIA

IDENTIFICATION STAMP
DIV. OF THE STATE ARCHITECT
02-117009
AC ___ FLS ___ SS ___
DATE 7/23/18

FILE: 54-62
PTN: 72009-05

Monson-Sultana School

PROJECT NAME
MONSON-SULTANA ELEMENTARY RELOCATABLE
10643 AVENUE 416, SULTANA, CA 93666

DATE	DESCRIPTION (PROJECT DEVELOPMENT)	No.	DATE	DESCRIPTION (REVISIONS)
.	.	.	.	.
.	.	.	.	.
.	.	.	.	.

SHEET NAME: GENERAL NOTES

PROJECT ARCHITECT: DAVID IWANAGA
PROJECT NUMBER: 18-28
DRAWN BY:
SCALE: NO SCALE
CHECKED BY:
DATE: 07.17.18
SHEET NUMBER: T2

e:\18-28 monson-sultana juesd\work_18-28_t2 notes sheet.dwg | T2 NOTES SHEET | 2018.07.14 14:46 | jasond

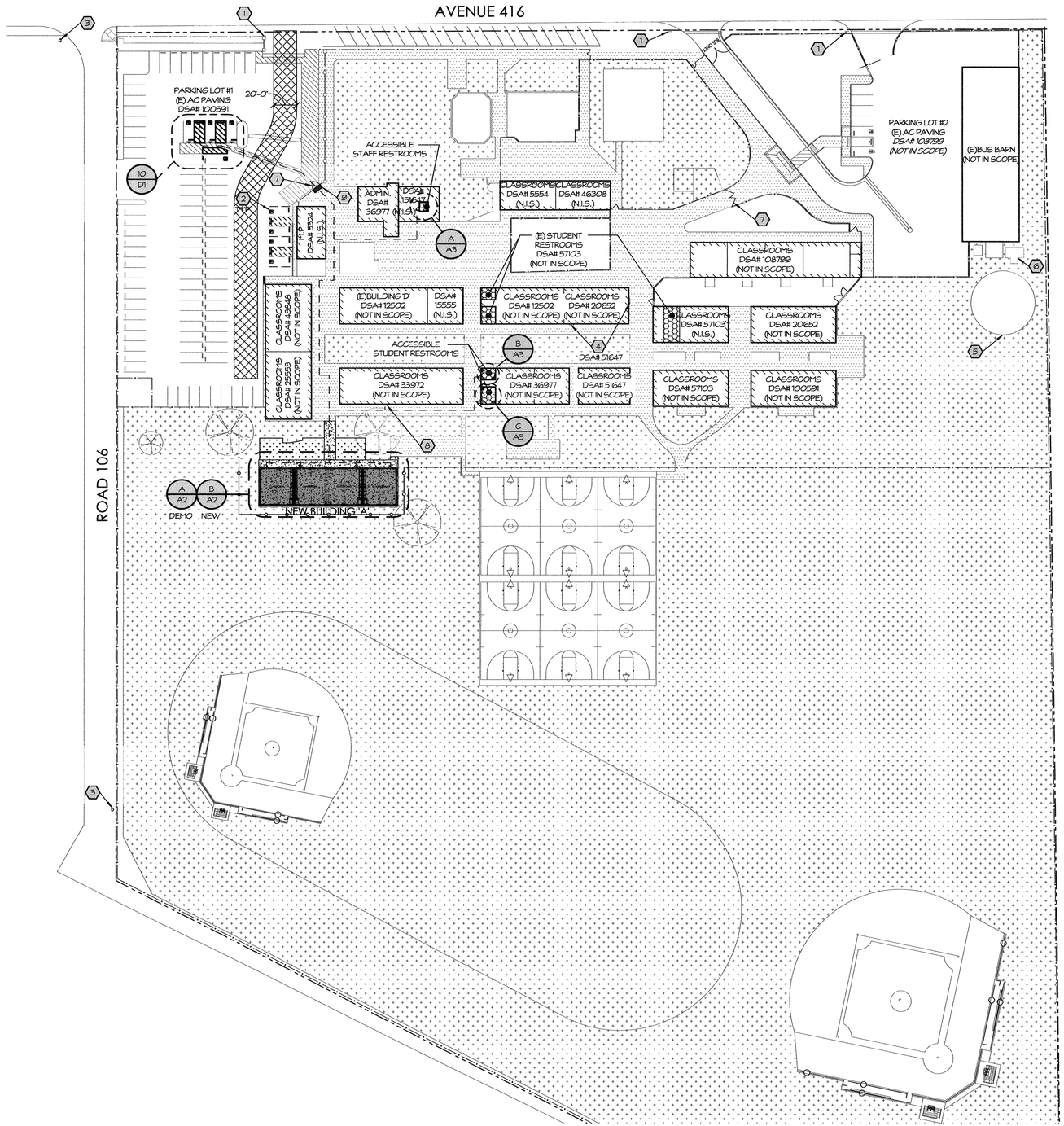

OVERALL SITE PLAN

1"=50'-0"

KEYNOTES

1. EXISTING ACCESSIBLE ENTRY SIGNAGE, SEE DETAIL 7/D1 (DSA# 02-108799)
2. BLACK OUT EXISTING PARKING SPACES, REMOVE EXISTING SIGNAGE
3. EXISTING FIRE HYDRANT
4. EXISTING ACCESSIBLE DRINKING FOUNTAIN
5. EXISTING 142,781 GAL. WATER TANK (MIN. FLOW 1000 GPM.) TO REMAIN (DSA# 02-108799)
6. EXISTING FIRE PUMP HOUSE TO REMAIN (DSA# 02-108799)
7. EXISTING CHAIN LINK GATES W/ SIGN THAT READS 'THIS GATE IS TO REMAIN LOCKED IN THE OPEN POSITION DURING BUSINESS/ SCHOOL HOURS OR DURING PUBLIC FUNCTIONS'
8. EXISTING ACCESSIBLE DRINKING FOUNTAIN, SEE DETAIL 25/D2. FOR NEW PIPE GUARDRAILS.
9. NEW DETECTABLE WARNING, SEE DETAIL 22/D2

LEGEND

- ACCESSIBLE PATH OF TRAVEL
- EXISTING PROPERTY LINE
- EXISTING CHAIN-LINK FENCE
- EXISTING BUILDING
- EXISTING CONCRETE
- EXISTING GRASS
- NEW RELOCATABLE CLASSROOM
- NEW CONCRETE
- NEW GRASS/ TURF
- EXISTING 20'-0" WIDE FIRE TRUCK ACCESS

SCOPE OF WORK

PREPARATION OF SITE AREAS TO RECEIVE:

(2) 30' x 32' & (1) 60' x 32' RELOCATABLE CLASSROOMS

AS DESCRIBED IN THE CONSTRUCTION DOCUMENTS, SITE PREPARATION SHALL INCLUDE BUT NOT BE LIMITED TO THE REMOVAL OF LANDSCAPE AND SITE APPURTENANCES. SITE WORK SHALL INCLUDE BUT NOT BE LIMITED TO THE INSTALLATION OF CONCRETE WALKS, MODIFIED LANDSCAPING, IRRIGATION AND NEW MODULAR BUILDING. CONTRACTOR SHALL CONNECT ALL ELECTRICAL, FIRE ALARM, DATA CONNECTIONS, IRRIGATION, WATER, AND SEWER SYSTEMS AS REQUIRED FOR COMPLETE AND OPERATIONAL SYSTEMS.

DSA 810

LOCAL FIRE AUTHORITY REVIEW

To facilitate the Division of the State Architect's (DSA) approval of the Fire/Life Safety portion of a project, DSA requires Local Fire Authority (LFA) review of certain elements as identified in this form. Use of this form is mandatory for projects that add square footage to a campus or if any item on this form is relevant to the project. For additional information, see DSA 810 Instructions and DSA Policy 09-01.

PROJECT INFORMATION	
School District/ Owner:	MONSON-SULTANA JOINT UNION SCHOOL DISTRICT
Project Name/ School:	MONSON-SULTANA SCHOOL
Project Address:	10643 AVENUE 416, SULTANA, CA 93666
LOCAL FIRE AUTHORITY (LFA)	
LFA Agency Name:	TULARE FIRE DEPARTMENT
LFA Reviewer Name:	JOHN MEYER — Title: Fire Inspector
Email:	jmeyer@co.tulare.ca.us — Telephone Number: 559.802.9308

I have reviewed and responded to the applicable items for this project as listed below.
Note: Only sign this form once it is imaged onto the site plan. A loose form is not acceptable to DSA.

LFA Reviewer's Signature: _____ Date: 7/2/18

Review Key: "Y" = Complies with LFA requirements; "N" = Not approved (complete Section B); "NA" = Not applicable to the project; "NR" = LFA elects not to review

	Description	Y	N	NA	NR
1	Where an elevator does not meet medical emergency service cab size, per the California Building Code (CBC), use of stairways for emergency rescue and patient transport is acceptable.			X	
2	Access roads, fire lane markings, pavers and gate entrances are in accordance with Title 19, California Code of Regulations and the California Fire Code, Chapter 5.	X			
3	Fire hydrant location and distribution complies with the California Fire Code (or see #4).	X			
4	Fire hydrant location and distribution complies with NFPA 1142, "Alternate Means." If "NR" is checked, DSA can only approve on-site water storage as an alternate. The signature of the school district is required to acknowledge the use of alternate means.				X
	Signature of School District Official: _____ Date: _____ Print the School District Official's Name: _____				
5	The location(s) of the proposed post indicator valve and fire department connection meet the requirements of this jurisdiction.			X	
6	The location(s) of the detector check valve meet the requirements of this jurisdiction.			X	
7	Is the project located in a hazard severity zone area? (CBC, Chapter 7A, Section 701A.) ☐ Yes ☒ No. Check type if "Yes": ☐ Moderate ☐ High ☐ Very High ☐ WUI. (If one of these boxes is checked, the project design must meet the requirements of Chapter 7A.)				
8	COMMENTS (note deficiencies). Knox box required @ Entrance				

DSA 810 (rev 05-12-14)
DIVISION OF THE STATE ARCHITECT — DEPARTMENT OF GENERAL SERVICES — STATE OF CALIFORNIA

PARKING LOT DATA

(E) PARKING LOT #1 (DSA# 100591)

TOTAL PARKING STALLS:	81
ACCESSIBLE PARKING STALLS REQUIRED:	4
ACCESSIBLE PARKING STALLS PROVIDED:	4 (2 STANDARD & 2 VAN)

PATH OF TRAVEL NOTES

1. ALL BUILDINGS CAN BE ACCESSED FROM PARKING SPACES
2. ARCHITECT HAS SURVEYED/INSPECTED THE PATH OF TRAVEL (POT) AS INDICATED ON THE PLANS AND HAS FOUND IT TO BE, OR HAS INDICATED ON THE PLANS REMEDIAL WORK WHICH WOULD CAUSE IT TO BE, A BARRIER-FREE ACCESSIBLE ROUTE:
   - AT LEAST 48" IN WIDTH; OR AS APPROVED BY CODE
   - WITHOUT ABRUPT LEVEL CHANGES EXCEEDING 1/2" IF BEVELED AT 1:2 MAXIMUM SLOPE, OR VERTICAL LEVEL CHANGES EXCEEDING 1/4"
   - WITH A FIRM, STABLE, AND SLIP RESISTANT WALKING SURFACE
   - WITH A RUNNING SLOPE OF 1:20 OR LESS, UNLESS OTHERWISE INDICATED, AND A CROSS SLOPE OF 1:50 OR LESS
   - IS FREE FROM OVERHEAD OBSTRUCTIONS WITHIN 80" ABOVE WALKING SURFACE
   - AND IS FREE OF OBJECTS WHICH PROTRUDE MORE THAN 4" BETWEEN THE HEIGHTS OF 27" AND 80" ABOVE THE WALKING SURFACE.
3. ALL DOORS, DOORWAYS & GATES IN PATH OF TRAVEL MUST COMPLY WITH EXIT DOOR REQUIREMENTS SECTION 11B-404. PROVIDE LEVER HARDWARE, KICK PLATES, 5 lbs PRESURE TO OPERATE, 24" MIN. STRIKE SIDE CLEARANCE, 48" MAX. WIDTH, AND PANIC GARDWARE IF REQUIRED BY FIRE LIFE SAFETY.
4. THERE IS NO DROP-OFF OVER 4" AT THE EDGE OF WALK OR LANDING. IN NEW CONSTRUCTION, ALL WALKS AND ROUTES ARE CONSIDERED PATH OF TRAVEL (P.O.T.) ARCHITECT AND CONTRACTOR SHALL VERIFY THAT THE ENTIRE PATH OF TRAVEL HAS BEEN CONSTRUCTED FREE OF BARRIERS.
5. ALL ACCESSIBLE PARKING SPACES ARE LOCATED SO THAT A PERSON WITH DISABILITY IS NOT COMPELLED TO WHEEL OR WALK BEHIND ANY OTHER CAR.
6. WALKS IN PATH OF TRAVEL SHALL BE FREE OF GRATINGS WHENEVER POSSIBLE. WHEN INSTALLED, OPENINGS SHALL BE 1/2" MAXIMUM IN DIRECTION OF TRAFFIC FLOW.

DSA PR-15-01

DESIGN PROFESSIONAL IN GENERAL RESPONSIBLE CHARGE STATEMENT:

THE POT IDENTIFIED IN THESE CONSTRUCTION DOCUMENTS IS COMPLIANT WITH CURRENT APPLICABLE CALIFORNIA BUILDING CODE ACCESSIBILITY PROVISIONS FOR PATH OF TRAVEL REQUIREMENTS FOR ALTERATIONS AND STRUCTURAL REPAIRS. AS PART OF THE DESIGN OF THIS PROJECT, THE POT WAS EXAMINED AND ANY ELEMENTS, COMPONENTS OR PORTION OF THE POT THAT WERE DETERMINED TO BE NONCOMPLIANT 1) HAVE BEEN IDENTIFIED AND 2) THE CORRECTIVE WORK NECESSARY TO BRING THEM INTO COMPLIANCE HAS BEEN INCLUDED WITHIN THE SCOPE OF THIS PROJECT'S WORK THROUGH DETAILS, DRAWINGS, AND SPECIFICATIONS INCORPORATED INTO THESE CONSTRUCTION DOCUMENTS. ANY NONCOMPLIANT ELEMENTS, COMPONENTS OR PORTION OF THE POT THAT WILL NOT BE CORRECTED BY THIS PROJECT BASED ON VALUATION THRESHOLD LIMITATIONS OR A FINDING OF UNREASONABLE HARDSHIP ARE SO INDICATED IN THESE CONSTRUCTION DOCUMENTS.

DURING CONSTRUCTION, IF POT ITEMS WITHIN SCOPE OF THE PROJECT REPRESENTED AS CODE COMPLIANT ARE FOUND TO BE NONCONFORMING BEYOND REASONABLE CONSTRUCTION TOLERANCES, THEY SHALL BE BROUGHT INTO COMPLIANCE WITH THE CBC AS A PART OF THIS PROJECT BY MEANS OF A 'CONSTRUCTION CHANGE DOCUMENT' (FORM DSA 140)

SIMPBK
7581 NORTH INGRAM AVENUE #101 - FRESNO, CALIFORNIA 93711
T559.448.8400 - F559.448.8487 - www.sim-pbk.com

LICENSED ARCHITECT — DAVID MICHAEL IWANAGA — C 17199 — 3-31-19 RENEWAL DATE — STATE OF CALIFORNIA

IDENTIFICATION STAMP
DIV. OF THE STATE ARCHITECT
02-117909
APP'D: FLS RS JI
DATE 7/23/18

FILE: 5462
PIN: 72009-05

Monson-Sultana School

PROJECT NAME
MONSON-SULTANA ELEMENTARY RELOCATABLE
10643 AVENUE 416, SULTANA, CA 93666

PROJECT DEVELOPMENT DATE	DESCRIPTION	REVISIONS No.	DATE	DESCRIPTION
.	.	.	.	.
.	.	.	.	.

SHEET NAME
OVERALL SITE PLAN

PROJECT ARCHITECT	PROJECT NUMBER	SHEET NUMBER
DAVID IWANAGA	18-28	A1
DRAWN BY	SCALE	
.	AS NOTED	
CHECKED BY	DATE	
.	07.17.18	

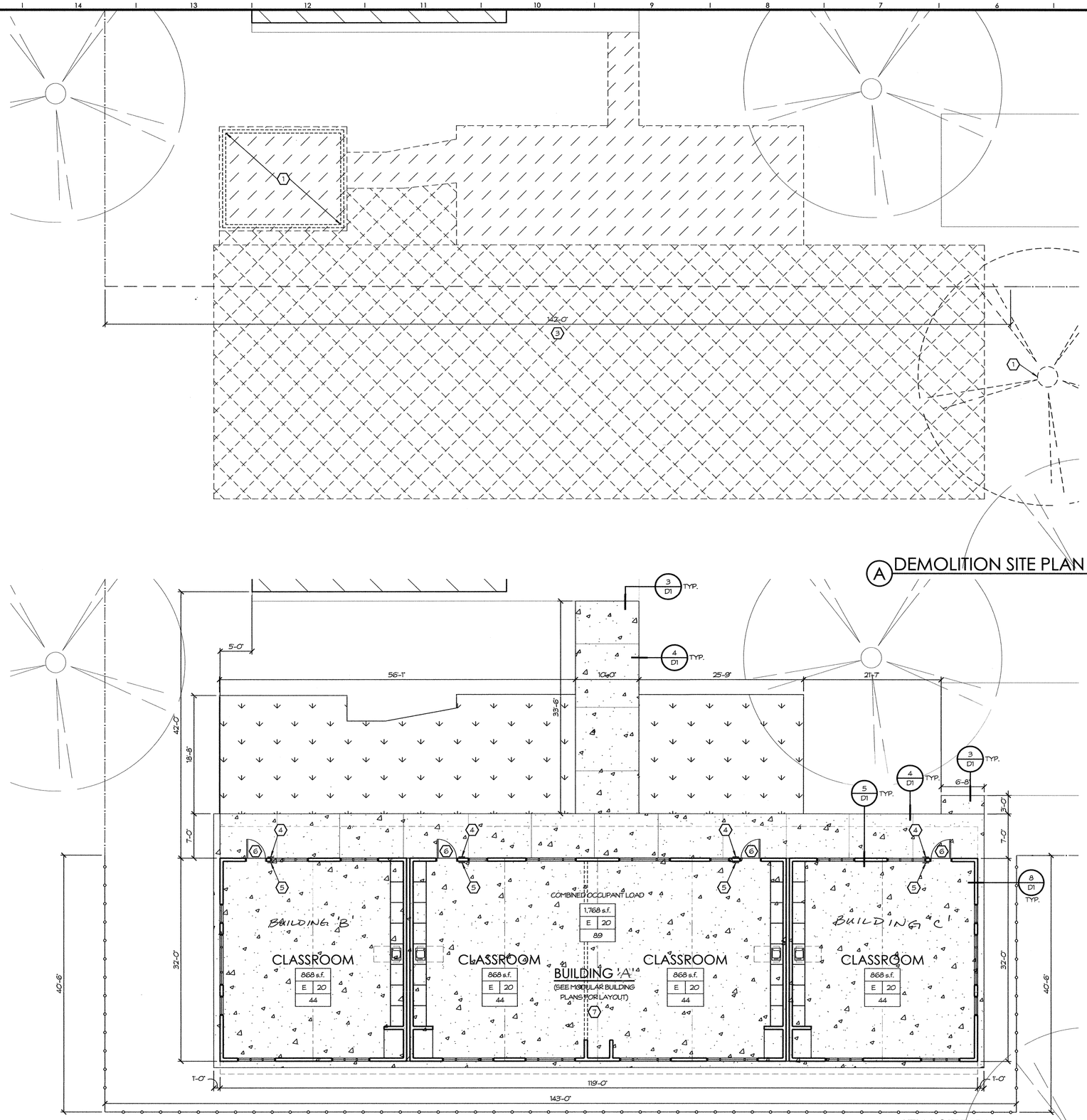

A DEMOLITION SITE PLAN
1/16" = 1'-0"

B NEW SITE PLAN
1/16" = 1'-0"

KEYNOTES

1. REMOVE (E) TREE & ROOTS, TYP. ANY TREES AND/OR ROOTS INTERFERING WITH AREA OF NEW WORK.
2. REMOVE EXISTING SHED
3. REMOVE SECTION OF EXISTING CHAIN LINK FENCE TO NEAREST MAIN POST. (V.I.F.)
4. NEW ENTRANCE DOOR SIGNAGE, SEE DETAIL #20/D2
5. NEW EXIT DOOR SIGNAGE, SEE DETAIL #21/D2
6. NEW DOOR BY MODULAR BUILDING CONTRACTOR. PROVIDE DOOR MANEUVERING CLEARANCES PER DETAIL #15/D1
7. NEW CONCRETE FOUNDATION SLAB BY MODULAR CONTRACTOR

LEGEND

- EXISTING CHAIN-LINK FENCE
- NEW CHAIN-LINK FENCE, SEE DETAIL 27/D2
- EXISTING CONCRETE TO BE REMOVED AND PREP TO ACCOMMODATE NEW CONSTRUCION. (V.I.F.)
- NEW GRASS/ TURF
- EXISTING DIRT AREA TO BE CLEARED AND PREP TO ACCOMMODATE NEW CONSTRUCION. (V.I.F.)
- NEW CONCRETE, SEE DETAIL 1/D1 FOR CRACK CONTROL & 2/D1 FOR EXPANSION JOINTS

EXIT ANALYSIS LEGEND

ROOMNAME
- ROOM NAME
- ROOM AREA (SQ. FT.)
- OCCUPANCY CLASS
- OCCUPANT LOAD FACTOR
- ROOM OCCUPANTS

- COMBINED EXIT LOAD SERVED (AT APPLICABLE EXIT)
- REQUIRED CLEAR EXIT WIDTH IN INCHES (AT APPLICABLE EXIT)
- PROVIDED CLEAR EXIT WIDTH IN INCHES (AT APPLICABLE EXIT)

SIMPBK
7591 NORTH INGRAM AVENUE #101 · FRESNO, CALIFORNIA 93711
T559.448.8400 · F559.448.8467 · www.sim-pbk.com

LICENSED ARCHITECT
DAVID MICHAEL IWANAGA
C 17199
3-31-19
RENEWAL DATE
STATE OF CALIFORNIA

IDENTIFICATION STAMP
DIV. OF THE STATE ARCHITECT
02-117009
AC FLS SS
DATE 7/23/18

FILE: 54-62
PTN: 72009-05

Monson-Sultana School

PROJECT NAME
MONSON-SULTANA ELEMENTARY RELOCATABLE
10643 AVENUE 416, SULTANA, CA 93666

DATE	DESCRIPTION	PROJECT DEVELOPMENT	No.	DATE	DESCRIPTION	REVISIONS

SHEET NAME
DEMOLITION AND NEW SITE PLANS

PROJECT ARCHITECT: DAVID IWANAGA	PROJECT NUMBER: 18-28		SHEET NUMBER: A2
DRAWN BY:	SCALE: AS NOTED		
CHECKED BY:	DATE: 07.17.18		

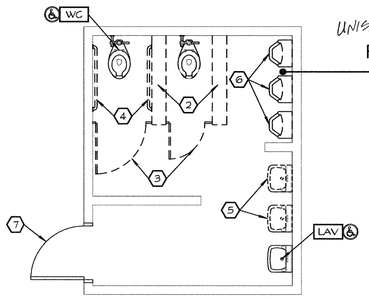

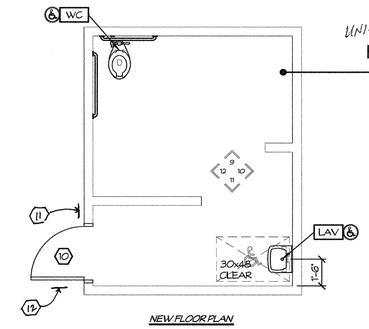

C ACCESSIBLE STAFF RESTROOM - UNISEX

1/4" = 1'-0"

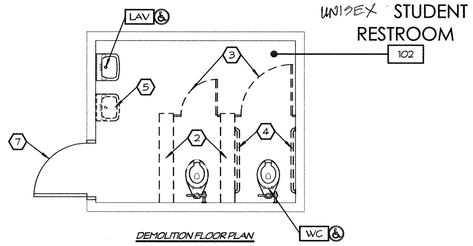

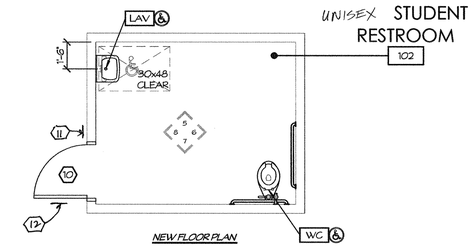

B ACCESSIBLE STUDENT RESTROOM - UNISEX

1/4" = 1'-0"

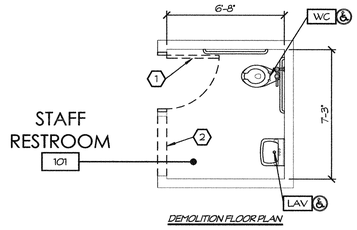

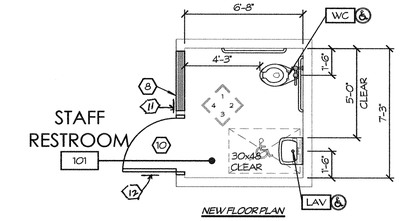

A ACCESSIBLE STAFF RESTROOM

1/4" = 1'-0"

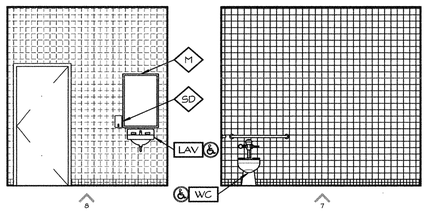

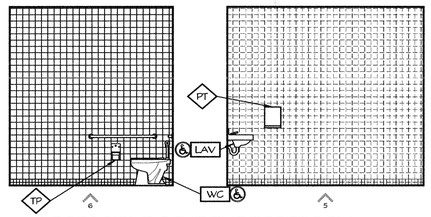

ACCESSIBLE STUDENT RESTROOM - UNISEX

102

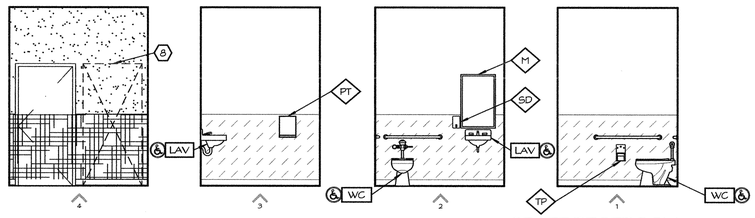

STAFF RESTROOM

101

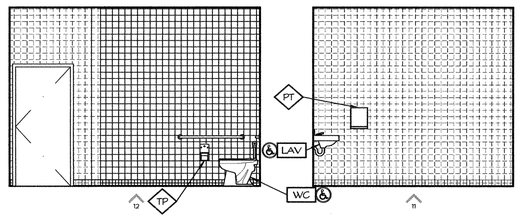

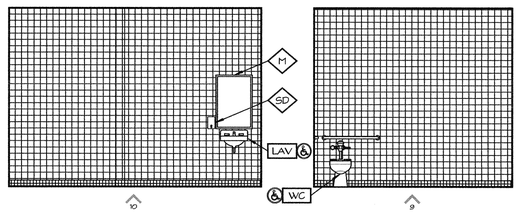

ACCESSIBLE STAFF RESTROOM - UNISEX

103

KEYNOTES

1. REMOVE EXISTING DOOR & FRAME.
2. REMOVE EXISTING WALL
3. REMOVE EXISTING PARTITION & DOOR
4. REMOVE EXISTING GRAB BARS
5. REMOVE EXISTING SINK
6. REMOVE EXISTING URINAL
7. EXISTING DOOR TO REMAIN
8. NEW WALL INFILL, SEE DETAIL 35/D2
9. NEW RUBBER TOPSET BASE (MATCH EXISTING)
10. PROVIDE DOOR MANEUVERING CLEARANCES PER DETAIL 15/D1

GENERAL NOTE:
REMOVE EXISTING FIXTURES AS SHOWN AND CAP ALL UNUSED PIPING BELOW FLOOR, ABOVE CEILING, OR IN WALL.

11. NEW TACTILE RESTROOM SIGNAGE, SEE DETAIL 30/D2
12. NEW RESTROOM IDENTIFICATION SYMBOLS, SEE DETAIL 30/D2

FIXTURE LEGEND

LAV (E) WALL HUNG LAVATORY. SEE DETAIL 28/D2

WC (E) WATER CLOSET

SYMBOL INDICATES ACCESSIBLE FIXTURE SEE DETAIL 38/D2 FOR TYPICAL ACCESSIBILITY STANDARDS CLEARANCES AND MOUNTING HEIGHTS

NOTE:
FOR MINIMUM REQUIRED CLEARANCES, GRAB BAR SIZES AND STANDARDS SEE DETAIL 38/D2 TYPICAL ACCESSIBILITY STANDARDS.

ACCESSORIES LEGEND

SD SOAP DISPENSER
TP TOILET PAPER DISPENSER
PT PAPER TOWEL DISPENSER, SEE DETAIL 31/D2
GB GRAB BAR, SEE DETAIL 29/D2
M MIRROR

NOTE:
FOR MAXIMUM RESTROOM ACCESSORY HEIGHTS AND PROJECTIONS SEE DETAIL 38/D2 TYPICAL ACCESSIBILITY STANDARDS, TOILET ROOM ACCESSORIES.

FINISH LEGEND

- NEW GYP. BOARD FINISH - PAINT
- NEW FRP FINISH
- NEW TILE WALL FINISH
- NEW TILE WALL BASE
- EXISTING TILE WALL FINISH
- EXISTING TILE WALL BASE
- EXISTING FRP FINISH

MATCH EXISTING ADJACENT FINISHES - PAINT COLOR

SIMPBK
7591 NORTH INGRAM AVENUE #101 · FRESNO, CALIFORNIA 93711
T559.448.8400 · F559.448.8467 · www.sim-pbk.com

LICENSED ARCHITECT
DAVID MICHAEL IWANAGA
C 17199
3-31-19
RENEWAL DATE
STATE OF CALIFORNIA

IDENTIFICATION STAMP
DIV. OF THE STATE ARCHITECT
02-117009
AC FS DS
DATE 7/23/18

REF: 5442
PTN: 72009-05

Monson-Sultana School

PROJECT NAME
MONSON-SULTANA ELEMENTARY RELOCATABLE
10643 AVENUE 416, SULTANA, CA 93666

DATE	DESCRIPTION	PROJECT DEVELOPMENT	No.	DATE	DESCRIPTION	REVISIONS

SHEET NAME
DEMOLITION AND NEW ACCESSIBLE RESTROOMS

PROJECT ARCHITECT	PROJECT NUMBER	SHEET NUMBER
DAVID IWANAGA	18-28	A3
DRAWN BY	SCALE	
	AS NOTED	
CHECKED BY	DATE	
	07.17.18	

e:\18-28 monson-sultana_jr\archwork\18-28_a3 enlarged demo new.dwg | DEMO & NEW | 2018.07.23 17:15 | jspond

19 SIGNS AND IDENTIFICATION

IDENTIFICATION SIGNS
WHEN SIGNS IDENTIFY PERMANENT ROOMS AND SPACES OF A BUILDING OR SITE, THEY SHALL COMPLY WITH REQUIREMENTS FOR; FINISH AND CONTRAST, PROPORTIONS, RAISED CHARACTERS AND PICTORIAL SYMBOLS, BRAILLE, & MOUNTING LOCATION AND HEIGHT

DIRECTIONAL AND INFORMATIONAL SIGNS
WHEN SIGNS DIRECT TO OR GIVE INFORMATION ABOUT PERMANENT ROOMS AND FUNCTIONAL SPACES OF A BUILDING OR SITE, THEY SHALL COMPLY WITH REQUIREMENTS FOR; FINISH AND CONTRAST, PROPORTIONS, & CHARACTER HEIGHT.

ACCESSIBILITY SIGNS
WHEN SIGNS IDENTIFY, DIRECT TO OR GIVE INFORMATION ABOUT ACCESSIBLE ELEMENTS AND FEATURES OF A BUILDING OR SITE, THEY SHALL INCLUDE THE APPROPRIATE SYMBOL OF ACCESSIBILITY (PROPORTIONS SHALL MATCH CBC FIGURE 11B-6) AND SHALL COMPLY WITH FUNCTIONAL SPACES OF A BUILDING OR SITE. THEY SHALL COMPLY WITH REQUIREMENTS FOR; FINISH AND CONTRAST, & INTERNATIONAL SYMBOL OF ACCESSIBILITY

MOUNTING LOCATION AND HEIGHT
WHERE PERMANENT IDENTIFICATION SIGNS ARE PROVIDED FOR ROOMS AND SPACES, SIGNS SHALL BE INSTALLED ON THE WALL ADJACENT TO THE LATCH SIDE OF THE DOOR. DOUBLE DOORS WITH ONE ACTIVE LEAF SHALL HAVE SIGNAGE LOCATED ON THE INACTIVE LEAF. WHERE THERE IS NO WALL SPACE ON THE LATCH SIDE, INCLUDING AT DOUBLE LEAF DOORS, SIGNS SHALL BE PLACED ON THE NEAREST ADJACENT WALL, PREFERABLY ON THE RIGHT.

WHERE PERMANENT IDENTIFICATION SIGNAGE IS PROVIDED FOR ROOMS AND SPACES THEY SHALL BE LOCATED ON THE APPROACH SIDE OF THE DOOR AS ONE ENTERS THE ROOM OR SPACE. SIGNS THAT IDENTIFY EXITS SHALL BE LOCATED ON THE APPROACH SIDE OF THE DOOR AS ONE EXITS THE ROOM OR SPACE. A CLEAR FLOOR SPACE OF 18" MIN. X 18" MIN., CENTERED ON TACTILE CHARACTERS, SHALL BE PROVIDED BEYOND THE ARC OF ANY DOOR SWING BETWEEN THE CLOSED POSITION AND 45° OPEN POSITION.

RAISED CHARACTERS
WHEN RAISED CHARACTERS ARE REQUIRED SIGNS, THEY SHALL CONFORM TO CBC 11B-703.2

A. *CHARACTER TYPE:*
CHARACTERS ON SIGNS SHALL BE RAISED 1/32 INCH MINIMUM AND SHALL BE SANS SERIF UPPERCASE CHARACTERS ACCOMPANIED BY CONTRACTED (GRADE 2) BRAILLE. STROKE THICKNESS OF THE UPPERCASE LETTER 'I' SHALL BE 15%MAXIMUM OF THE HEIGHT OF THE CHARACTER. THE FONT SHALL HAVE PROPORTIONS WHERE THE WIDTH OF THE UPPERCASE LETTER 'O' IS 60%MINIMUM AND 110%MAXIMUM OF THE HEIGHT OF THE UPPERCASE LETTER 'I'.

B. *CHARACTER SIZE:*
CHARACTER HEIGHT MEASURED VERTICALLY FROM THE BASELINE OF THE CHARACTER SHALL BE 5/8 INCH MINIMUM AND 2 INCHES MAXIMUM BASED ON THE HEIGHT OF THE UPPERCASE LETTER 'I'.

C. *CHARACTER SPACING:*
SPACING SHALL MEASURED FROM TWO CLOSEST POINTS OF ADJACENT RAISED CHARACTERS WITHIN A MESSAGE, EXCLUDING WORD SPACES. WHERE CHARACTERS HAVE A RECTANGULAR CROSS SECTION THE SPACE BETWEEN CHARACTERS SHALL BE 1/8 INCH MINIMUM AND 4 TIMES THE RAISED CHARACTER STROKE WIDTH MAXIMUM. WHERE CHARACTERS HAVE OTHER CROSS SECTIONS THE SPACING BETWEEN INDIVIDUAL RAISED CHARACTERS SHALL BE 1/16 INCH MINIMUM AND 4 TIMES THE RAISED CHARACTER STROKE WIDTH MAXIMUM AT THE BASE OF THE CROSS SECTION, AND 1/8 INCH MINIMUM AND 4 TIMES THE CHARACTER STROKE WIDTH MAXIMUM AT THE TOP OF THE CROSS SECTIONS. CHARACTERS SHALL BE SEPARATED FROM RAISED BORDERS AND DECORATIVE ELEMENTS BY 3/8 INCH MINIMUM.

D. *LINE SPACING:*
SPACING BETWEEN THE BASELINES OF SEPARATE LINES OR FAISED CHARACTERS SHALL BE 135%MINIMUM TO 170%MAXIMUM OF THE RAISED CHARACTER HEIGHT.

E. *CHARACTER PLACEMENT:*
CHARACTERS AND BRAILLE SHALL BE IN A HORIZONTAL FORMAT.

BRAILLE
BRAILLE SHALL BE CONTRACTED (GRADE 2)

DIMENSIONS AND CAPITALIZATION
BRAILLE DOTS SHALL HAVE A DOMED OR ROUNDED SHAPE AND SHALL COMPLY WITH TABLE BELOW. THE INDICATION OF AN UPPERCASE LETTER OR LETTERS SHALL ONLY BE USED BEFORE THE FIRST WORD OF SENTENCES, PROPER NOUNS AND NAMES, INDIVIDUAL LETTERS OF THE ALPHABET, INITIALS, AND ACRONYMS.

POSITION
BRAILLE SHALL BE POSITIONED BELOW THE CORRESPONDING TEXT IN A HORIZONTAL FORMAT, FLUSH LEFT OR CENTERED. IF TEXT IS MULTI-LINED, BRAILLE SHALL BE PLACED BELOW THE ENTIRE TEXT. BRAILLE SHALL BE SEPARATED 3/8 INCH MINIMUM AND 1/2 INCH MAXIMUM FROM ANY OTHER TACTILE CHARACTERS AND 3/8 INCH MINIMUM FROM RAISED BORDERS AND DECORATIVE ELEMENTS.

BRAILLE DIMENSIONS

MEASUREMENT RANGE	MINIMUM(INCHES) MAXIMUM(INCHES)
DOT BAASE DIAMETER	0.059 TO 0.063
DISTANCE BETWEEN TWO DOTS IN THE SAME CELL	0.100
DISTANCE BETWEEN CORRESPONDING DOTS IN ADJACENT CELLS	0.300
DOT HEIGHT	0.025 TO 0.037
DISTANCE BETWEEN CORRESPONDING DOTS FROM ONE CELL DIRECTLY BELOW	0.395 TO 0.400

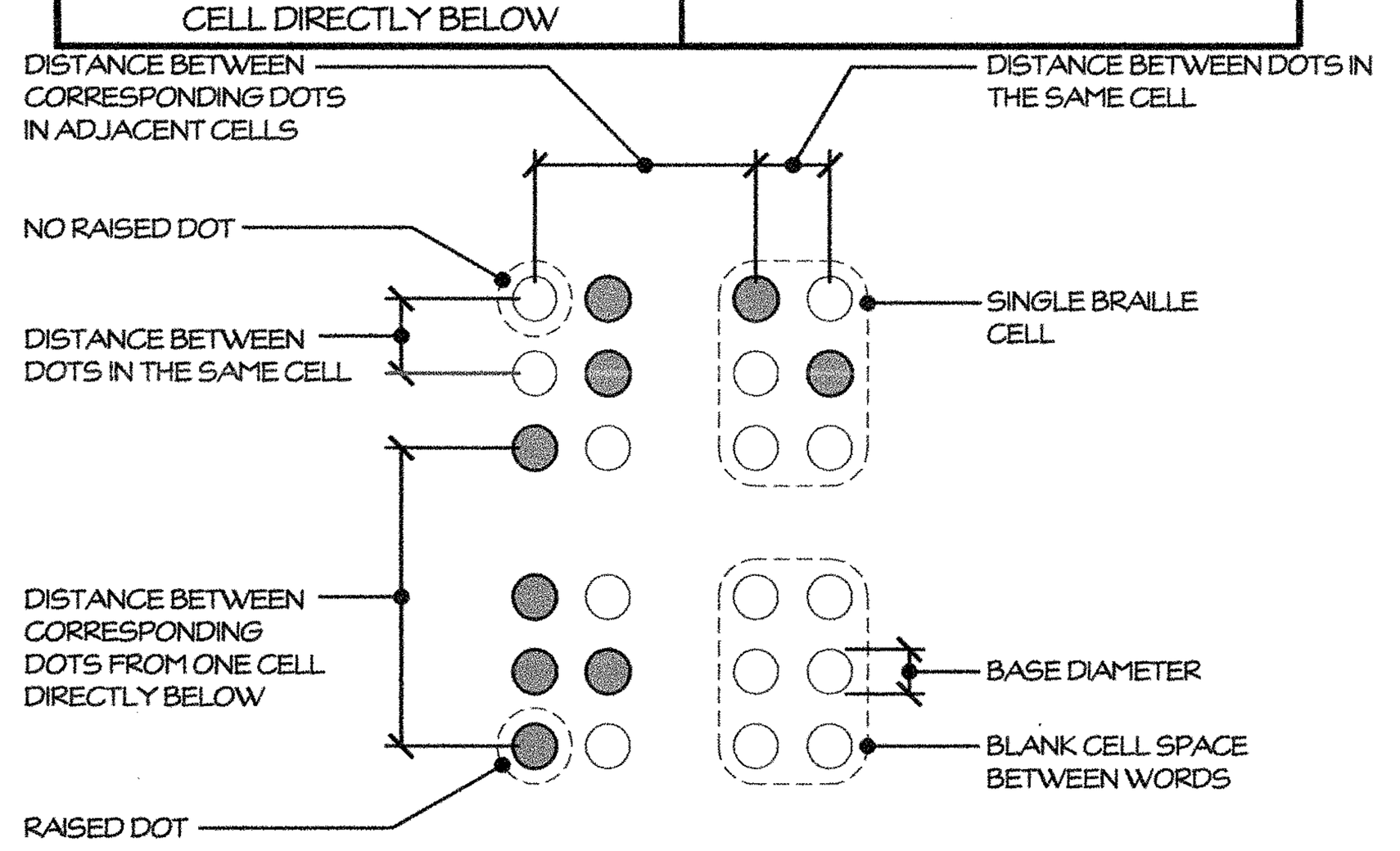

BRAILLE MEASUREMENT

VISUAL CHARACTERS

A. *FINISH AND CONTRAST*
CHARACTERS, SYMBOLS AND THEIR BACKGROUND SHALL HAVE A NONGLARE FINISH. CHARACTERS AND SYMBOLS SHALL CONTRAST WITH THEIR BACKGROUND, EITHER LIGHT ON A DARK BACKGROUND OR DARK ON A LIGHT BACKGROUND.

B. *PROPORTIONS*
VISUAL CHARACTERS ON SIGNS SHALL BE SELECTED FROM FONTS WHERE THE WIDTH OF THE UPPERCASE 'O' IS 60 PERCENT MINIMUM AND 110 PERCENT MAXIMUM ON THE HEIGHT OF THE UPPERCASE I'. STROKE THICKNESS OF THE UPPERCASE 'I' SHALL BE 10 PERCENT MINIMUM AND 20 PERCENT MAXIMUM OF THE HEIGHT OF THE CHARACTER.

C. *CHARACTER HEIGHT*
VISUAL CHARACTERSSHALL BE SIZED ACCORDING TO THE TABLE BELOW. LOWERCASE CHARACTERS ARE PERMITTED. VIEWING DISTANCE SHALL BE MEASURED AS THE HORIZONTAL DISTANCE BETWEEN THE CHARACTER AND AN OBSTRUCTION PREVENTING FURTHER APPROACH TOWARDS THE SIGN. CHARACTER HEIGHT SHALL BE BASED ON THE UPPERCASE LETTER 'I'.

D. *CHARACTER HEIGHT FROM FINISH FLOOR:*
VISUAL CHARACTERS SHALL BE 40 INCHES MINIMUM ABOVE THEFINISH FLOOR OR GROUND

E. *CHARACTER SPACING*
CHARACTER SPACING SHALL BE MEASURED BETWEEN THE TWO CLOSEST POINTS OF ADJACENT CHARACTERS, EXCLUDING WORD SPACES. SPACING BETWEEN INDIVIDUAL CHARACTERS SHALL BE 10 PERCENT MINIMUM AND 35 PER-CENT MAXIMUM OF CHARACTER HEIGHT.

F. *LINE SPACING*
SPACING BETWEEN THE BASELINES OF SEPARATE LINES OR FAISED CHARACTERS SHALL BE 135%MINIMUM TO 170%MAXIMUM OF THE RAISED CHARACTER HEIGHT.

VISUAL CHARACTER HEIGHT

HEIGHT TO FINISH FLOOR OR GROUND FROM BASELINE OF CHARACTER	HORIZONTAL VIEWING DISTANCE	MINIUMU CHARACTER HEIGHT
40" TO LESS THAN OR EQUAL TO 70"	< 72"	5/8"
	> 72"	5/8" PLUS 1/8" PER FOOT OF VIEWING DISTANCE ABOVE 72"
GREATER THAN 70" TO LESS THAN OR EQUAL TO 120"	< 180"	2"
	> 180"	2" PLUS 1/8" PER FOOT OF VIEWING DISTANCE ABOVE 180"
GREATER THAN 120"	< 21'	3"
	> 21'	3" PLUS 1/8" PER FOOT OF VIEWING DISTANCE ABOVE 21'

SCALE: 1/4" = 1'-0"

12 ACCESSIBLE PARKING SYMBOL

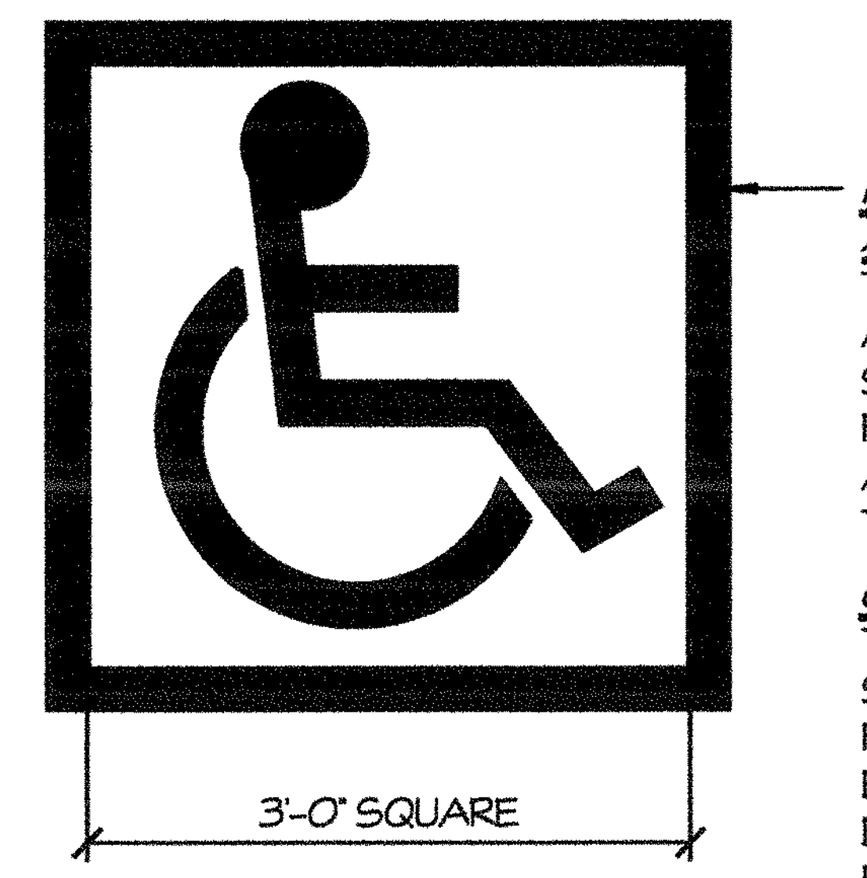

INTERNATIONAL SYMBOL OF ACCESSIBILITY
THE INTERNATIONAL SYMBOL OF ACCESSIBILITY SHALL BE THE STANDARD USED TO IDENTIFY FACILITIES THAT ARE ACCESSIBLE TO AND USABLE BY THE PHYSICALLY DISABLED.

COLOR OF SYMBOL
THE SYMBOL SPECIFIED ABOVE SHALL CONSIST OF A WHITE FIGURE ON A BLUE BACKGROUND. THE BLUE SHALL BE EQUAL TO COLOR No. 15090 IN FEDERAL STANDARD 595B.

SCALE: 3/4" = 1'-0"

13 INTERNATIONAL SYMBOL OF ACCESSIBILITY

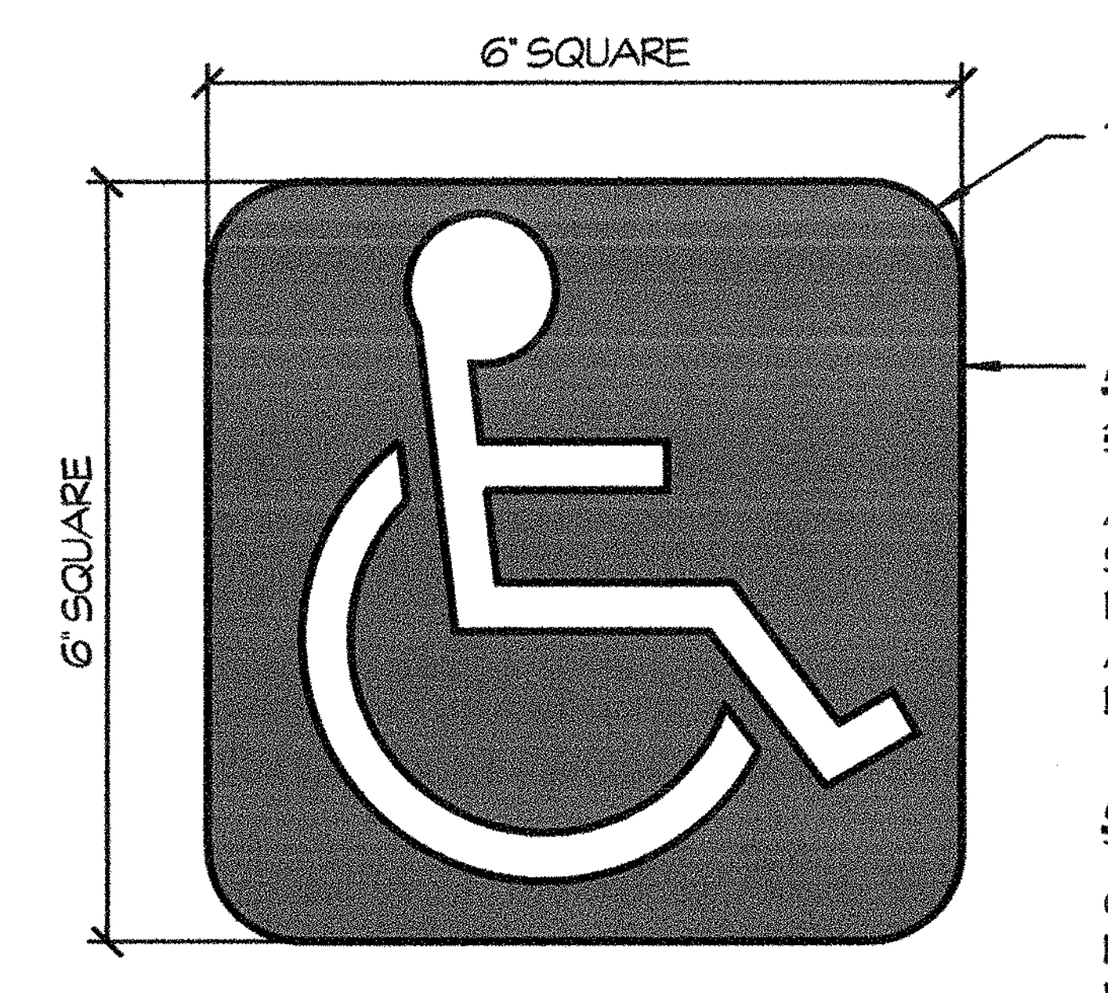

INTERNATIONAL SYMBOL OF ACCESSIBILITY
THE INTERNATIONAL SYMBOL OF ACCESSIBILITY SHALL BE THE STANDARD USED TO IDENTIFY FACILITIES THAT ARE ACCESSIBLE TO AND USABLE BY THE PHYSICALLY DISABLED.

COLOR OF SYMBOL
THE SYMBOL SPECIFIED ABOVE SHALL CONSIST OF A WHITE FIGURE ON A BLUE BACKGROUND. THE BLUE SHALL BE EQUAL TO COLOR No. 15090 IN FEDERAL STANDARD 595B.

SCALE: N.T.S.

14 LOCATION OF TACTILE SIGNS AT DOORS

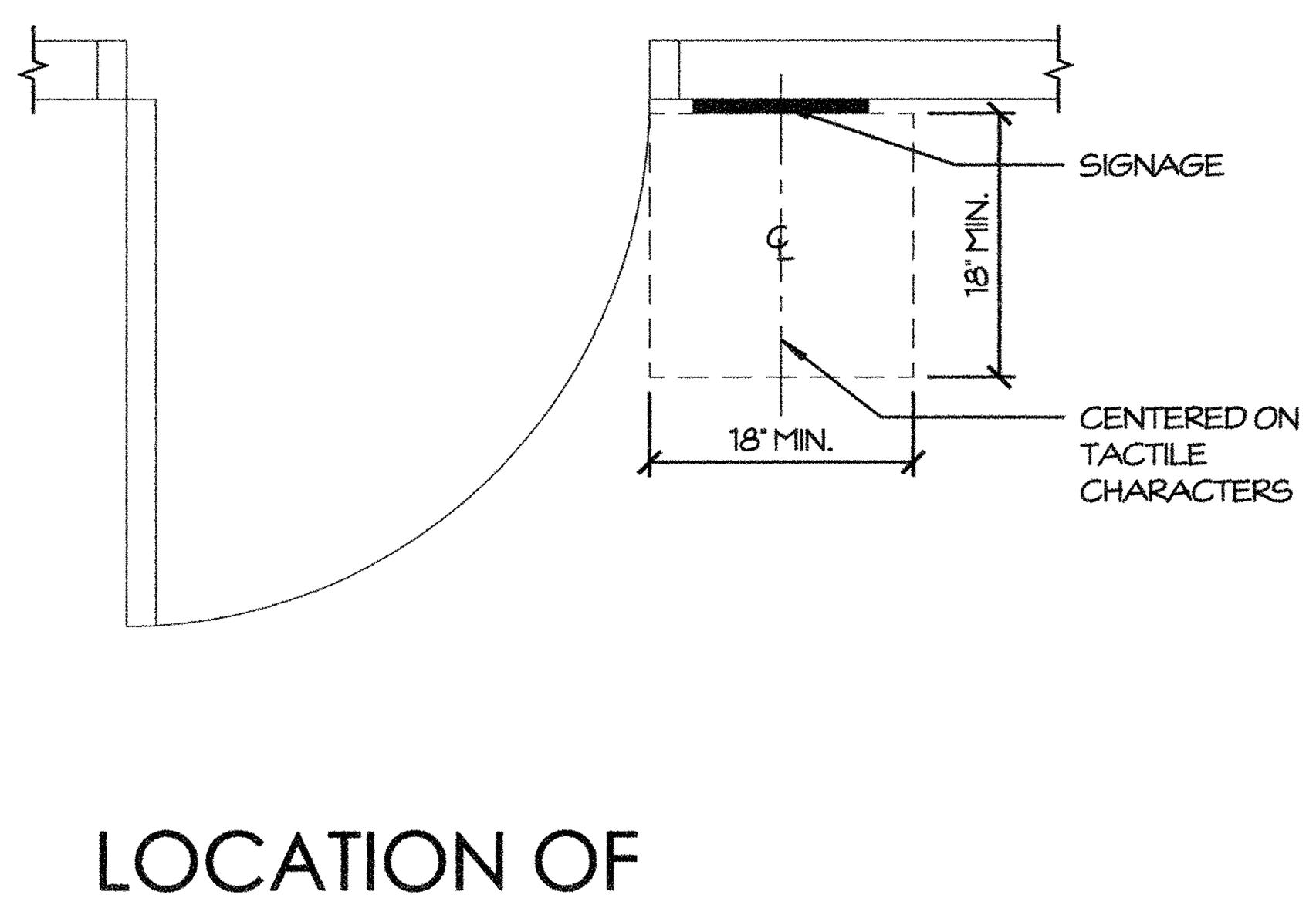

SCALE: 3/4" = 1'-0"

15 DOOR/GATE MANEUVERING CLEARANCES AND LANDINGS

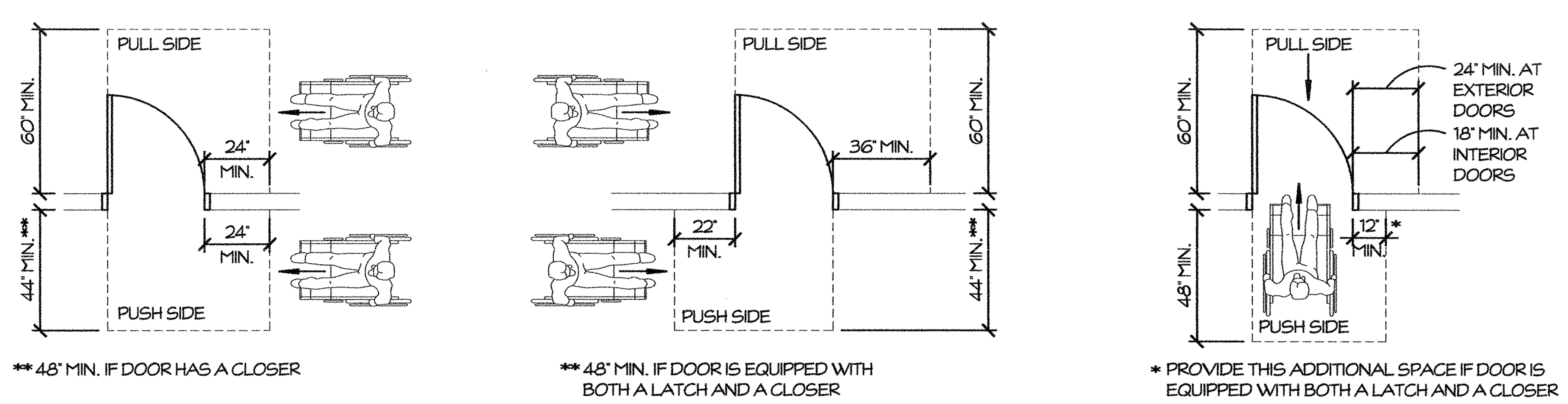

NOTE:
THE FLOOR OR GROUND AREA WITHIN THE REQUIRED CLEARANCES SHALL BE LEVEL AND CLEAR.
LEVEL AREA IS A SPECIFIED SURFACE THAT DOES NOT HAVE A SLOPE IN ANY DIRECTION EXCEEDING 2%SLOPE

SCALE: 1/4" = 1'-0"

8 CONCRETE MOW STRIP AT WALL

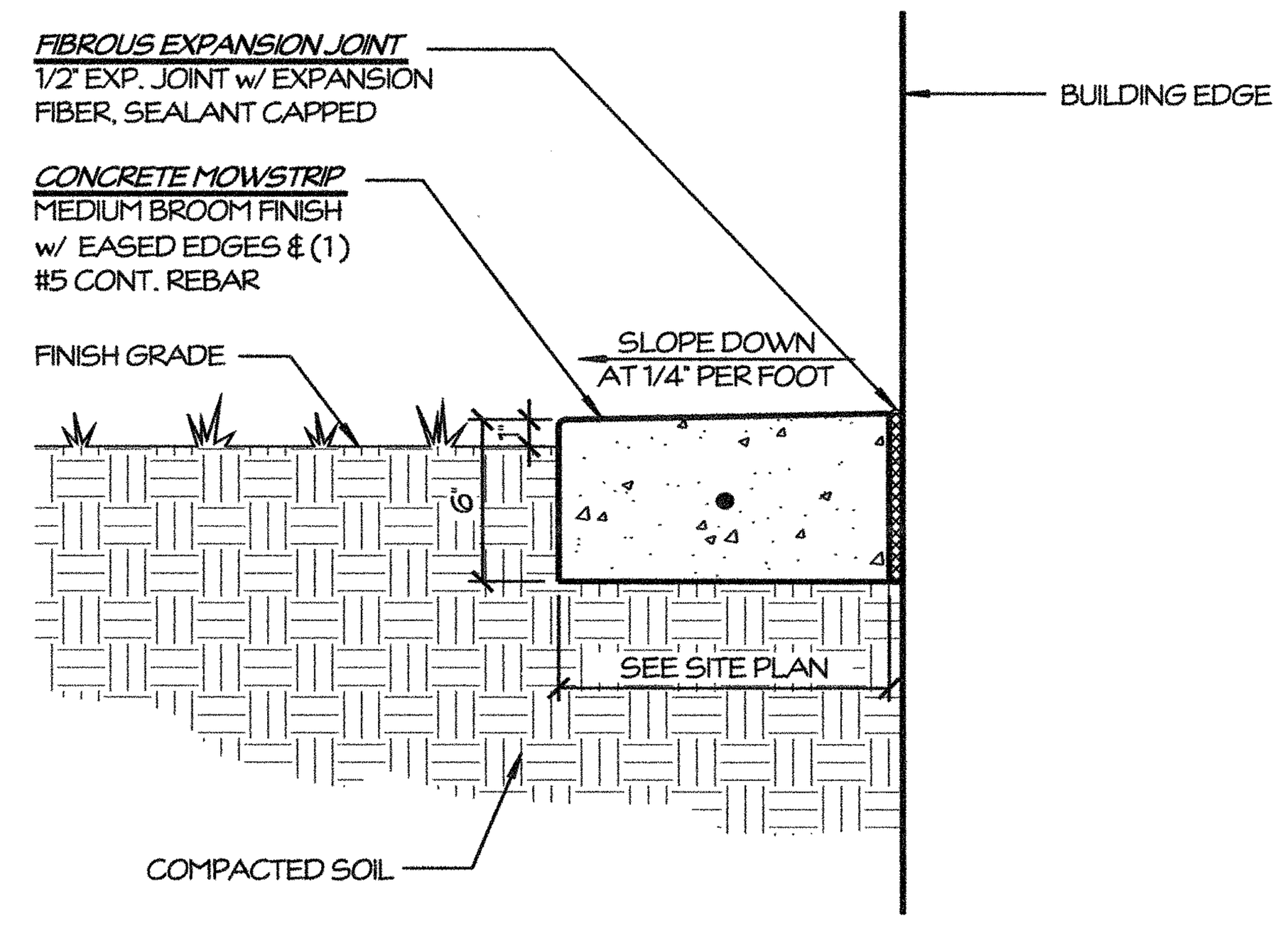

SCALE: 1 1/2" = 1'-0"

9 PARKING SIGNAGE

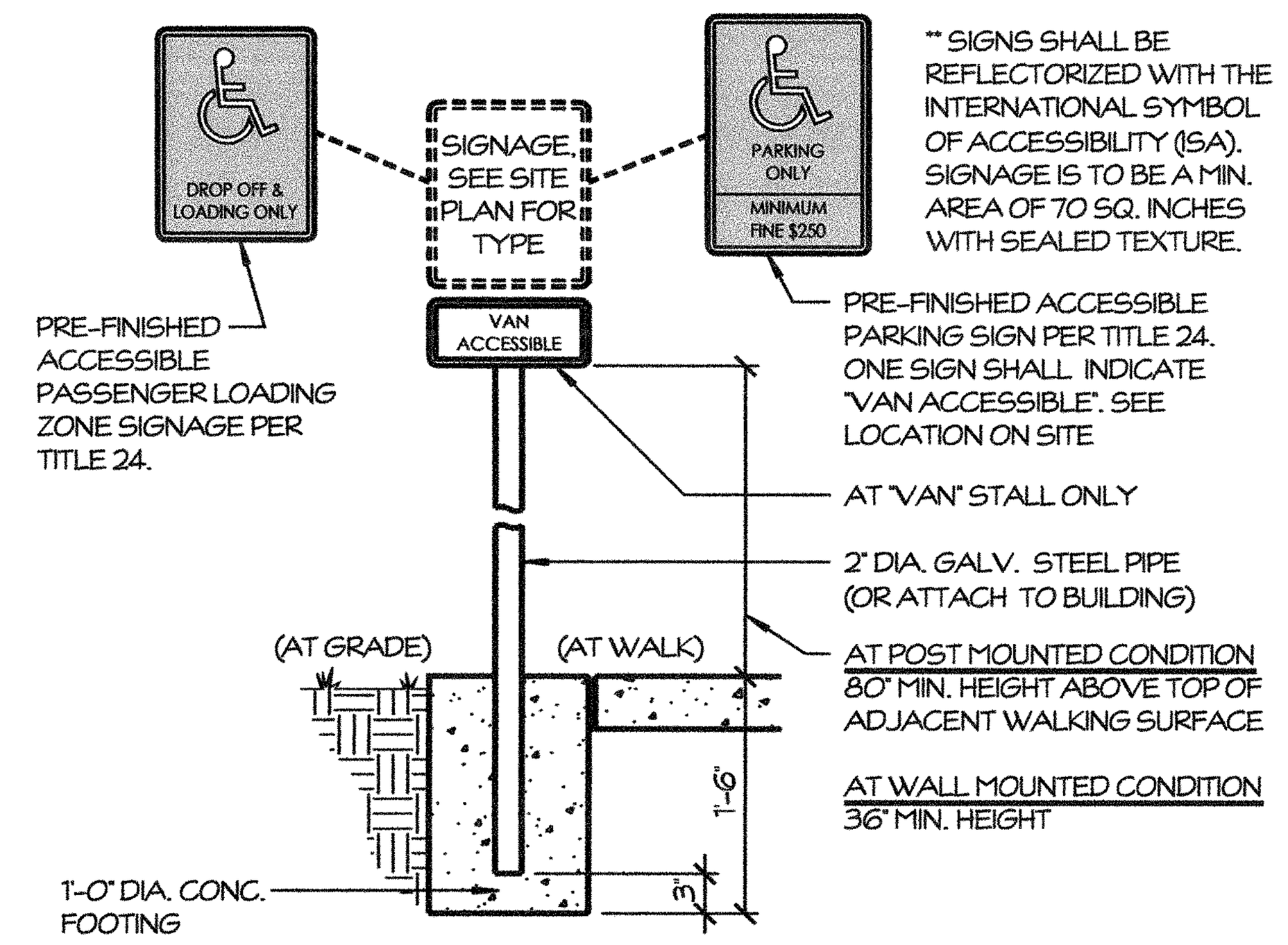

** SIGNS SHALL BE REFLECTORIZED WITH THE INTERNATIONAL SYMBOL OF ACCESSIBILITY (ISA). SIGNAGE IS TO BE A MIN. AREA OF 70 SQ. INCHES WITH SEALED TEXTURE.

SCALE: 3/4" = 1'-0"

10 ACCESSIBLE PARKING

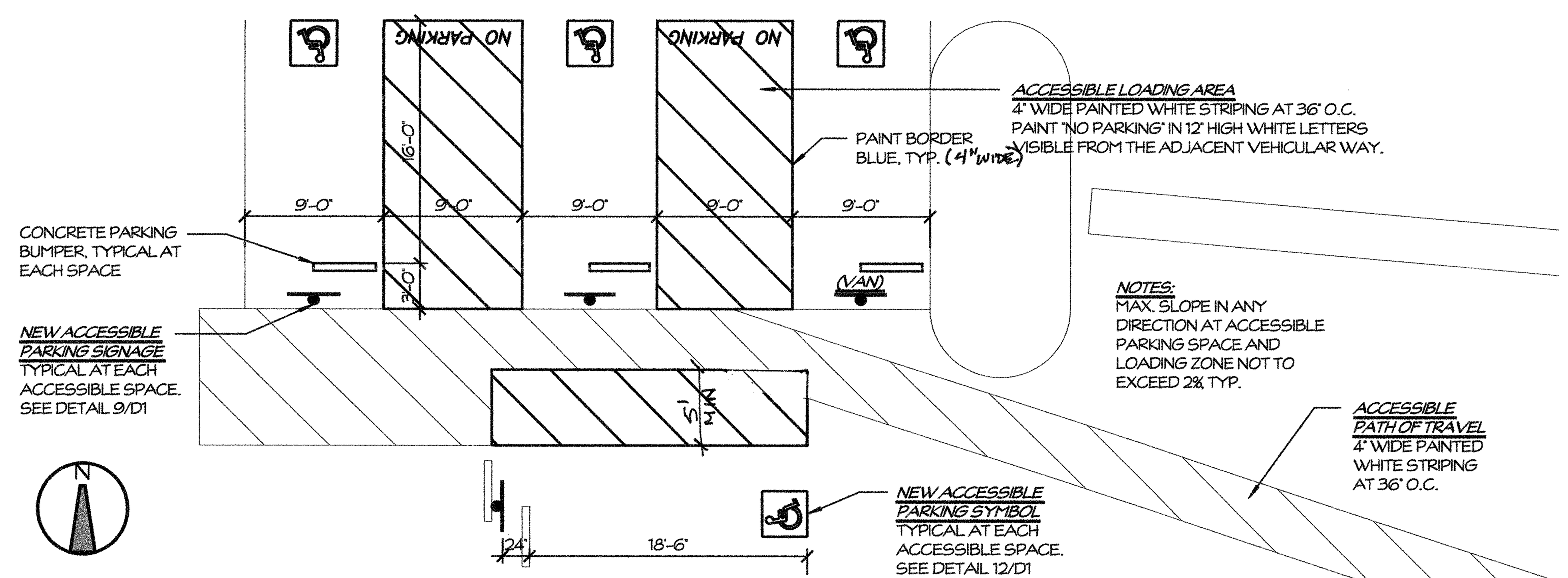

SCALE: 1/8" = 1'-0"

4 CONCRETE WALK AT GRADE

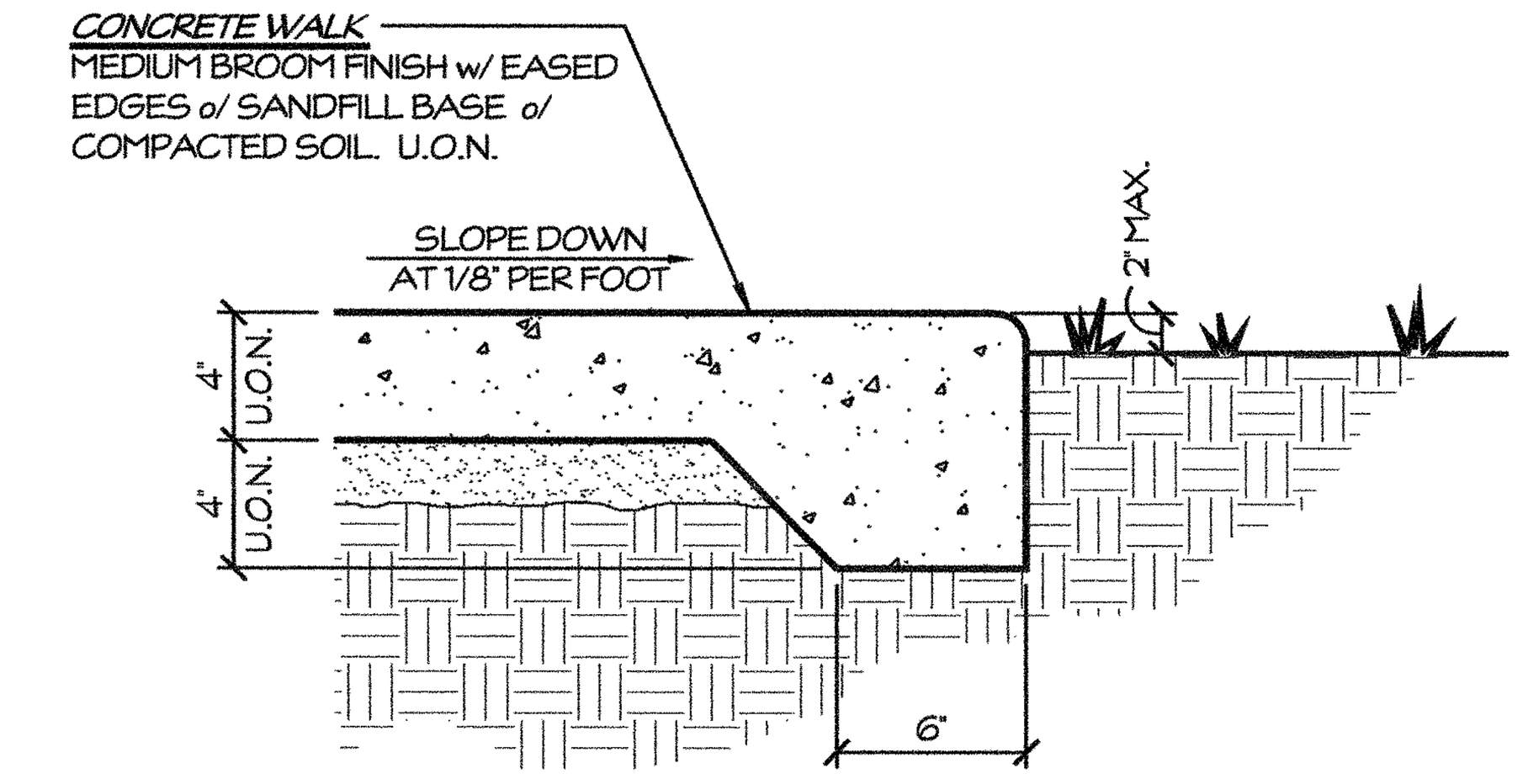

SCALE: 1 1/2" = 1'-0"

5 CONCRETE WALK AT WALL

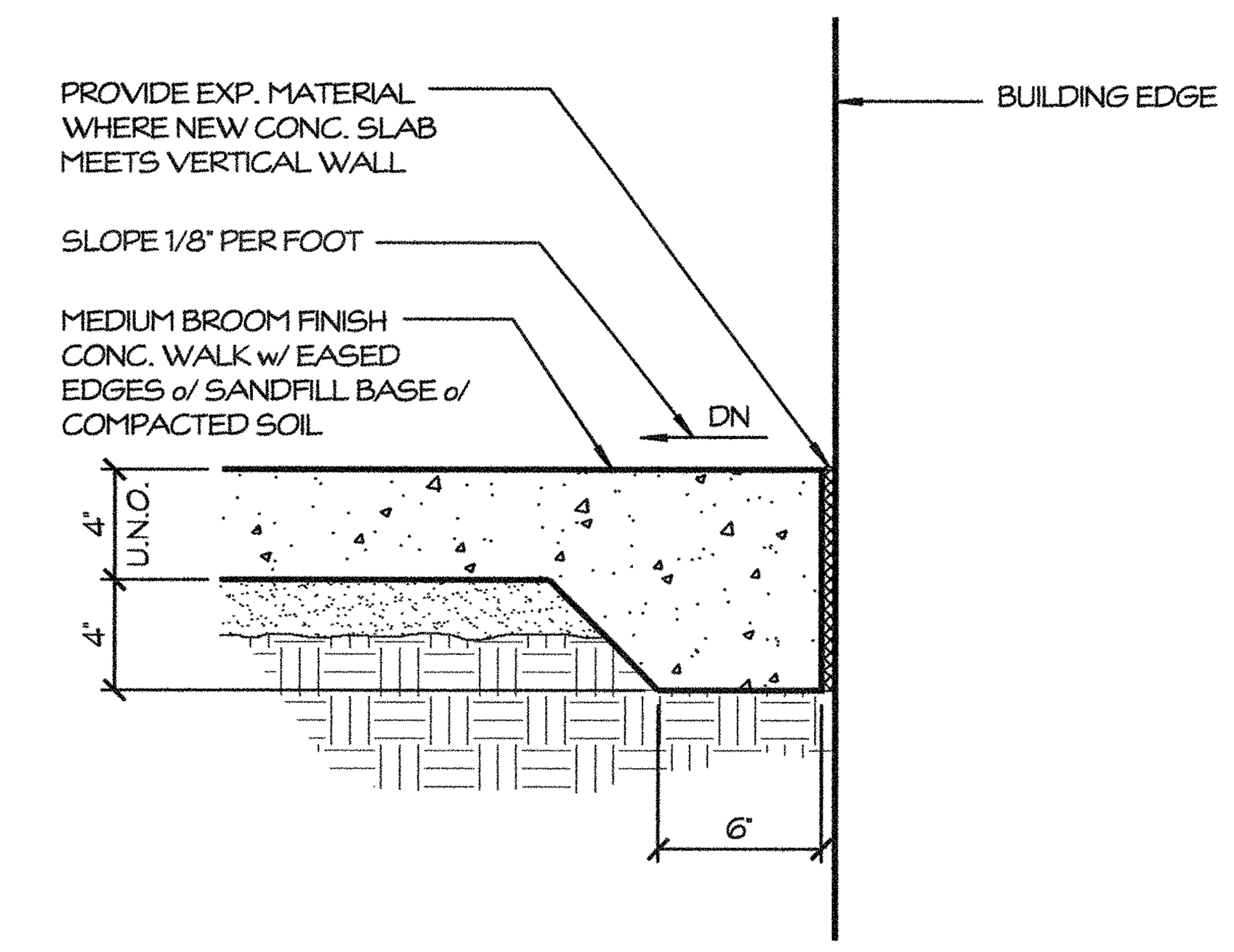

SCALE: 1 1/2" = 1'-0"

1 CRACK CONTROL JOINT

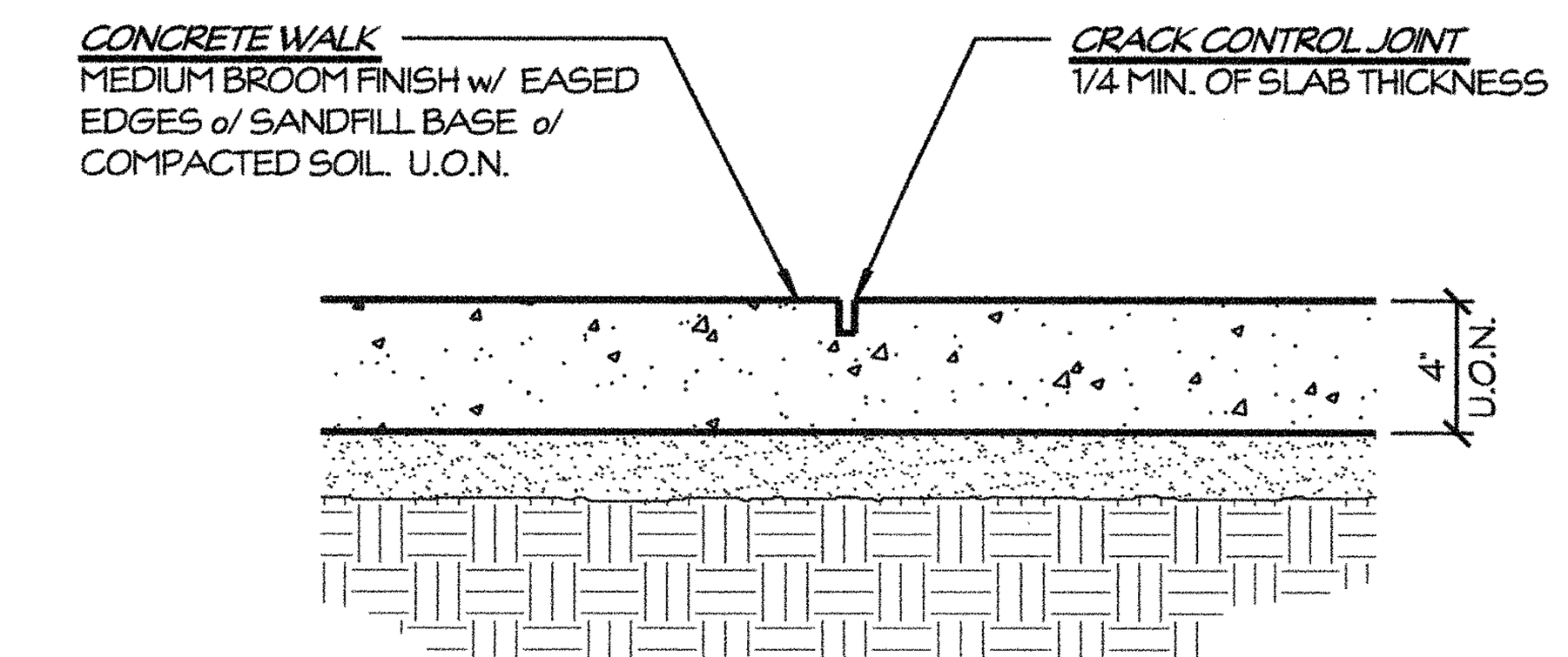

NOTES:
PROVIDE CRACK CONTROL JOINTS AT 10'-0" O.C. MAX. EA. WAY (SEE SITE PLAN FOR LOCATIONS)

SCALE: 1 1/2" = 1'-0"

2 FIBROUS EXPANSION JOINT

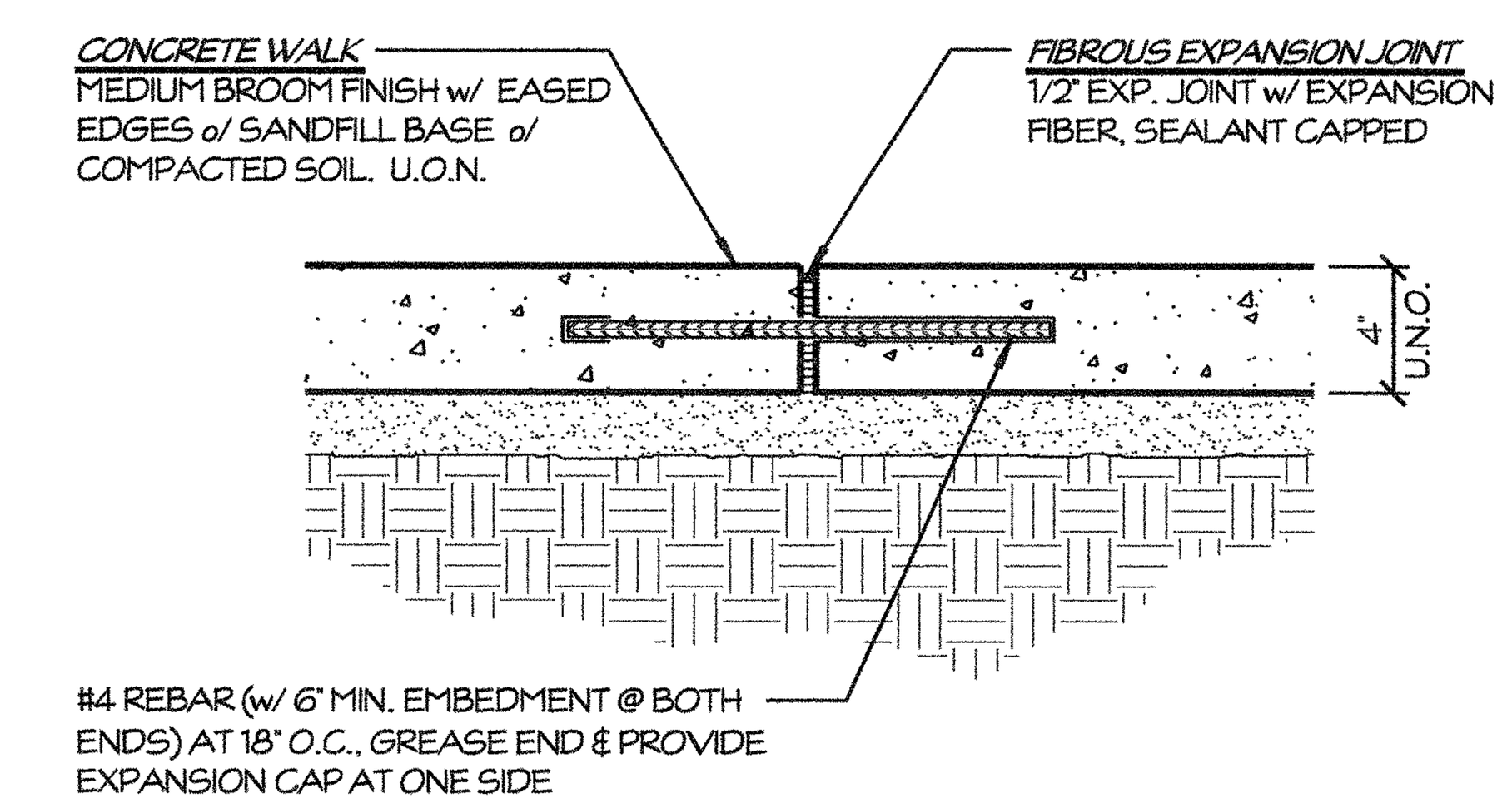

NOTES:
PROVIDE FIBROUS EXPANSION JOINTS AT 25'-0" O.C. MAX. EA. WAY (SEE SITE PLAN FOR LOCATIONS)

SCALE: 1 1/2" = 1'-0"

3 FIBROUS EXPANSION JOINT AT EXISTING CONCRETE WALK

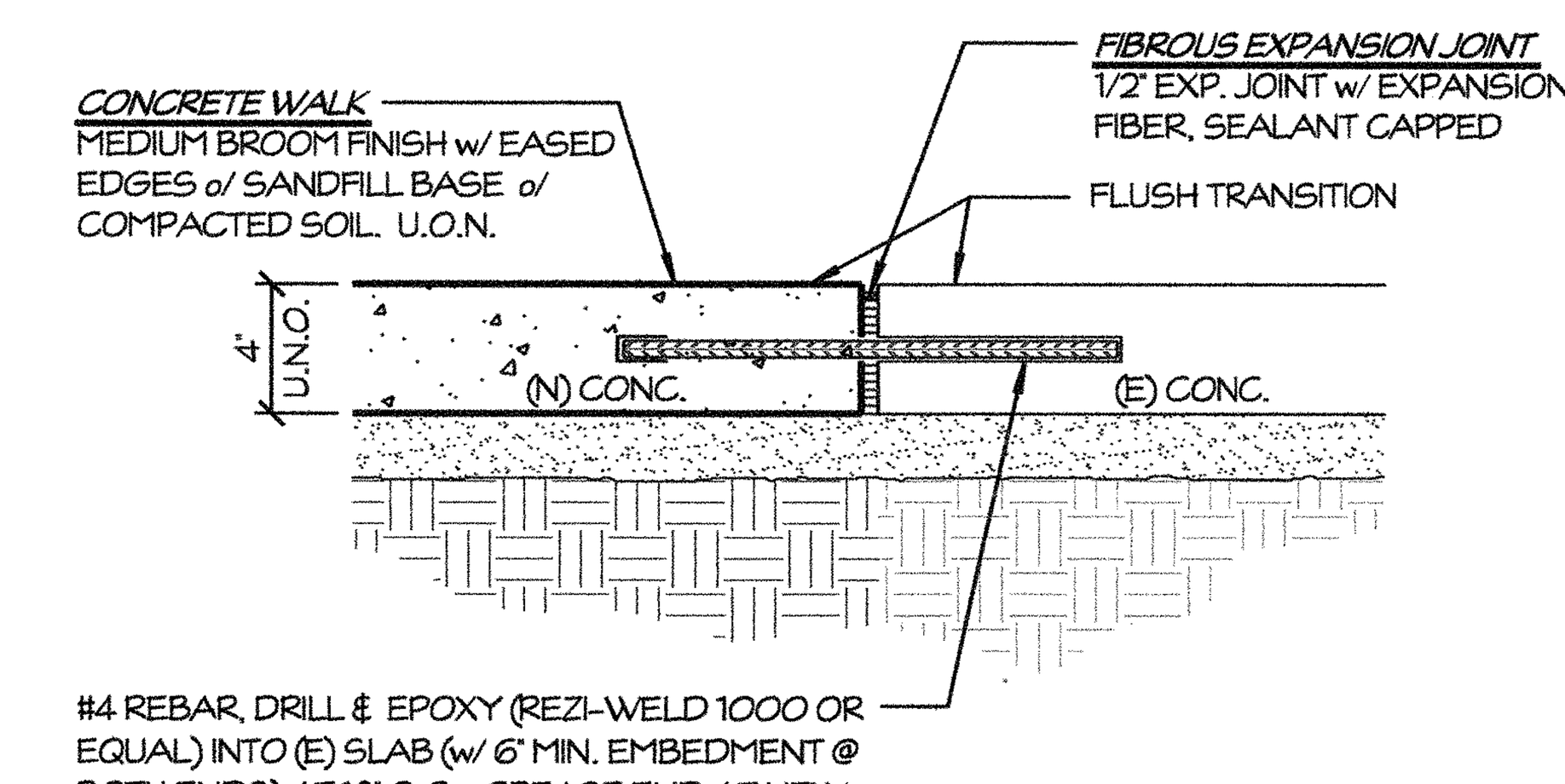

NOTES:
PROVIDE FIBROUS EXPANSION JOINTS AT 25'-0" O.C. MAX. EA. WAY (SEE SITE PLAN FOR LOCATIONS)

SCALE: 1 1/2" = 1'-0"

7 ACCESSIBLE ENTRY SIGNAGE

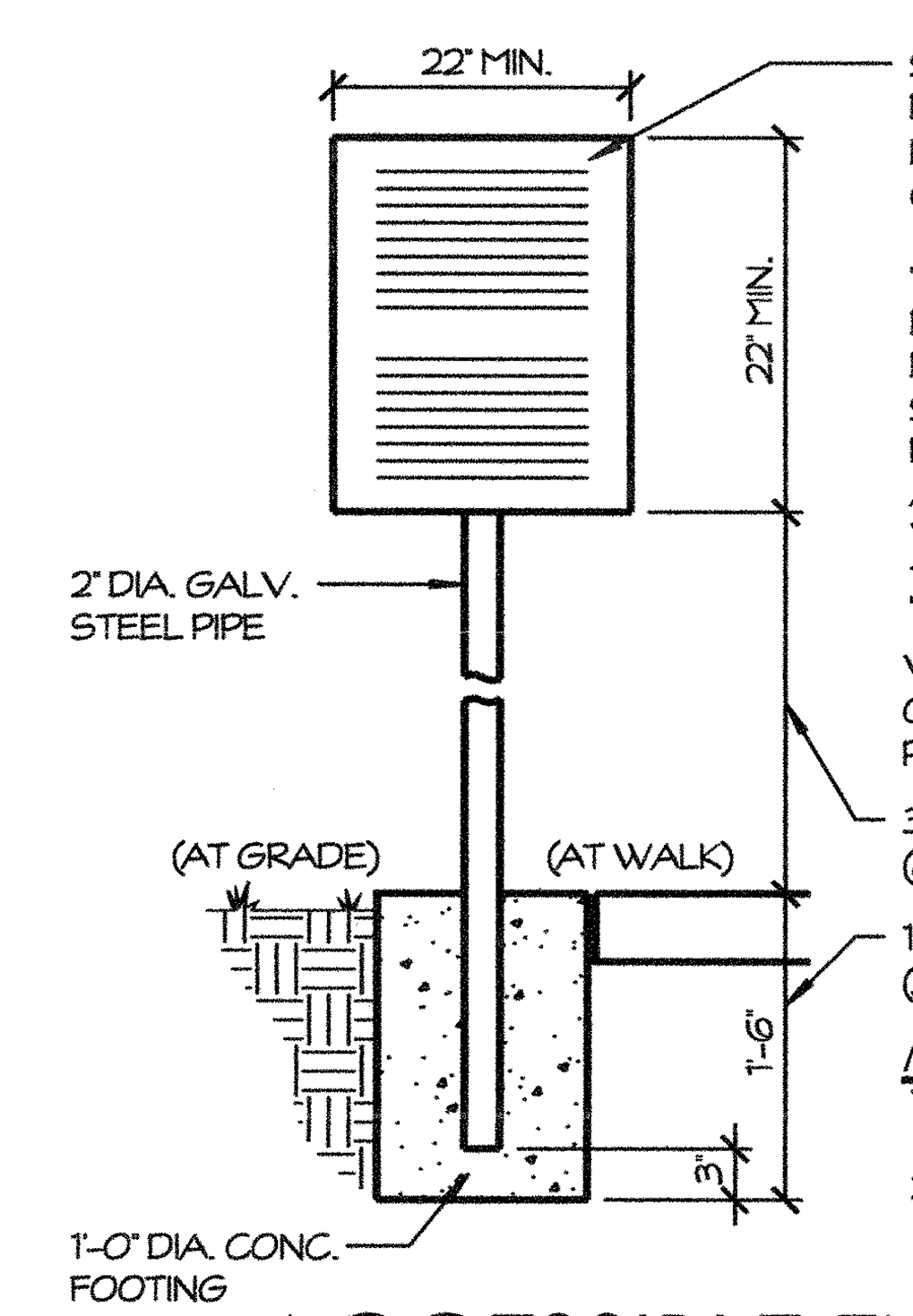

SIGNAGE SHALL NOT BE LESS THAN 17 INCHES BY 22 INCHES IN SIZE WITH LETTERING NOT LESS THAN 1" IN HEIGHT WHICH CLEARLY & CONSPICUOUSLY STATES THE FOLLOWING:

"UNAUTHORIZED VEHICLES PARKED IN DESIGNATED ACCESSIBLE SPACES NOT DISPLAYING DISTINGUISHING PLACARDS OR SPECIAL LICENSE PLATES ISSUED FOR PERSONS WITH DISABILITIES WILL BE TOWED AWAY AT OWNERS EXPENSE. TOWED VEHICLES MAY BE RECLAIMED AT ALLSTAR TOWING OR BY TELEPHONING 559.591.1634"

VERIFY APPROPRIATE INFORMATION w/ OWNER BEFORE INCLUDING AS A PERMANENT PART OF THE SIGN

36" MIN. HEIGHT
(80" MIN. HEIGHT IN PATH OF TRAVEL)

18" MIN. HEIGHT
(30" MIN. HEIGHT IN PATH OF TRAVEL)

NOTES:
1. RECLAMATION SITE AND TELEPHONE NUMBER TO BE DETERMINED BY OWNER
2. SIGN TO BE POSTED IN A CONSPICUOUS PLACE AT EACH ENTRANCE TO THE OFF STREET PARKING FACILITY

SCALE: 3/4" = 1'-0"

SIMPBK
7591 NORTH INGRAM AVENUE #101 · FRESNO, CALIFORNIA 93711
T559.448.8400 · F559.448.8467 · www.sim-pbk.com

LICENSED ARCHITECT · DAVID MICHAEL IWANAGA · C 17199 · 3-31-19 RENEWAL DATE · STATE OF CALIFORNIA

IDENTIFICATION STAMP
DIV. OF THE STATE ARCHITECT
02-117009
AC FLS SS
DATE 7/23/18

FILE: 54-62
PTN: 72009-05

Monson-Sultana School

PROJECT NAME
MONSON-SULTANA ELEMENTARY RELOCATABLE
10643 AVENUE 416, SULTANA, CA 93666

DATE	DESCRIPTION (PROJECT DEVELOPMENT)	No.	DATE	DESCRIPTION (REVISIONS)
.	.	.	.	.
.	.	.	.	.
.	.	.	.	.

SHEET NAME
DETAILS

PROJECT ARCHITECT: DAVID IWANAGA
PROJECT NUMBER: 18-28
DRAWN BY: .
SCALE: AS NOTED
CHECKED BY:
DATE: 07.17.18
SHEET NUMBER: D1

e:\18-28 monson-sultana juesd\work\18-28_d1 details.dwg | D1 DETAILS | 2018.07.21 17:11 | jasond

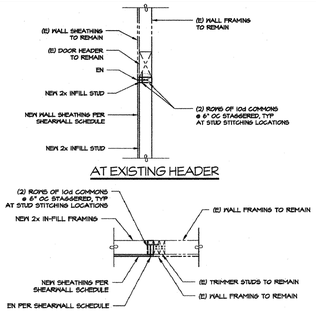

35 INFILL FRAMING

SCALE: 1" = 1'-0"

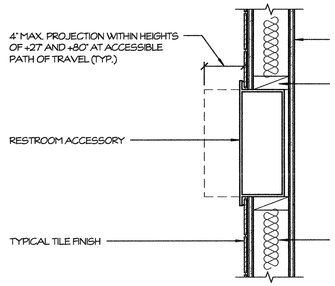

31 WALL FINISH CONDITION AT RESTROOM ACCESSORIES

SCALE: 11/2" = 1'-0"

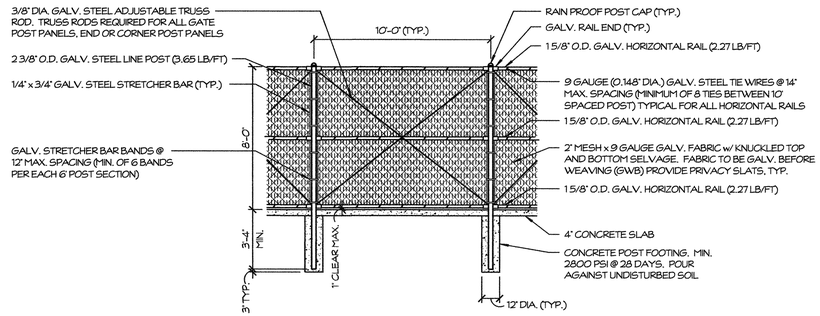

27 TYP. CHAIN LINK FENCE PANEL

SCALE: 1/4" = 1'-0"

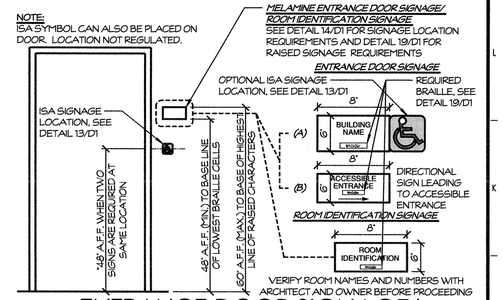

20 ENTRANCE DOOR SIGNAGE/ ROOM IDENTIFICATION SIGNAGE

SCALE: 1/2" = 1'-0"

NOTES
1. EQUIP THE DOOR INTO THE STALL WITH AUTO CLOSING DEVICE AND PROVIDE A CLEAR OPENING WIDTH OF 34" AT END OF STALL.
2. FLUSH VALVE FOR WATER CLOSET SHALL BE LOCATED ON THE SIDE ACCESSIBLE TO THE WHEELCHAIR.
3. COMPARTMENT DOORS SHALL HAVE A SELF-CLOSING DEVICE WITH U-SHAPED HANDLE.
4. THE INSIDE AND OUTSIDE OF THE COMPARTMENT DOOR SHALL BE EQUIPPED WITH A LOOP OR U-SHAPED HANDLE IMMEDIATELY BELOW THE LATCH. THE LATCH SHALL BE FLIP-OVER STYLE, SLIDING, OR OTHER HARDWARE NOT REQUIRING THE USER TO GRASP OR TWIST.

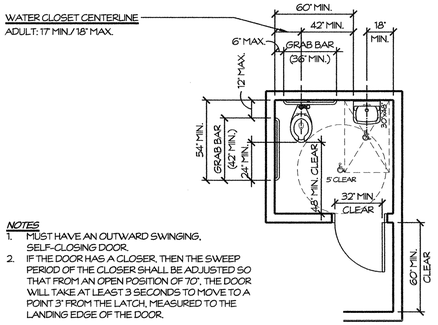

NOTES
1. MUST HAVE AN OUTWARD SWINGING, SELF-CLOSING DOOR.
2. IF THE DOOR HAS A CLOSER, THEN THE SWEEP PERIOD OF THE CLOSER SHALL BE ADJUSTED SO THAT FROM AN OPEN POSITION OF 70°, THE DOOR WILL TAKE AT LEAST 3 SECONDS TO MOVE TO A POINT 3" FROM THE LATCH, MEASURED TO THE LANDING EDGE OF THE DOOR.

SINGLE ACCOMMODATION TOILET
(DIMENSIONS INDICATE MINIMUM/MAXIMUM STANDARDS AND CLEARANCES AND NOT ACTUAL DIMENSIONS)

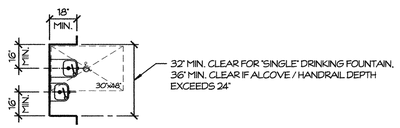

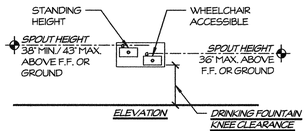

DRINKING FOUNTAINS
OPERABLE PARTS
THE FLOW OF WATER SHALL BE ACTIVATED BY A MANUALLY OPERATED SYSTEM THAT IS FRONT OR SIDE MOUNTED AND LOCATED WITHIN 6 INCHES OF THE FRONT EDGE OF THE FOUNTAIN OR AN AUTOMATIC ELECTRONICALLY CONTROLLED DEVICE.
SPOUT LOCATION
THE SPOUT SHALL BE LOCATED 15 INCHES MINIMUM FROM THE VERTICAL SUPPORT AND 5 INCHES MAXIMUM FROM THE FRONT EDGE OF THE UNIT, INCLUDING BUMBERS.
WATER FLOW
THE SPOUT SHALL PROVIDE A FLOW OF WATER 4 INCHES HIGH MINIMUM AND SHALL BE LOCATED 5 INCHES MINIMUM FROM THE FRONT OF THE UNIT. THE ANGLE OF THE WATER STREAM SHALL BE MEASURED HORIZONTALLY RELATIVE TO THE FRONT FACE OF THE UNIT. WHERE SPOUTS ARE LOCATED LESS THAN 3 INCHES OF THE FRONT OF THE UNIT, THE ANGLE OF THE WATER STREAM SHALL BE 30 DEGREES MAXIMUM. WHERE SPOUTS ARE LOCATED BETWEEN 3 INCHES AND 5 INCHES MAXIMUM FROM THE FRONT OF THE UNIT, THE ANGLE OF THE WATER STREAM SHALL BE 15 DEGREES MAXIMUM.
DEPTH
WALL AND POST MOUNTED CANTILEVERED DRINKING FOUNTAINS SHALL BE 18 INCHES MINIMUM AND 19 INCHES MAXIMUM IN DEPTH.

ACCESSIBLE DRINKING FOUNTAIN

38 TYPICAL ACCESSIBILE PLUMBING FIXTURE STANDARDS

SCALE: 1/4" = 1'-0"

WATER CLOSET
1. ALL WATER CLOSETS FOR PUBLIC USE SHALL HAVE ELONGATED BOWLS WITH OPEN FRONT SEATS.

DISPENSERS
THE OUTLET OF THE DISPENSER SHALL BE BELOW THE GRAB BAR, 19 INCHES MIN. ABOVE F.F. AND SHALL NOT BE LOCATED BEHIND GRAB BARS. DISPENSERS SHALL NOT BE OF A TYPE THAT CONTROLS DELIVERY OR THAT DOES NOT ALLOW CONTINUOUS PAPER FLOW. FLUSH CONTROLS
FLUSH CONTROLS SHALL BE HAND OPERATED OR AUTOMATIC. HAND OPERATED FLUSH CONTROLS SHALL BE LOCATED 44 INCHES MAXIMUM ABOVE F.F. FLUSH CONTROLS SHALL BE LOCATED ON THE OPEN SIDE OF THE WATER CLOSET EXCEPT IN AMBULATORY ACCESSIBLE COMPARTMENTS.

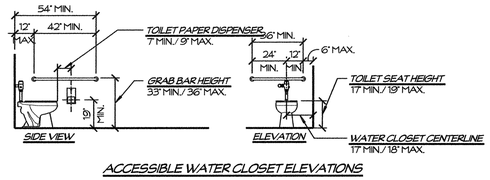

ACCESSIBLE WATER CLOSET ELEVATIONS

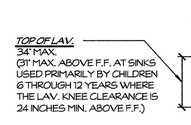

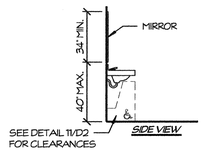

NOTES
1. INSULATE HOT WATER & DRAIN PIPES UNDER ACCESSIBLE LAVATORIES.
2. THERE SHALL BE NO SHARP OR ABRASIVE OBJECTS OR SURFACES UNDER LAVATORIES.
3. FAUCET CONTROLS AND OPERATING MECHANISMS ARE REQUIRED TO BE OPERABLE WITH ONE HAND AND CANNOT REQUIRE GRASPING, PINCHING, OR TWISTING OF WRIST. THE FORCE REQUIRED TO ACTIVATE CONTROLS IS NOT TO EXCEED 5 LBS. LEVER-OPERATED, PUSH-TYPE AND ELECTRONICALLY CONTROLLED MECHANISMS ARE EXAMPLES OF ACCEPTABLE DESIGN.
4. SELF-CLOSING VALVES ARE ALLOWED IF THE FAUCET REMAINS OPEN FOR AT LEAST 10 SECONDS.

ACCESSIBLE LAVATORY

TOILET ROOM ACCESSORIES
1. WHERE TOWEL, SANITARY NAPKIN AND WASTE RECEPTACLES AND SIMILAR DISPENSING AND DISPOSAL FIXTURES ARE PROVIDED AT LEAST ONE OF EACH TYPE IS TO BE LOCATED WITH ALL OPERABLE PARTS, INCLUDING COIN SLOTS, WITHIN 40" FROM THE FLOOR.

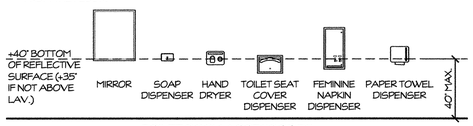

TOILET ROOM ACCESSORIES
(MAX. 4" PROJECTION, TYP. - SEE DETAIL 11/D3)

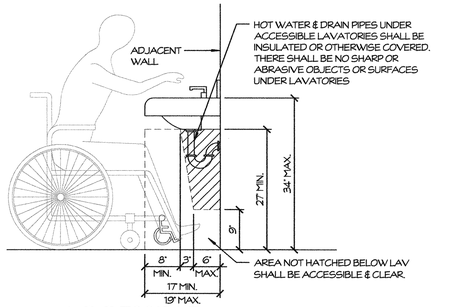

28 ACCESSIBLE LAVATORY CLEARANCES

SCALE: 3/4" = 1'-0"

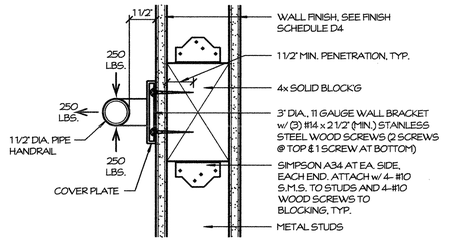

NOTES:
GRAB BAR SHALL BE ABLE TO WITHSTAND A MIN. 250 LB. POINT LOAD

29 GRAB BAR ANCHORAGE

SCALE: 3" = 1'-0"

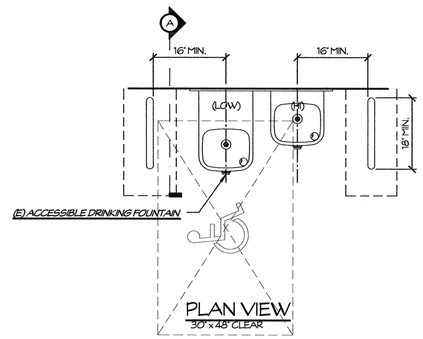

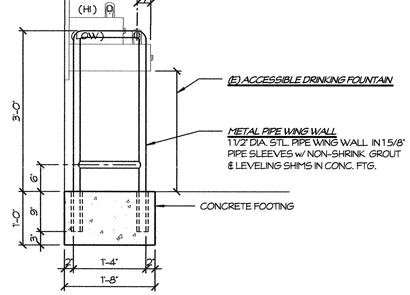

A SECTION

25 DRINKING FOUNTAIN w/ PIPE GUARDRAILS

SCALE: 3/4" = 1'-0"

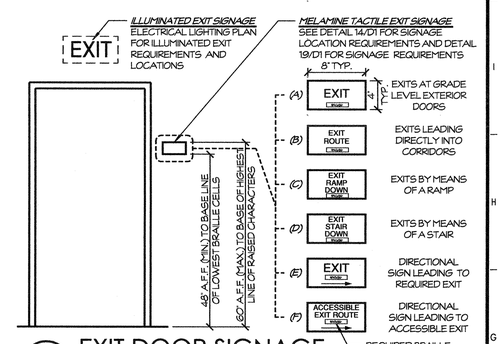

21 EXIT DOOR SIGNAGE

SCALE: 1/2" = 1'-0"

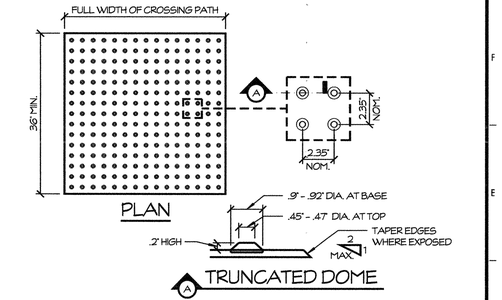

22 "IN-LINE" PATTERN DETECTABLE WARNING

SCALE: 3/4" = 1'-0"

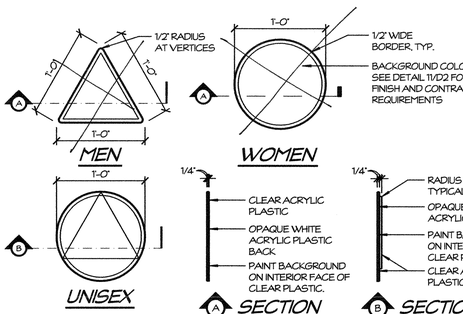

NOTE:
ATTACH EACH SIGN USING (3) FLATHEAD WOOD SCREWS, COUNTERSINK IN ADHESIVE.

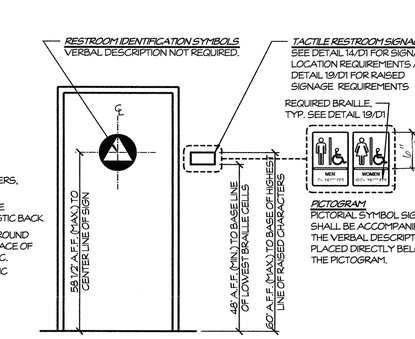

30 TACTILE RESTROOM DOOR SIGNAGE AND IDENTIFICATION SYMBOLS

SCALE: 1/2" = 1'-0"

SIMPBK
7580 NORTH INGRAM AVENUE #101 · FRESNO, CALIFORNIA 93711
T559.448.8400 · F559.448.8437 · www.sim-pbk.com
LICENSED ARCHITECT DAVID MICHAEL IWANAGA C 17199 3-31-19 RENEWAL DATE STATE OF CALIFORNIA

IDENTIFICATION STAMP
DIV. OF THE STATE ARCHITECT
02-117009
AC PLS SS DSA
DATE 7/23/18

FILE: 15442
PTN: 72009-05

Monson-Sultana School

PROJECT NAME
MONSON-SULTANA ELEMENTARY RELOCATABLE
10643 AVENUE 416, SULTANA, CA 93666

DATE	DESCRIPTION	PROJECT DEVELOPMENT	No.	DATE	DESCRIPTION	REVISIONS

SHEET NAME
DETAILS

PROJECT ARCHITECT	PROJECT NUMBER	SHEET NUMBER
DAVID IWANAGA	18-28	D2
DRAWN BY	SCALE	
	AS NOTED	
CHECKED BY	DATE	
	07.17.18	

e:\18-28 monson-sultana j:\archwork\18-28_d2 details.dwg | D2 DETAILS | 2018.07.21 11:26 | jsecrist

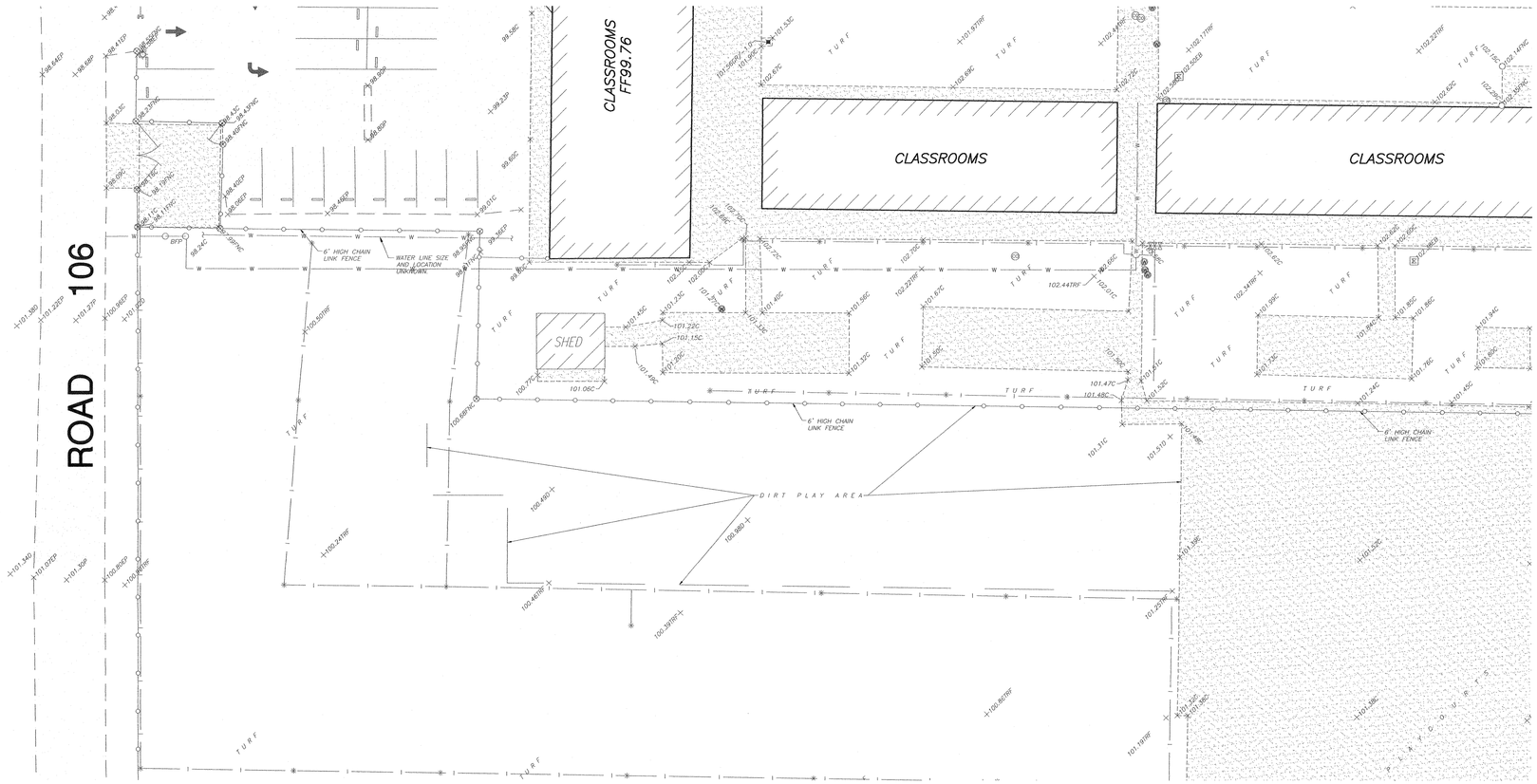

TOPOGRAPHIC LEGEND:

	AREA LIGHT		
BFP	BACKFLOW PREVENTER	C	CONCRETE
	SEWER CLEANOUT	D	DIRT
	SEWER MANHOLE	EP	EDGE OF PAVEMENT
	WATER VALVE	FF	FINISH FLOOR
	WHEELSTOP	FNC	FENCE – CHAIN LINK
	FENCE – CHAIN LINK	GR	GRATE INLET
	EDGE OF URF	P	PAVEMENT
	STRIPING	TRF	TURF/GRASS
	CONCRETE		
	EDGE OF PAVEMENT		
	EXISTING BUILDING		
	EXISTING ASPHALT CONCRETE		
	EXISTING CONCRETE		

NOTES:

1. THE TOPOGRAPHIC SURVEY WAS PERFORMED ON JUNE 19, 2018.
2. THE TOPOGRAPHIC SURVEY IS ONLY A PARTIAL SURVEY OF THE SPECIFIC PHYSICAL FEATURES OF THE SITE AND THEIR ELEVATIONS. NOT ALL AREAS OF WORK WERE INCLUDED IN THE TOPOGRAPHIC SURVEY.
3. THE SURFACE FEATURES OF THE UTILITIES SHOWN WERE OBTAINED AT THE TIME OF THE TOPOGRAPHIC SURVEY AND FROM A UTILITY SEARCH OF PLANS PROVIDED BY THE OWNER. IT IS POSSIBLE THAT ADDITIONAL UTILITIES MAY BE PRESENT THAT WERE NOT REVEALED THROUGH THE UTILITY SEARCH. NO GUARANTEE CAN BE MADE ON THE ACCURACY OR COMPLETENESS OF THE UTILITIES SHOWN.
4. THE EXISTENCE AND LOCATION OF ALL IMPROVEMENTS, UTILITIES, STRUCTURES, BUILDINGS, PARTY WALLS, PARKING STALLS, EASEMENTS, SERVITUDES AND ENCROACHMENTS ARE BASED SOLELY ON ABOVE GROUND, VISIBLE EVIDENCE.

SITE BENCHMARK:

CHISELED SQUARE ON CONCRETE WEST SIDE OF NORTH DRIVE OF THE WEST PARKING LOT. ASSUMED ELEVATION OF 99.98'

0 20' 40'

SCALE: 1" = 20'

Alan Mok, PE, PLS,
LEED AP
Principal

7415 N. PALM AVENUE #101
FRESNO, CALIFORNIA 93711
Tel. 559-432-6879
Fax. 559-432-6897
www.alanmokengineering.com

REGISTERED PROFESSIONAL ENGINEER
ALAN K. MOK
No. 42618
EXP. 3/30/20
CIVIL
STATE OF CALIFORNIA

Alan Mok Engineering

SIMPBK
7591 NORTH INGRAM AVENUE #101 · FRESNO, CALIFORNIA 93711
T559.448.8400 · F559.448.8467 · www.sim-pbk.com

LICENSED ARCHITECT
DAVID MICHAEL IWANAGA
C 17199
3-31-19
RENEWAL DATE
STATE OF CALIFORNIA

IDENTIFICATION STAMP
DIV. OF THE STATE ARCHITECT
02-117009
AC FLS SS
DATE 7/23/18

FILE: 54-62
PTN: 72009-05

E:\18-28 Monson-Sultana JUSD\MS-Logo-BLK.jpg

PROJECT NAME
MONSON-SULTANA ELEMENTARY RELOCATABLE
10643 AVENUE 416, SULTANA, CA 93666

DATE	DESCRIPTION	PROJECT DEVELOPMENT	No.	DATE	DESCRIPTION	REVISIONS

SHEET NAME
TOPOGRAPHIC SURVEY

PROJECT ARCHITECT	PROJECT NUMBER	SHEET NUMBER
DAVID IWANAGA	18–28	C1
DRAWN BY	SCALE	
CHECKED BY	DATE	
	07.17.18	

P:\2018 PROJECTS\218-0184\DRAWINGS\PRODUCTION DRAWINGS\218-0184_TP.DWG
PLOT: 7/13/2018 7:44 AM BY ED WONG

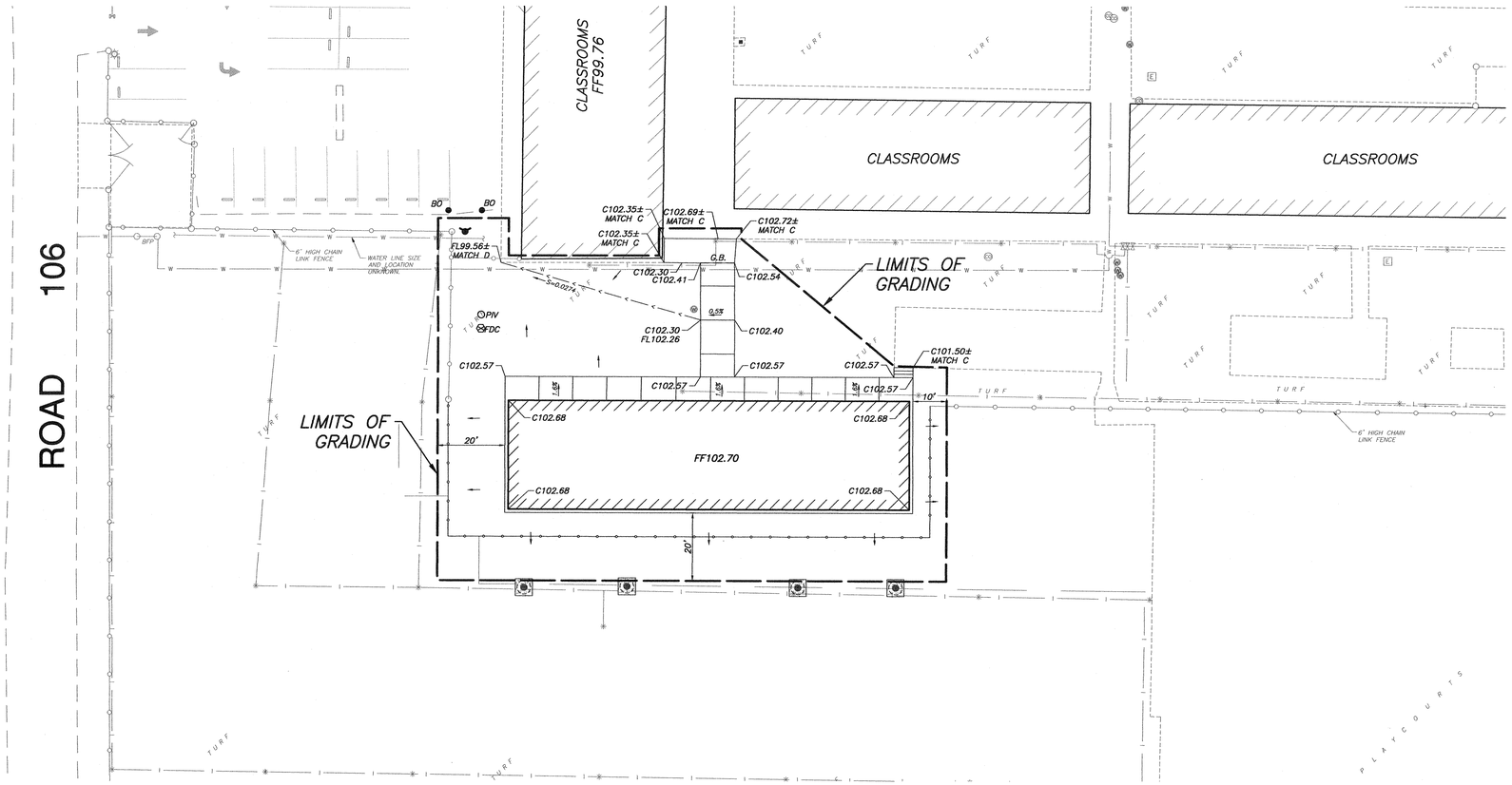

GRADING AND DRAINAGE LEGEND:

C	CONCRETE
FF	FINISH FLOOR
FL	FLOWLINE OF DIRT SWALE
G.B.	GRADE BREAK
C101.47	NEW FINISHED GRADE
	NEW FINISHED SURFACE DRAINAGE DIRECTION
1.5%	NEW FINISHED SURFACE SLOPE AND DIRECTION OF DRAINAGE
S=0.0050	NEW FLOWLINE SLOPE AND DIRECTION OF FLOW
G.B.	NEW GRADE BREAK
	NEW DIRT SWALE
	NEW LIMITS OF GRADING

GRADING NOTES:

1. THE "LIMITS OF GRADING" SHOWN ARE SCHEMATIC. THE CONTRACTOR SHALL CUT, FILL, BACKFILL, COMPACT, GRADE AND REGRADE AS NECESSARY TO PERFORM ALL NEW IMPROVEMENTS SHOWN ON THESE PLANS. AREAS BEYOND THE "LIMITS OF GRADING" DISTURBED BY THE ACTIVITIES OF THE CONTRACTOR AS PART OF THIS PROJECT SHALL BE REGRADED TO THE SATISFACTION OF THE OWNER.
2. THE CONTRACTOR SHALL ADJUST ALL NEW AND EXISTING UTILITY BOXES, VAULTS AND MANHOLE COVERS AND FRAME TO MATCH ADJACENT FINISHED SURFACE GRADE WITHIN THE "LIMITS OF GRADING". SEE DETAIL L/C11 IF APPLICABLE.
3. THE LOCATION AND ALIGNMENT OF THE STORM DRAIN SYSTEM IS SCHEMATIC. ADJUSTMENTS ARE TO BE MADE IN THE FIELD DUE TO EXISTING UTILITIES AND NEW IMPROVEMENTS.

0 20' 40'
SCALE: 1" = 20'

Alan Mok, PE, PLS,
LEED AP
Principal
7415 N. PALM AVENUE #101
FRESNO, CALIFORNIA 93711
Tel. 559-432-6879
Fax. 559-432-6897
www.alanmokengineering.com

REGISTERED PROFESSIONAL ENGINEER
ALAN K. MOK
No. 42618
EXP. 3/31/20
CIVIL
STATE OF CALIFORNIA

Alan Mok Engineering

SIMPBK
7591 NORTH INGRAM AVENUE #101 · FRESNO, CALIFORNIA 93711
T559.448.8400 · F559.448.8467 · www.sim-pbk.com

LICENSED ARCHITECT
DAVID MICHAEL IWANAGA
C 17199
3-31-19
RENEWAL DATE
STATE OF CALIFORNIA

IDENTIFICATION STAMP
DIV. OF THE STATE ARCHITECT
02-117909
AD
DATE 7/23/18
FILE: 54-62
PTN: 72009-05

PROJECT NAME
MONSON-SULTANA ELEMENTARY RELOCATABLE
10643 AVENUE 416, SULTANA, CA 93666

DATE	DESCRIPTION	PROJECT DEVELOPMENT	No.	DATE	DESCRIPTION	REVISIONS

SHEET NAME
GRADING AND DRAINAGE PLAN

PROJECT ARCHITECT	PROJECT NUMBER	SHEET NUMBER
DAVID IWANAGA	18–28	C2
DRAWN BY	SCALE	
CHECKED BY	DATE	
	07.17.18	

P:\2018 PROJECTS\218-0184\DRAWINGS\PRODUCTION DRAWINGS\218-0184_GR.DWG
PLOT: 7/13/2018 7:45 AM BY ED WONG

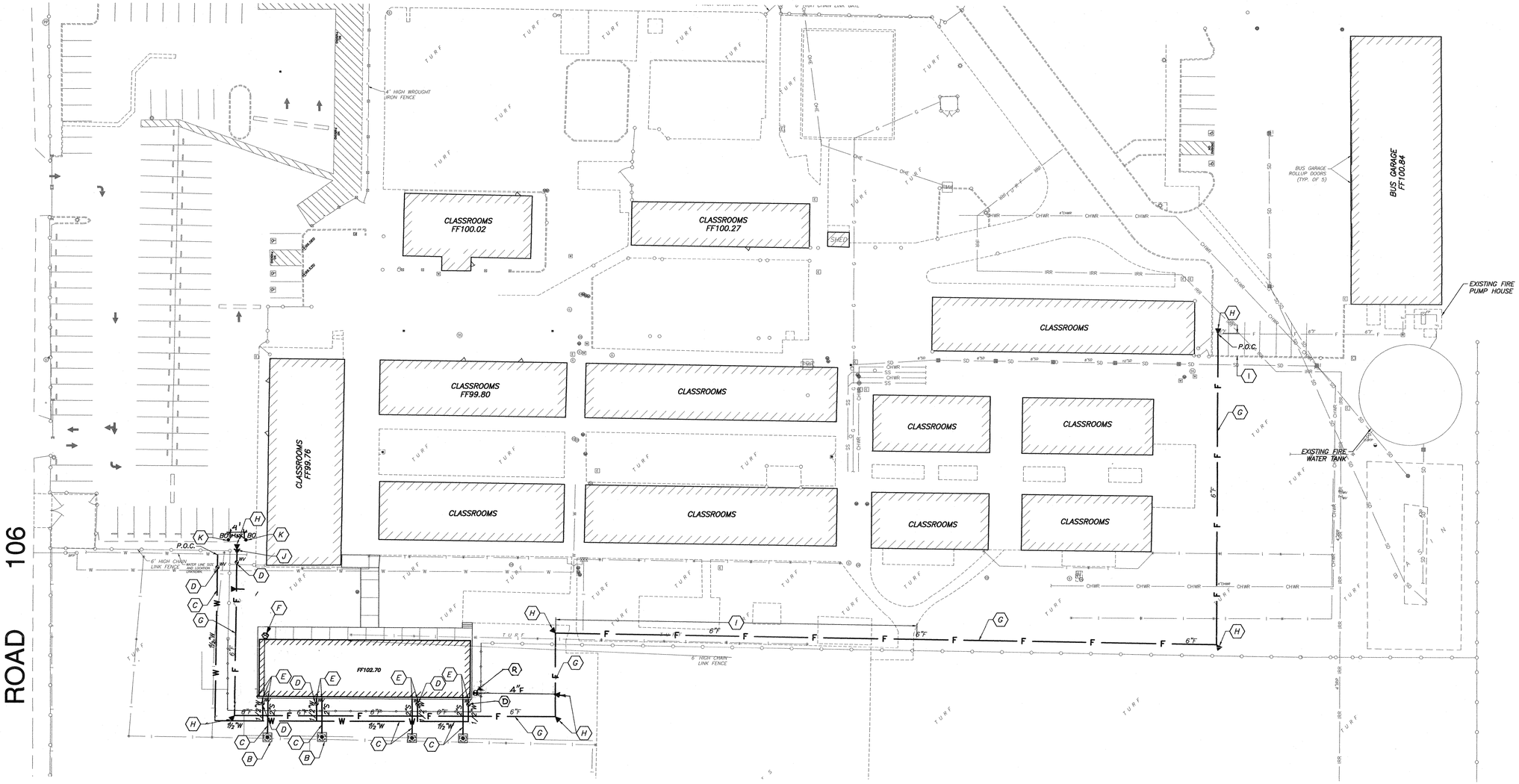

PARTIAL UTILITY LEGEND

(A)	NOT USED.
(B)	CONSTRUCT DRAIN WELL PER DETAIL B/C4.
(C)	FURNISH AND INSTALL PVC, SCH. 40 SEWER OR WATER PIPELINE. BACKFILL TRENCH PER DETAIL A/C4.
(D)	FURNISH AND INSTALL GATE VALVE PER DETAIL E/C4.
(E)	MAKE CONNECTION TO STUBOUT FROM BUILDING. FURNISH AND INSTALL ALL NECESSARY FITTINGS. SEE NOTE 2.
(F)	FURNISH AND INSTALL PIV AND FDC
(G)	FURNISH AND INSTALL PVC, C900 DR-14 WATER PIPELINE. BACKFILL TRENCH PER DETAIL A/C4. SIZE AS NOTED.
(H)	CONSTRUCT CONCRETE THRUST BLOCK PER DETAIL E/C4.
(I)	SAWCUT AND REMOVE ASPHALT CONCRETE PAVEMENT STRUCTURAL SECTION, CONCRETE CURB, GUTTER, SIDEWALK AND MOWSTRIP AS NECESSARY TO INSTALL NEW PIPELINE AND DETECTOR CHECK. TRENCH BACKFILL AND PATCH PAVING PER DETAIL A/C4.
(J)	FURNISH AND INSTALL FIRE HYDRANT PER DETAIL F/C4.
(K)	FURNISH AND INSTALL BOLLARDS PER DETAIL G/C4.
(R)	FIRE RISER PER FIRE SPRINKLERS PLAN

FOR DETAIL REFER TO FIRE SPRINKLERS PLAN

	NEW FIRE HYDRANT.
BO	NEW BOLLARD.
P.O.C.	NEW POINT OF CONNECTION.
PIV	NEW POST INDICATOR VALVE.
FDC	NEW FIRE DEPARTMENT CONNECTION.
	NEW SEWER SURFACE CLEANOUT.
	NEW THRUST BLOCK.
	NEW WATER VALVE.
	NEW DRAIN WELL.
F 4"F	NEW FIRE PIPE LINE. SIZE AS NOTED.
SS 2"SS	NEW SEWER PIPE LINE. SIZE AS NOTED.
S=0.016 W 1½"W	NEW WATER LINE. SIZE AS NOTED.
SD 6"SD	NEW STORM DRAIN PIPE LINE. SEE GRADING AND DRAINAGE PLAN.

UTILITY NOTES:

1. AS A FIRST ORDER OF WORK, THE CONTRACTOR SHALL POTHOLE AND LOCATE THE EXISTING UTILITY LINE FOR THE POINT OF CONNECTION. PROVIDE TO THE ENGINEER INFORMATION ON DEPTH, SIZE, PIPE MATERIAL AND LOCATION. ALLOW THE ENGINEER SUFFICIENT TIME TO REVIEW UTILITY INFORMATION FOR A POSSIBLE REVISION TO THE HORIZONTAL AND VERTICAL ALIGNMENT OF THE NEW UTILITY. THE CONTRACTOR IS NOT TO PROCEED WITH THE INSTALLATION OF THE NEW UTILITIES UNTIL APPROVED BY THE ENGINEER.
2. THE CONTRACTOR SHALL COORDINATE WITH THE BUILDING PLUMBING PLAN FOR NEW UTILITY STUBOUT LOCATIONS.
3. THE LOCATION OF NEW UTILITIES ARE SCHEMATICALLY SHOWN. THE CONTRACTOR SHALL INSTALL THE UTILITIES BASED ON NEW AND EXISTING CONDITIONS IN THE FIELD.
4. IN EXISTING ASPHALT CONCRETE AND CONCRETE IMPROVEMENTS, THE CONTRACTOR SHALL SAWCUT AND REMOVE AS NECESSARY TO INSTALL NEW UTILITIES. REPLACE REMOVED IMPROVEMENTS WITH LIKE KIND AND MATCH THICKNESS.

0 30' 60'

SCALE: 1" = 30'

Alan Mok, PE, PLS, LEED AP
Principal
7415 N. PALM AVENUE #101
FRESNO, CALIFORNIA 93711
Tel. 559-432-6879
Fax. 559-432-6897
www.alanmokengineering.com

REGISTERED PROFESSIONAL ENGINEER — ALAN K. MOK — No. 42618 — EXP. 9-30-19 — CIVIL — STATE OF CALIFORNIA

Alan Mok Engineering

SIMPBK
7591 NORTH INGRAM AVENUE #101 · FRESNO, CALIFORNIA 93711
T.559.448.8400 · F.559.448.8467 · www.sim-pbk.com

LICENSED ARCHITECT — DAVID MICHAEL IWANAGA — C 17199 — 3-31-19 RENEWAL DATE — STATE OF CALIFORNIA

IDENTIFICATION STAMP
DIV. OF THE STATE ARCHITECT
02-117009
AC ___ DSA ___ SS ___
DATE 7/23/18

FE: 54.62
PIN: 7.20009-05

E:\18-28 Monson-Sultana JUESD\MS-Logo-B&W.jpg

PROJECT NAME
MONSON-SULTANA ELEMENTARY RELOCATABLE
10643 AVENUE 416, SULTANA, CA 93666

REVISIONS				
DATE	DESCRIPTION	PROJECT DEVELOPMENT	No. DATE	DESCRIPTION
.	.		. .	
.	.		. .	
.	.		. .	

SHEET NAME
SEWER AND WATER PLAN

PROJECT ARCHITECT	PROJECT NUMBER	SHEET NUMBER	
DAVID IWANAGA	18–28	C3	
DRAWN BY	SCALE		
CHECKED BY	DATE		
	07.17.18		

P:\2018 PROJECTS\218-0184\DRAWINGS\PRODUCTION DRAWINGS\218-0184_UT.DWG
PLOT: 7/13/2018 7:49 AM BY ED WONG

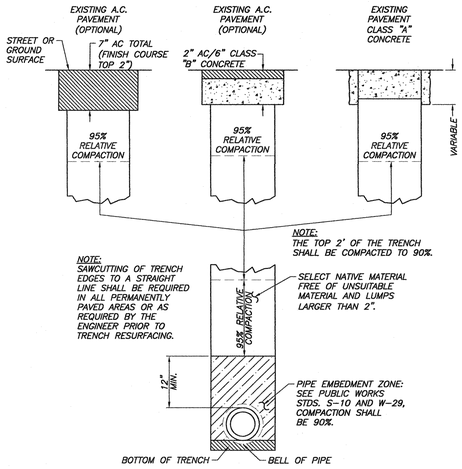

A TRENCH BACKFILL AND SURFACE REPLACEMENT
NOT TO SCALE

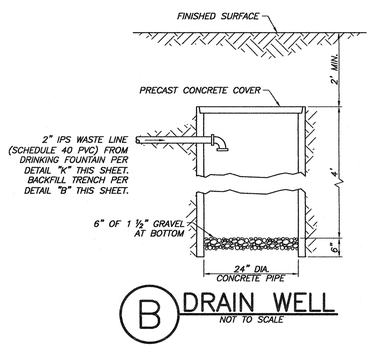

B DRAIN WELL
NOT TO SCALE

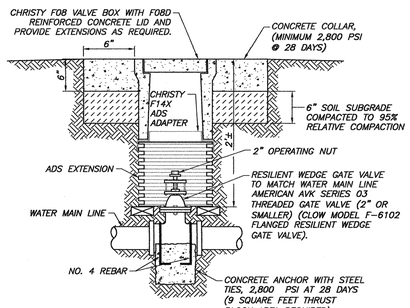

C GATE VALVE AND LID
NOT TO SCALE

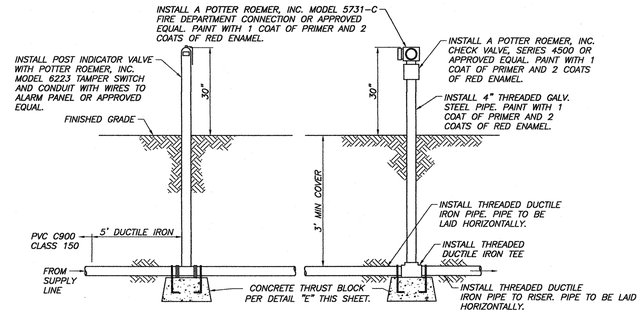

D POST INDICATOR VALVE AND FIRE DEPARTMENT CONNECTION
NOT TO SCALE

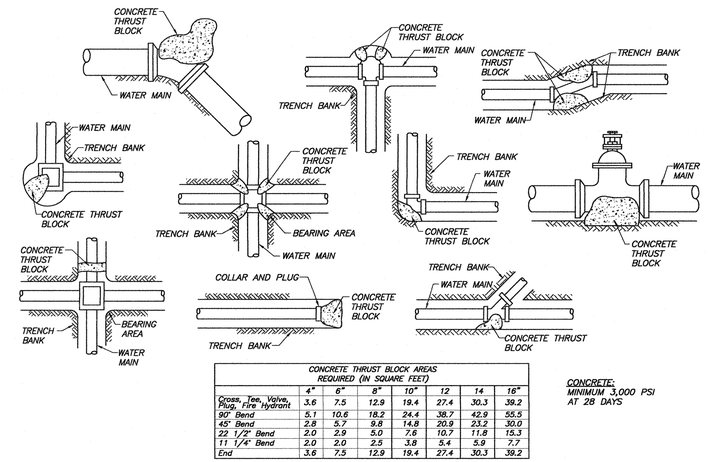

CONCRETE THRUST BLOCK AREAS REQUIRED (IN SQUARE FEET)							
	4"	6"	8"	10"	12	14	16"
Cross, Tee, Valve, Plug, Fire Hydrant	3.6	7.5	12.9	19.4	27.4	30.3	39.2
90° Bend	5.1	10.6	18.2	24.4	38.7	42.9	56.5
45° Bend	2.8	5.7	9.8	14.8	20.9	23.2	30.0
22 1/2° Bend	2.0	2.9	5.0	7.6	10.7	11.8	15.3
11 1/4° Bend	2.0	2.0	2.5	3.8	5.4	5.9	7.7
End	3.6	7.5	12.9	19.4	27.4	30.3	39.2

BASED ON 1500 PSF SOIL BEARING CAPACITY

CONCRETE: MINIMUM 3,000 PSI AT 28 DAYS

E CONCRETE THRUST BLOCKS
NOT TO SCALE

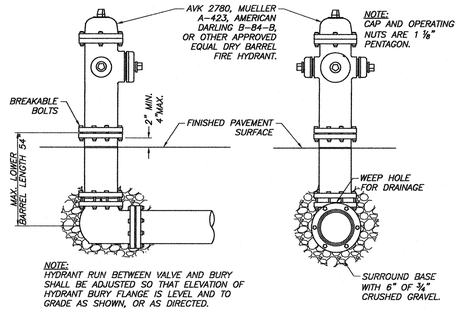

F FIRE HYDRANT
NOT TO SCALE

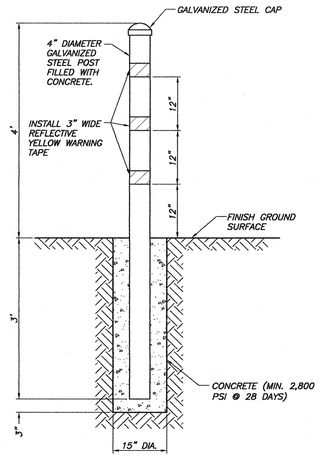

G STEEL BOLLARD
NOT TO SCALE

Alan Mok, PE, PLS, LEED AP
Principal
7415 N. PALM AVENUE #101
FRESNO, CALIFORNIA 93711
Tel. 559-432-6879
Fax. 559-432-6897
www.alanmokengineering.com

Alan Mok Engineering

SIMPBK
7591 NORTH INGRAM AVENUE #101 · FRESNO, CALIFORNIA 93711
T559.448.8400 · F559.448.8457 · www.sim-pbk.com

LICENSED ARCHITECT · DAVID MICHAEL IWANAGA · C 17199 · 3-31-19 RENEWAL DATE · STATE OF CALIFORNIA

IDENTIFICATION STAMP DIV. OF THE STATE ARCHITECT 02-117009 AC RS SS DT DATE 7/23/18

E:\16-28 Monson-Sultana JUESD\IWD-Logo-B&W.jpg

FILE: 5462
PIN: 7209.05

REGISTERED PROFESSIONAL ENGINEER · ALAN K. MOK · No. 42615 · EXP. 3/31/20 · CIVIL · STATE OF CALIFORNIA

PROJECT NAME
MONSON-SULTANA ELEMENTARY RELOCATABLE
10643 AVENUE 416, SULTANA, CA 93666

REVISIONS					
DATE	DESCRIPTION	PROJECT DEVELOPMENT	No.	DATE	DESCRIPTION
.	.		.	.	.
.	.		.	.	.
.	.		.	.	.

SHEET NAME
DETAILS

PROJECT ARCHITECT	PROJECT NUMBER	SHEET NUMBER
DAVID IWANAGA	18-28	C4
DRAWN BY	SCALE	
CHECKED BY	DATE	
	07.17.18	

P:\2018_PROJECTS\218-0184\DRAWINGS\PRODUCTION DRAWINGS\218-0184_DT.DWG
PLOT: 7/13/2018 7:46 AM BY ED WONG

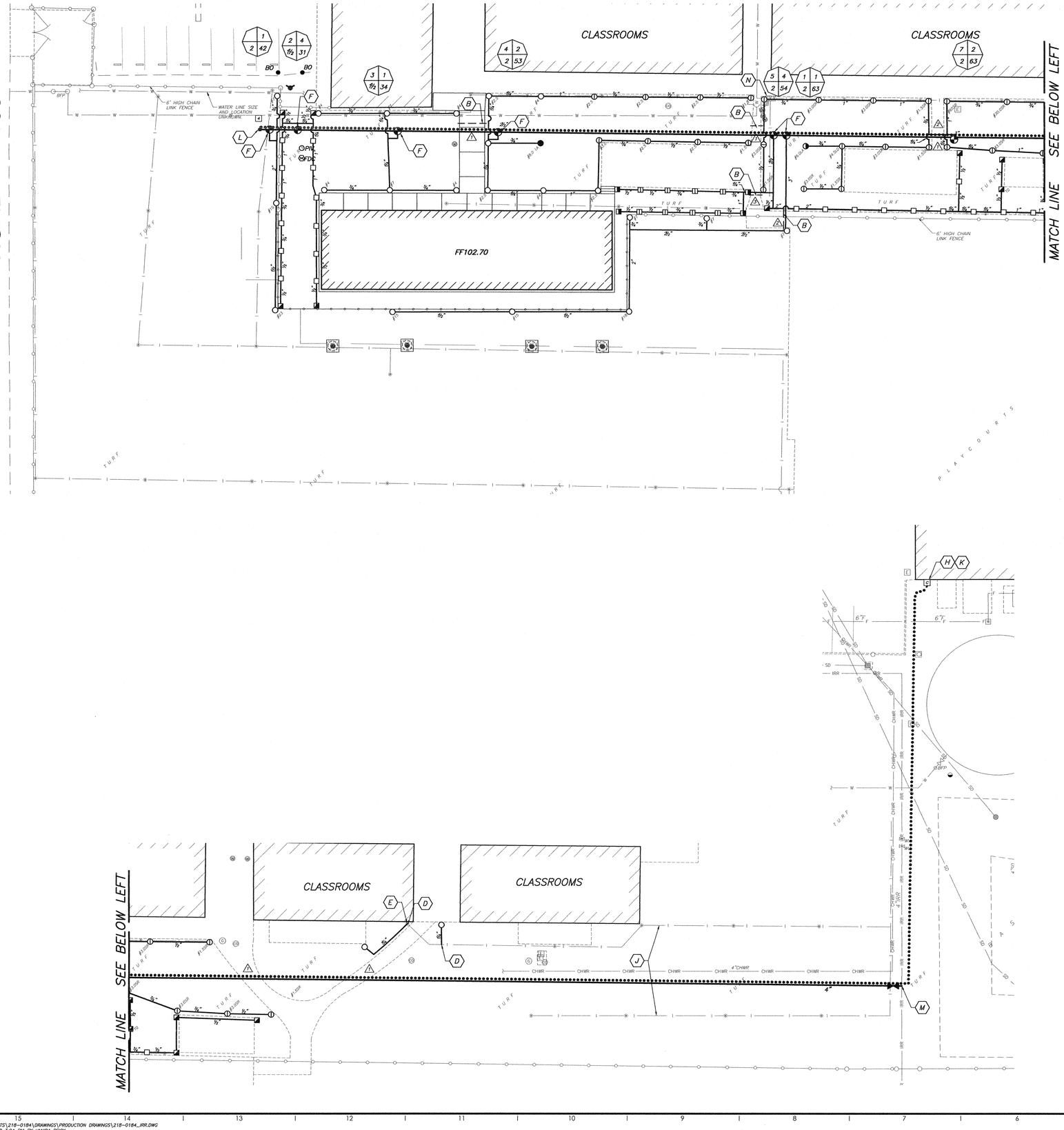

IRRIGATION LEGEND:

- HUNTER I25-06-SS-15 6" POP-UP ROTOR WITH SWING JOINT ASSEMBLY (14.3 GPM @ 60 PSI) OR APPROVED EQUIVALENT.
- HUNTER I25-06-SS-07 6" POP-UP ROTOR WITH SWING JOINT ASSEMBLY (7.5 GPM @ 60 PSI) OR NOZZLE SIZE AS NOTED OR APPROVED EQUIVALENT
- HUNTER I20-06-SS-4.0, 6" POP-UP ROTOR WITH SWING JOINT ASSEMBLY (4.7 GPM @ 60 PSI) OR WITH NOZZLE SIZE AS NOTED OR APPROVED EQUIVALENT.
- HUNTER PROS-06-PRS30-15H, 6" POP-UP SPRAY WITH 15H, HALF CIRCLE NOZZLE, WITH SWING JOINT ASSEMBLY (2.16 GPM @ 40 PSI) OR APPROVED EQUIVALENT.
- HUNTER PROS-06-PRS30-15Q, 6" POP-UP SPRAY WITH 15Q, QUARTER CIRCLE NOZZLE, WITH SWING JOINT ASSEMBLY (1.14 GPM @ 40 PSI) OR WITH NOZZLE AS NOTED OR APPROVED EQUIVALENT.
- HUNTER PROS-06-PRS30-12H, 6" POP-UP SPRAY WITH 12H, HALF CIRCLE NOZZLE, WITH SWING JOINT ASSEMBLY (1.52 GPM @ 40 PSI) OR APPROVED EQUIVALENT.
- HUNTER PROS-06-PRS30-RCS OR LCS, 6" POP-UP SPRAY WITH RIGHT OR LEFT CORNER STRIP NOZZLE WITH SWING JOINT ASSEMBLY (0.75 GPM @ 40 PSI) OR APPROVED EQUIVALENT.
- IRRITROL 100-S REMOTE CONTROL VALVE WITH CHRISTY B16 VALVE BOX (SIZE AS NOTED) OR APPROVED EQUIVALENT. USE DUCTILE IRON SADDLE WITH STAINLESS STEEL STRAPS FOR MAIN LINE CONNECTION.
- RESILIENT WEDGE GATE VALVE WITH CHRISTY G5 VALVE BOX AND 2" OPERATING NUT.
- 4" IRRIGATION MAIN LINE, 4" IPS SIZE CLASS 200 PVC PIPE WITH RUBBER GASKETED BELL AND ONLY DUCTILE IRON FITTINGS ALLOWED FOR PIPE CONNECTIONS.
- 3" IRRIGATION LATERAL LINE, SCH 40PVC PIPE. SIZE AS NOTED.
- PATH OF IRRIGATION CONTROL WIRES
- ABANDON EXISTING IRRIGATION LATERAL LINE, SALVAGE EXISTING SPRINKLERS. CAP LINE AS REQUIRED.
- (1) IRRIGATION SLEEVES: 1-8"ø SDR 35 PVC AND 2-2"ø SCH 40 PVC
- (2) IRRIGATION SLEEVES: 1-3"ø SCH 40
- [C] HUNTER PHC-2400, 24 STATION OUTDOOR CONTROLLER OR APPROVED EQUIVALENT.
- [4] SUPPLY FOUR SPARE WIRES WITH SPARE COMMON.
- (A) ABANDON AND REMOVE EXISTING LATERAL LINE AND SALVAGE EXISTING SPRINKLERS.
- (B) BORE IRRIGATION SLEEVE OR SAWCUT, REMOVE AND REPLACE EXISTING CONCRETE WALK WITH ½" DIAMETER STEEL DOWELS WITH 4" EMBEDMENT, TWOR FOR EACH SIDE.
- (C) CAP EXISTING IRRIGATION LINE
- (D) MAKE CONNECTION TO EXISTING LATERAL LINE
- (E) REMOVE AND SALVAGE EXISTING SPRINKLER. CAP LINE AS REQUIRED.
- (F) MAKE CONNECTION TO EXISTING IRRIGATION MAIN LINE WITH DUCTILE IRON SADDLE WITH STAINLESS STEEL STRAPS.
- (G) MOUNT CONTROLLER ON CMU WALL WITH WIRE CONDUIT. CONTRACTOR TO SECURE GFI PROTECTED 120 VOLT POWER WITH SHUT OFF FOR CONTROLLER FROM EXISTING RESTROOM BUILDING.
- (H) INSTALL CHRISTY B-9 VALVE BOX FOR CONTROLLER CONDUIT TERMINATION. ALL CONDUIT TO BE METAL RIGID WITH METAL JUNCTION. SECURE CONDUIT TO WALL, CORE WALL AS NEEDED.
- (I) PROTECT EXISTING MAIN LINE AND WIRES
- (J) PROTECT EXISTING SPRINKLER AND LATERAL LINE
- (K) MAKE CONNECTION TO EXISTING HUNTER I-CORE CONTROLLER. FURNISH AND INSTALL 8 STATION MODULE.
- (L) FURNISH AND INSTALL AIR RELEASE VALVE PER INSTALLATION DETAIL.
- (M) MAKE CONNECTION TO EXISTING IRRIGATION MAIN LINE WITH DUCTILE IRON FITTING AND STAINLESS STEEL COMPRESSION COUPLING.
- (N) REMOVE AND SALVAGE THREE EXISTING IRRIGATION VALVES WITH AVB AND PLUG CONNECTION TO DOMESTIC MAIN.

0 20' 40'

SCALE: 1" = 20'

REGISTERED PROFESSIONAL ENGINEER ALAN K. MOK No. 42618 EXP. 3/30/20 CIVIL STATE OF CALIFORNIA

Alan Mok, PE, PLS, LEED AP
Principal
7415 N. PALM AVENUE #101
FRESNO, CALIFORNIA 93711
Tel. 559-432-6879
Fax. 559-432-6897
www.alanmokengineering.com

Alan Mok Engineering

SIMPBK
7591 NORTH INGRAM AVENUE #101 · FRESNO, CALIFORNIA 93711
T559.448.8400 · F559.448.8492 · www.sim-pbk.com

LICENSED ARCHITECT DAVID MICHAEL IWANAGA C 17199 3-31-19 RENEWAL DATE STATE OF CALIFORNIA

IDENTIFICATION STAMP
DIV. OF THE STATE ARCHITECT
02-117009
AC ES SS
DATE 7/23/18
FILE: 52-69
PIN: 7200-05

E:\18-28 Monson-Sultana JUESD\MEP-Logo-BW.jpg

PROJECT NAME
MONSON-SULTANA ELEMENTARY RELOCATABLE
10643 AVENUE 416, SULTANA, CA 93666

REVISIONS					
DATE	DESCRIPTION	PROJECT DEVELOPMENT	No.	DATE	DESCRIPTION
.	.	.	.	.	.
.	.	.	.	.	.
.	.	.	.	.	.

SHEET NAME
IRRIGATION PLAN

PROJECT ARCHITECT	PROJECT NUMBER	SHEET NUMBER	
DAVID IWANAGA	18-28	C5	
DRAWN BY	SCALE		
CHECKED BY	DATE		
	07.17.18		

P:\2018 PROJECTS\218-0184\DRAWINGS\PRODUCTION DRAWINGS\218-0184_IRR.DWG
PLOT: 7/13/2018 3:04 PM BY VANIDA BEGY

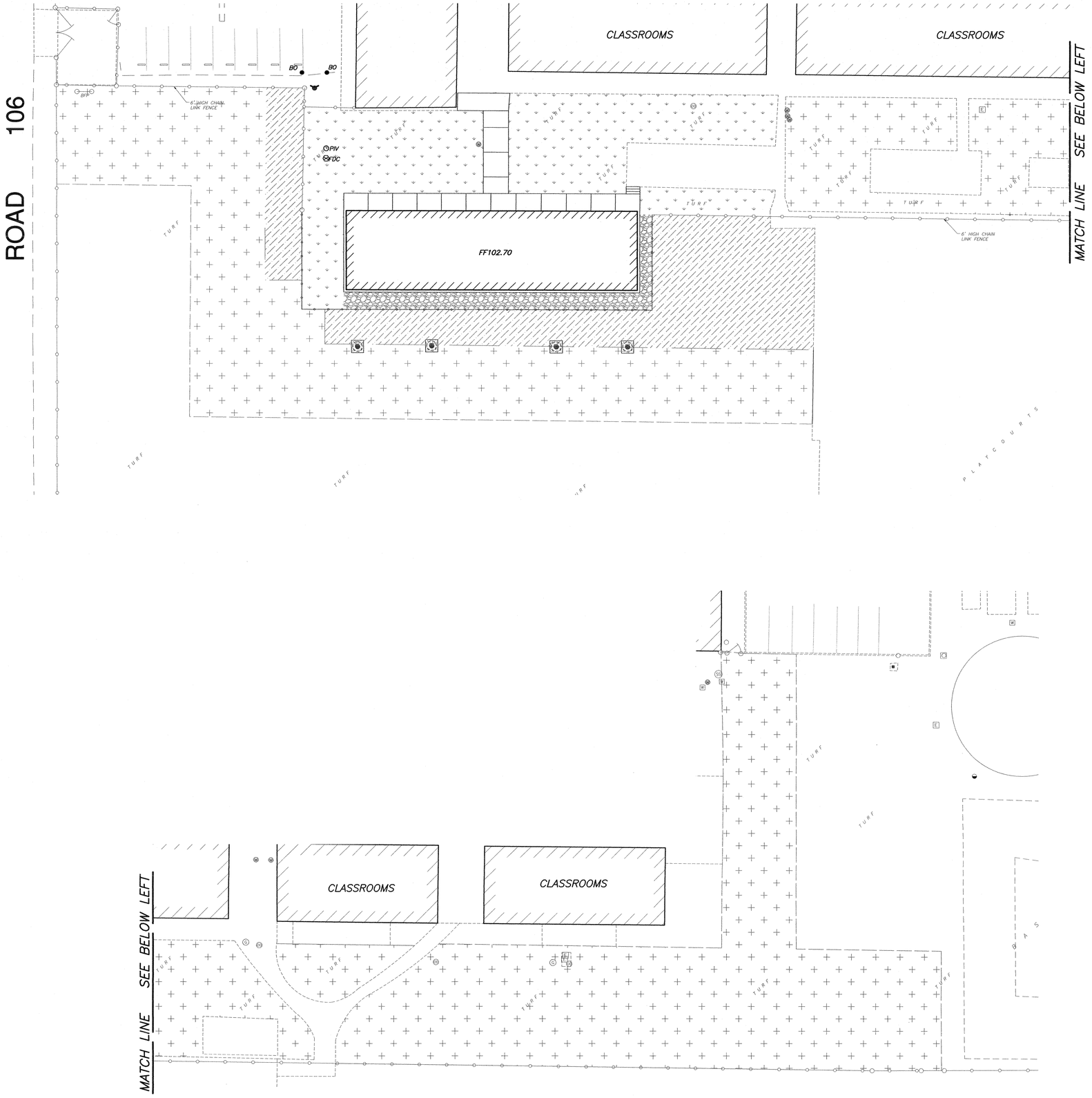

LANDSCAPE LEGEND:

BOTANNICAL NAME	COMMON NAME	QTY.	SIZE
AG SOD FARM "CELEBRATION" BERMUDAGRASS SOD		3,400±	S.F.
PLANT AND ESTABLISH TURF	(PANAM @ 4 LBS/1000 S.F.)	6,800±	S.F.
RESTORE EXISTING TURF		25,000±	S.F.
3" THICK ROCKDUST SURFACING		1,300±	S.F.

PLANTING NOTES:

1. QUANTITIES ARE DESIGN ENGINEER'S ESTIMATE ONLY. CONTRACTOR SHALL BE RESPONSIBLE FOR THE INSTALLATION OF ALL MATERIAL APPEARING ON PLAN.
2. DO NOT WILLFULLY PROCEED WITH CONSTRUCTION AS DESIGNED WHEN IT IS OBVIOUS THAT UNKNOWN OBSTRUCTIONS AND/OR GRADE DIFFERENCES EXIST THAT MAY NOT HAVE BEEN KNOWN DURING DESIGN. SUCH CONDITION SHALL BE IMMEDIATELY BROUGHT TO THE ATTENTION OF THE DESIGN ENGINEER. THE CONTRACTOR SHALL ASSUME FULL RESPONSIBILITY FOR ALL NECESSARY REVISIONS DUE TO FAILURE TO GIVE SUCH NOTIFICATION.
3. CONTRACTOR SHALL BE RESPONSIBLE FOR ANY COORDINATION WITH SUBCONTRACTORS AS REQUIRED TO ACCOMPLISH PLANTING OPERATIONS.
4. SEE SPECIFICATIONS FOR PLANTING REQUIREMENTS, MATERIALS AND EXECUTION.
5. ALL PLANT MATERIAL SHALL BE APPROVED BY THE OWNER'S AUTHORIZED REPRESENTATIVE PRIOR TO INSTALLATION.
6. FINAL LOCATION OF ALL PLANT MATERIALS SHALL BE SUBJECT TO THE APPROVAL OF THE OWNER'S AUTHORIZED REPRESENTATIVE.
7. CONTRACTOR SHALL NOTIFY THE OWNER'S AUTHORIZED REPRESENTATIVE 48 HOURS PRIOR TO COMMENCEMENT OF WORK TO COORDINATE PROJECT OBSERVATION SCHEDULES.
8. SEE DETAILS AND SPECIFICATIONS FOR STAKING METHOD. PLANT PIT DIMENSION AND BACKFILL REQUIREMENTS.
9. IF CONFLICTS ARISE BETWEEN SIZE OF AREAS AND PLANS, CONTRACTOR SHALL CONTACT PROJECT ARCHITECT FOR RESOLUTION. FAILURE TO MAKE SUCH CONFLICTS KNOWN TO THE DESIGN ENGINEER, WILL RESULT IN CONTRACTOR'S LIABILITY TO RELOCATE THE MATERIALS.
10. NO PLANTING SHALL BE DONE UNTIL INSTALLATION OF THE IRRIGATION SYSTEM IS COMPLETED, FINAL GRADES HAVE BEEN ESTABLISHED, PLANTING AREAS HAVE BEEN PROPERLY GRADED, SOIL PREPARED, WATER TEST PERFORMED IN PRESENCE OF DISTRICT REPRESENTATIVE AND THE WORK APPROVED BY THE DESIGN ENGINEER.
11. RECONDITION EXISTING TURF WHERE CALLED FOR AND WHERE DAMAGE FROM CONSTRUCTION OCCURS. RECONDITIONING SHALL INCLUDE BUT NOT NECESSARILY BE LIMITED TO SCALPING, RIPPING OF COMPACTED SOIL, SOIL PREPARATION, FINE GRADING, TURF INSTALLATION AND TURF ESTABLISHMENT.
12. WHERE NEW CONSTRUCTION OCCURS ADJACENT TO EXISTING PLANT MATERIAL, CARE SHALL BE TAKEN TO PROTECT SUCH PLANTING.
13. PLANT PANAM BERMUDA GRASS FROM MAY TO SEPTEMBER ONLY. PLANT TURF STAR REGENERATING PERENNIAL RYE GRASS (RTR) AT RATE OF 7 LBS PER 1,000 SQ.FT., FOR MONTHS BETWEEN SEPTEMBER TO MAY.

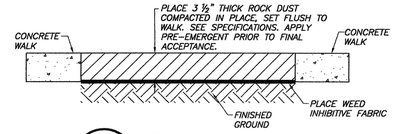

A ROCK DUST
NOT TO SCALE



SCALE: 1" = 20'

REGISTERED PROFESSIONAL ENGINEER ALAN K. MOK No. 42618 EXP. 3/30/20 CIVIL STATE OF CALIFORNIA

Alan Mok, PE, PLS, LEED AP
Principal
7415 N. PALM AVENUE #101
FRESNO, CALIFORNIA 93711
Tel 559-432-6879
Fax. 559-432-6897
www.alanmokengineering.com

Alan Mok Engineering

SIMPBK
7591 NORTH INGRAM AVENUE #101 · FRESNO, CALIFORNIA 93711
T559.448.8400 · F559.448.8487 · www.sim-pbk.com

LICENSED ARCHITECT DAVID MICHAEL IWANAGA C 17199 3-31-19 RENEWAL DATE STATE OF CALIFORNIA

IDENTIFICATION STAMP
DIV. OF THE STATE ARCHITECT
02-117009
AC FLS SS OT
DATE 7/23/18

FILE: 5442
PIN: 7209-05

P:\18-28 Monson-Sultana JUESD\MD-Logo-B&W.jpg

PROJECT NAME
MONSON-SULTANA ELEMENTARY RELOCATABLE
10643 AVENUE 416, SULTANA, CA 93666

DATE	DESCRIPTION	PROJECT DEVELOPMENT	No.	DATE	DESCRIPTION	REVISIONS

SHEET NAME
LANDSCAPE PLAN

PROJECT ARCHITECT	PROJECT NUMBER	SHEET NUMBER
DAVID IWANAGA	18-28	C6
DRAWN BY	SCALE	
CHECKED BY	DATE	
	07.17.18	

P:\2018 PROJECTS\218-0184\DRAWINGS\PRODUCTION DRAWINGS\218-0184_LS.DWG
PLOT: 7/13/2018 2:56 PM BY VANDA BEGY

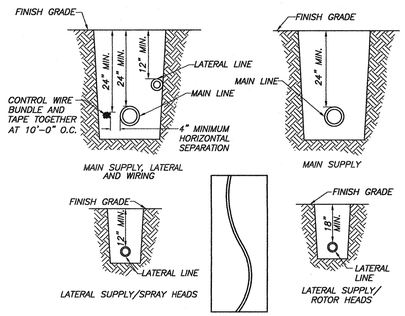

A TRENCHING
NOT TO SCALE

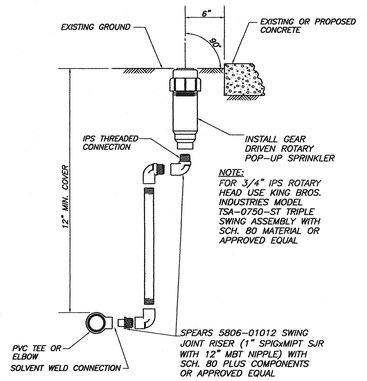

B ROTARY SPRINKLER INSTALLATION
NOT TO SCALE

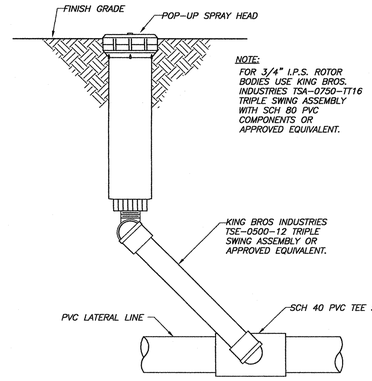

C 6" & 12" SPRAY POP-UP
NOT TO SCALE

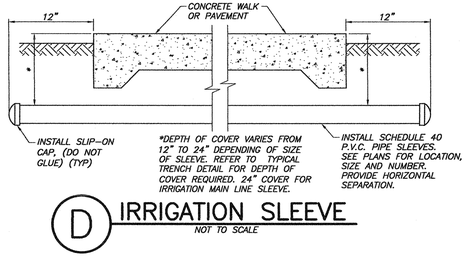

D IRRIGATION SLEEVE
NOT TO SCALE

IRRIGATION NOTES:

1. LATERAL LINES SHALL BE SCH. 40 PVC
2. ADJUST ALL IRRIGATION HEADS TO ELIMINATE OVERSPRAY ON ADJACENT HARD SURFACE AREAS.
3. PIPING, VALVES, ETC. SHOWN WITHIN PAVED AREAS FOR DESIGN CLARIFICATION ONLY AND SHALL BE INSTALLED IN PLANTING AREAS WHERE POSSIBLE.
4. DO NOT WILLFULLY INSTALL THE IRRIGATION SYSTEM AS SHOWN ON THE DRAWINGS WHEN IT IS OBVIOUS IN THE FIELD THAT OBSTRUCTIONS, GRADE DIFFERENCES OR DIFFERENCES IN THE AREA DIMENSIONS EXISTS THAT MIGHT NOT HAVE BEEN CONSIDERED IN THE ENGINEERING. SUCH OBSTRUCTIONS OR DIFFERENCES SHOULD BE BROUGHT TO THE ATTENTION OF THE ENGINEER. IN THE EVENT THIS NOTIFICATION IS NOT PERFORMED, THE CONTRACTOR SHALL ASSUME FULL RESPONSIBILITY FOR ANY REVISIONS NECESSARY AT NO EXPENSE TO THE OWNER.
5. INSTALL VALVE BOXES 12" FROM AND PERPENDICULAR TO WALKS, CURB, LAWN, BUILDINGS OR LANDSCAPE FEATURES. AT MULTIPLE VALVE BOX GROUPS, EACH BOX SHALL BE AN EQUAL DISTANCE FROM THE WALK, CURB, LAWN ,ETC. AND EACH BOX SHALL BE MIN. OF 1' APART. SHORT SIDE OF THE VALVE BOX SHALL BE PARALLEL TO WALK, CURB, LAWN, ETC. INSTALL ONE VALVE PER BOX ONLY.
6. CONTRACTOR SHALL BE RESPONSIBLE FOR THE INSTALLATION OF ALL MATERIAL APPEARING ON PLAN.
7. CONCRETE THRUST BLOCKS SHALL BE PROVIDED ON ALL MAINLINE PIPING. THEY ARE TO BE LOCATED AT ALL ABRUPT CHANGES IN PIPELINE GRADE, CHANGES TO HORIZONTAL ALIGNMENT, REDUCTION IN PIPE SIZES, END OF LINE AND IN-LINE VALVES TO ABSORB ANY AXIAL THRUST OF THE PIPE. THE PIPE MANUFACTURE'S RECOMMENDATIONS FOR THRUST BLOCKS MUST BE FORMED AGAINST UNDISTURBED EARTH.
8. ALL MAIN LINE PIPES SHALL BE PRESSURE TESTED PER STANDARD IRRIGATION SPECIFICATIONS WITH THE VALVES INSTALLED. THE CONTRACTOR SHALL PROVIDE ALL EQUIPMENT NEEDED. IF ANY LEAKS DEVELOP, THE REPAIRS ARE TO BE MADE AND TEST REPEATED UNTIL THE SYSTEM IS PROVEN WATERTIGHT. THE CONTRACTOR IS TO CENTER LOAD THE PIPE AND LEAVE ALL JOINTS EXPOSED FOR INSPECTION. THE PRESSURE TEST SHALL BE OBSERVED AND APPROVED BY THE INSPECTOR. WHEN THE PIPE IS PROVEN WATERTIGHT AND ONLY THEN MAY THE LINE BE BACKFILLED.
9. THE CONTRACTOR SHALL PROVIDE AND KEEP AN UP-TO-DATE "RECORD DRAWING" SHOWING ALL CHANGES TO THE ORIGINAL DRAWINGS AND EXACT LOCATIONS OF FACILITIES INSTALLED. BEFORE FINAL INSPECTION, THE CONTRACTOR SHALL FURNISH "RECORD DRAWINGS" TO THE PROJECT INSPECTOR AND DIGITAL PDF COPY.
10. THE CONTRACTOR SHALL PROVIDE TWO CONTROLLER CHARTS. THE CHART SHALL SHOW THE AREA IRRIGATED BY THE CONTROLLER AND SHALL BE THE MAXIMUM SIZE THE CONTROLLER DOOR WILL ALLOW. THE CHART MAY BE REDUCED DRAWING OF THE RECORD DRAWINGS. THE CHART SHALL BE COLORED WITH A DIFFERENT COLOR FOR EACH STATION. THE CHART SHALL BE LAMINATED OR COVERED IN A WATERTIGHT ENVELOPE.
11. THE CONTRACTOR SHALL BE SOLELY RESPONSIBLE FOR PROVIDING A COMPLETE FUNCTIONING IRRIGATION SYSTEM AS DIRECTED BY THE OWNER. CONTRACTOR SHALL FURNISH INCIDENTAL ITEMS, MATERIALS, LABOR, EQUIPMENT NECESSARY TO PROVIDE A COMPLETELY FUNCTIONAL IRRIGATION SYSTEM WHETHER SOLELY SHOWN OR CALLED FOR ON PLANS AND SPECIFICATIONS. IT SHALL BE THE CONTRACTOR'S RESPONSIBILITY TO INCLUDE SUCH ITEMS IN THEIR PRICE FOR THE WORK. NO ADDITIONAL COMPENSATION WILL BE AUTHORIZED FOR WORK DEEMED INCLUDED IN THE CONTRACT BY OWNER.
12. THE CONTRACTOR SHALL BE SOLELY RESPONSIBLE FOR: CONTROL WIRE TERMINATION AT CONTROLLER, SCHEDULING WATER TIMES AND PROGRAMS FOR THE IRRIGATION CONTROLLERS ON SITE, PROVIDING THE CORRECT AMOUNT OF WATER AFFORDED TO THE PLANT MATERIAL ON THE PROJECT FOR OPTIMUM GROWTH. CONTRACTOR SHALL PROGRAM ALL CONTROLLERS TO UTILIZE THE TOTAL DESIGN FLOW OF THE IRRIGATION SYSTEM. PROGRAMMING SHALL ATTEMPT TO BALANCE THE FLOW AS REQUIRED. THIS REQUIREMENT SHALL RUN FROM START OF CONTRACT UNTIL FINAL ACCEPTANCE OF IRRIGATION SYSTEM. NO ADDITIONAL COMPENSATION SHALL BE AUTHORIZED FOR WORK NEEDED TO PROGRAM, SCHEDULE OR TO SET UP WATERING CYCLES DEEMED INCLUDED IN THE CONTRACT BY THE OWNER.
13. WHEN IRRIGATION SYSTEM IS COMPLETED, THE CONTRACTOR IN THE PRESENCE OF THE DISTRICT REPRESENTATIVE SHALL PERFORM A COVERAGE TEST. THE CONTRACTOR SHALL FURNISH ALL MATERIALS AND LABOR REQUIRED TO CORRECT ANY INADEQUACIES OF COVERAGE DISCLOSED WITHOUT ANY EXTRA COST TO THE DISTRICT.
14. CONTRACTOR TO FURNISH RESILIENT GATE VALVE KEY FOR 2" OPERATING NUT.

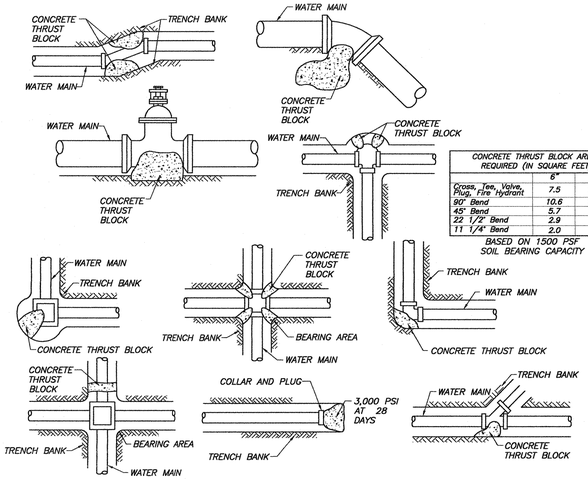

CONCRETE THRUST BLOCK AREAS REQUIRED (IN SQUARE FEET)		
	6"	8"
Cross, Tee, Valve, Plug, Fire Hydrant	7.5	12.9
90° Bend	10.6	18.2
45° Bend	5.7	9.8
22 1/2° Bend	2.9	5.0
11 1/4° Bend	2.0	2.5

BASED ON 1500 PSF SOIL BEARING CAPACITY

E CONCRETE THRUST BLOCK
NOT TO SCALE

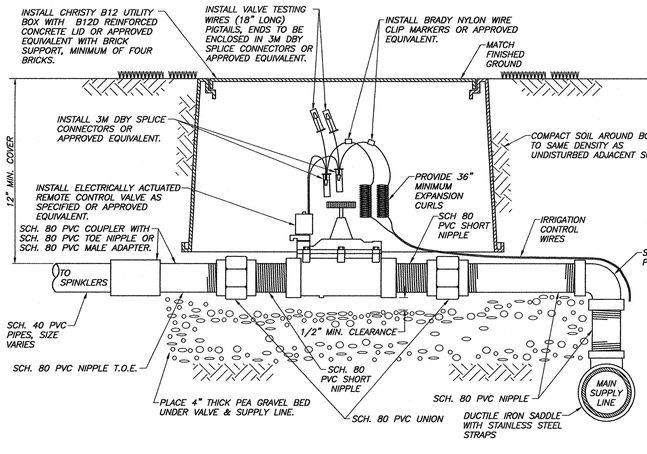

F TYPICAL IRRIGATION VALVE INSTALLATION
NOT TO SCALE

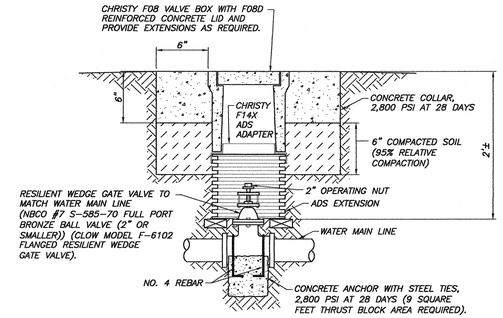

G RESILIENT GATE VALVE AND LID
NOT TO SCALE

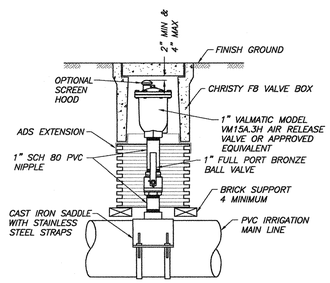

H AIR RELEASE VALVE
NOT TO SCALE

SIMPBK
7591 NORTH INGRAM AVENUE #101 · FRESNO, CALIFORNIA 93711
T559.448.8400 · F559.448.8467 · www.sim-pbk.com

LICENSED ARCHITECT DAVID MICHAEL IWANAGA No. C 17199 3-31-19 RENEWAL DATE STATE OF CALIFORNIA

IDENTIFICATION STAMP DIV. OF THE STATE ARCHITECT 02-117009 AC RLS PE SE DATE 7/23/18

FILE: 5442
PTN: 72009-05

E:\18-28 Monson-Sultana JUSD\VB-Logo-B&W.jpg

REGISTERED PROFESSIONAL ENGINEER ALAN K. MOK No. 42618 EXP. 3/30/19 CIVIL STATE OF CALIFORNIA

PROJECT NAME
MONSON-SULTANA ELEMENTARY RELOCATABLE
10643 AVENUE 416, SULTANA, CA 93666

PROJECT DEVELOPMENT

DATE	DESCRIPTION
.	.
.	.
.	.

REVISIONS

No.	DATE	DESCRIPTION
.	.	.
.	.	.
.	.	.

Alan Mok, PE, PLS, LEED AP
Principal
7415 N. PALM AVENUE #101
FRESNO, CALIFORNIA 93711
Tel. 559-432-6879
Fax. 559-432-6897
www.alanmokengineering.com
Alan Mok Engineering

SHEET NAME
IRRIGATION AND LANDSCAPE DETAILS

PROJECT ARCHITECT	PROJECT NUMBER	SHEET NUMBER
DAVID IWANAGA	18-28	C7
DRAWN BY	SCALE	
CHECKED BY	DATE	
	07.17.18	

P:\2018 PROJECTS\218-0184\DRAWINGS\PRODUCTION DRAWINGS\218-0184_IRR DT.DWG
PLOT: 7/13/2018 11:46 AM BY VANIDA BEGY

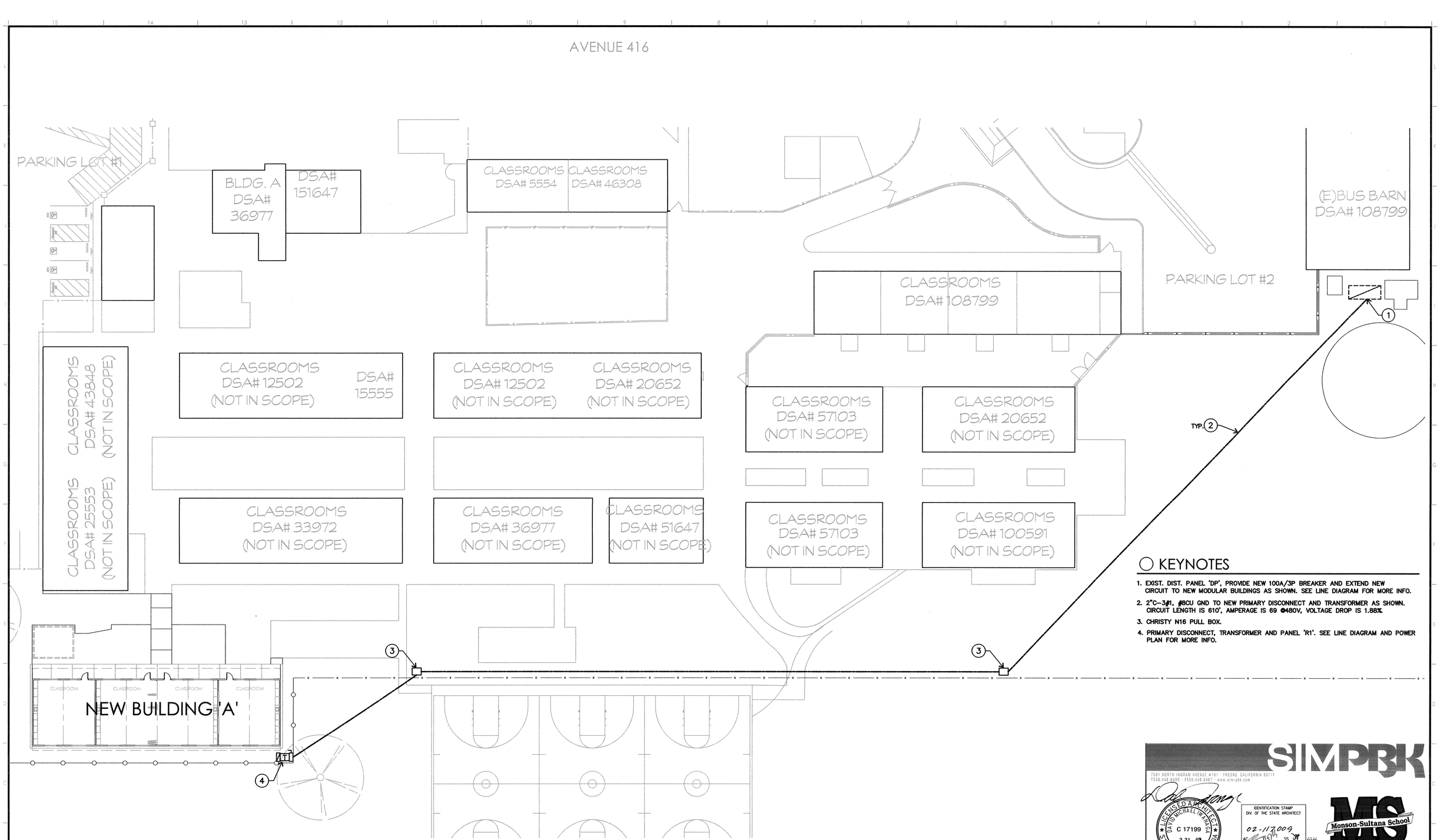

○ KEYNOTES

1. EXIST. DIST. PANEL 'DP', PROVIDE NEW 100A/3P BREAKER AND EXTEND NEW CIRCUIT TO NEW MODULAR BUILDINGS AS SHOWN. SEE LINE DIAGRAM FOR MORE INFO.
2. 2"C-3#1, #8CU GND TO NEW PRIMARY DISCONNECT AND TRANSFORMER AS SHOWN. CIRCUIT LENGTH IS 610', AMPERAGE IS 69 @480V, VOLTAGE DROP IS 1.88%.
3. CHRISTY N16 PULL BOX.
4. PRIMARY DISCONNECT, TRANSFORMER AND PANEL 'R1'. SEE LINE DIAGRAM AND POWER PLAN FOR MORE INFO.

SITE PLAN - ELECTRICAL

SCALE: 1" = 20'-0"

SIMPBK
7591 NORTH INGRAM AVENUE #101 · FRESNO, CALIFORNIA 93711
T559.448.8490 · F559.448.8487 · www.sim-pbk.com

LICENSED ARCHITECT
DAVID MICHAEL IWANAGA
C 17199
3-31-19
RENEWAL DATE
STATE OF CALIFORNIA

IDENTIFICATION STAMP
DIV. OF THE STATE ARCHITECT
02-117009
AC
DATE 7/23/18
FILE/PIN:

Monson-Sultana School

PROJECT NAME
MONSON-SULTANA ELEMENTARY RELOCATABLE
10643 AVENUE 416, SULTANA, CA 93666

DATE	DESCRIPTION	PROJECT DEVELOPMENT	No.	DATE	DESCRIPTION	REVISIONS

SHEET NAME
ELECTRICAL SITE PLAN

DAVID IWANAGA (PROJECT ARCHITECT)	18-28 (PROJECT NUMBER)		E-1 (SHEET NUMBER)
JEFF GRAHAM (DRAWN BY)	AS NOTED (SCALE)		
DAVID IWANAGA (CHECKED BY)	06/15/18 (DATE)		

○ KEYNOTES

1. PORTABLE BUILDING PANEL PROVIDED BY BUILDING MANUFACTURER. CIRCUIT AND GROUND/BOND AS SHOWN.
2. RISE AT BUILDING WALL AND "LB" INTO BACK OF FLUSH MOUNT INTERIOR PANEL WITH 1 1/4"C–3#2, #8CU GND FROM PULL BOX TO BUILDING PANEL.
3. PANEL GROUND AND BUILDING BOND. SEE DETAILS FOR MORE INFO.
4. (4)1 1/4"C–3#2, #8CU GND FROM 'R1' TO BUILDING PANEL.
5. (3)1 1/4"C–3#2, #8CU GND FROM 'R1' TO BUILDING PANEL.
6. (2)1 1/4"C–3#2, #8CU GND FROM 'R1' TO BUILDING PANEL.
7. INCOMING 100A CIRCUIT FROM EXIST. 1200A–480/277V DIST. PANEL 'DP'. SEE LINE DIAGRAM FOR MORE INFO.
8. NEW TRANSFORMER 'TR1' AND PANEL 'R1' FOR MUDULAR BUILDINGS POWER. SEE LINE DIAGRAM AND DETAIL FOR MORE INFO.

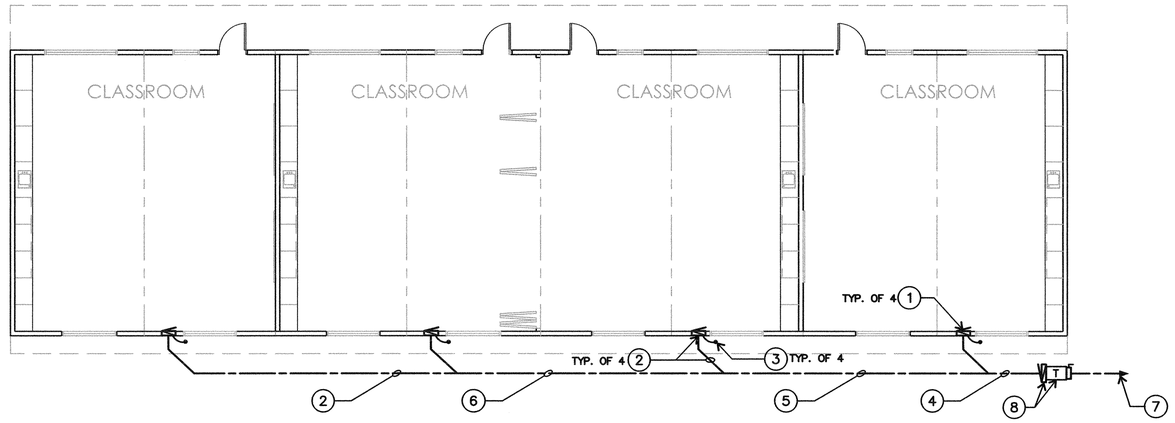

FLOOR PLAN - POWER

SCALE: 1/8" = 1'–0"

PANEL: R1			MAIN: 200A	PHASE: 3PH	MOUNTING: SURFACE		
VOLTAGE: 120/208V			AMPS: 200A	WIRE: 4W	NEMA 3R		
CIR NO.	BREAKER AMPS	POLE	CIRCUIT DESCRIPTION	WATTS PHASE A	PHASE B	PHASE C
1	100A	2P	CLASSROOM 1	7150		
2	100A	2P	CLASSROOM 2	7150		
3	---	---	CKT NO 1		7150	
4	---	---	CKT NO 2		7150	
5	100A	2P	CLASSROOM 3			
6			SPACE			7150
7	---	---	CKT NO 5	7150		
8			SPACE			
9	100A	2P	CLASSROOM 4		7150	
10			SPACE			
11	---	---	CKT NO 9			7150
12			SPACE			
13			SPACE			
14			SPACE			
15			SPACE			
16–30	SPACE					
			CONNECTED LOAD	21450	21450	14300
			TOTAL AMPS		159A	

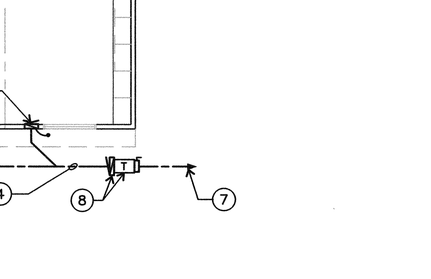

ONE LINE DIAGRAM
NTS

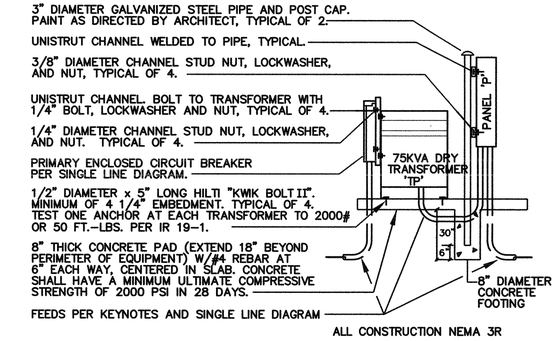

ALL CONSTRUCTION NEMA 3R

TRANSFORMER/PANEL MOUNTING

NO SCALE

ELECTRICAL GENERAL NOTES

1 ALL POWER INTERRUPTIONS SHALL BE SCHEDULED WITH OWNER IN ADVANCE.

2. ALL NEW CONDUITS SHALL BE CONCEALED, UNLESS OTHERWISE NOTED. WHERE CONDUITS ARE TO BE INSTALLED IN EXISTING WALLS, WALLS SHALL BE CUT AND PATCHED WITH FINISH TO MATCH ADJACENT SURFACES.

3. CONTRACTOR SHALL EXAMINE THE SITE PRIOR TO BID AND ACCEPT RESPONSIBILITY TO ADAPT THE WORK AS SHOWN ON THESE PLANS TO EXISTING BUILDING CONDITION.

4. CONDUIT RUNS ARE TO BE CONSIDERED DIAGRAMMATIC ONLY. DURING THE COURSE OF CONSTRUCTION HIDDEN PULLBOXES AND DIFFERENT ROUTING MAY BE REQUIRED.

5. THE CONTRACTOR SHALL DETERMINE EXISTING CONDITIONS AND MAKE NECESSARY ADJUSTMENTS AS REQUIRED TO COMPLY WITH CODE REQUIREMENTS AND TO ACCOMPLISH THE INTENT OF THESE PLANS. ALL CHANGES SHALL BE RECORDED ON AS–BUILT DRAWINGS.

6. ANY SIGNIFICANT DEPARTURES FROM WHAT IS INDICATED SHALL BE REPORTED TO THE ARCHITECT PRIOR TO PROCEEDING WITH THE WORK.

7. ALL WORK AND MATERIAL SHALL CONFORM TO LATEST CODES AND ORDINANCES, IT IS THE INTENTION OF THESE PLANS AND SPECIFICATIONS TO COVER ALL THINGS REQUIRED TO PROVIDE COMPLETE AND OPERATIVE SYSTEMS.

8. ALL OUTLET BOXES IN FIRE RESISTIVE ASSEMBLIES SHALL BE MADE OF STEEL AND A MAXIMUM OF 16 SQ. IN. AND BE SEPARATED BY MINIMUM OF 24 INCHES HORIZONTALLY. ALL PENETRATIONS SHALL BE FIRE STOPPED WITH AN APPROVED LISTED SYSTEM.

9. a. CONDUIT MAY BE GALVANIZED RIGID STEEL CONDUIT, INTERMEDIATE METAL CONDUIT, RIGID ALUMINUM CONDUIT OR, ELECTRICAL METALLIC TUBING EXCEPT AS OTHERWISE SPECIFIED.
   b. RIGID NONMETALLIC CONDUIT (SCHEDULE 40 PVC) SHALL BE USED UNDERGROUND AND WHERE IMBEDDED IN CONCRETE. STEEL, LONG RADIUS 90'S SHALL BE USED FOR PENETRATIONS THROUGH SLABS.
   c. LIQUIDTIGHT FLEXIBLE METAL CONDUIT SHALL BE USED FOR FINAL CONNECTIONS TO MOTORS, APPLIANCES AND VIBRATING EQUIPMENT.
   d. ELECTRICAL METALLIC TUBING MAY BE UTILIZED IN ALL INTERIOR LOCATIONS. S.S. FITTINGS WILL BE UTILIZED FOR TUBING IN 1–1/2" TRADE SIZE AND SMALLER, DOUBLE SET SCREW TYPE FOR LARGER TUBING.
   e. ELECTRICAL SUBCONTRACTOR TO SIZE ALL CONDUIT PER NEC.

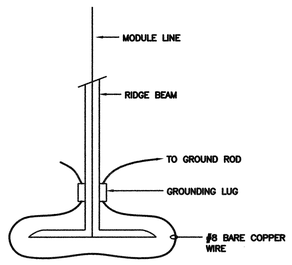

PORTABLE BLDG. BONDING DETAIL

NO SCALE

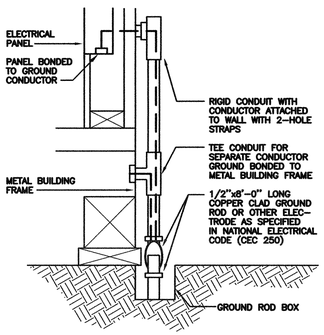

PORTABLE BLDG. GROUNDING DETAIL

NO SCALE

GROUND NOTES:

1. SIZE OF CONDUCTORS SHALL COMPLY WITH C.E.C. TABLE 250–95.
2. BOND SEPARATE CONDUCTORS FROM GROUND ROD TO ELECTRICAL PANEL AND TO METAL BUILDING FRAME (C.E.C. 250–81) IN ADDITION TO THE DETAIL SHOWN ABOVE. BOND THE ELECTRICAL GROUND TO METAL WATER PIPE EMBEDDED AT LEAST 10 FT. INTO THE SOIL IF AVAILABLE (C.E.C. 250–81 & 250–83).
3. ALL MODULES OF METAL FRAME BUILDINGS SHALL BE ELECTRICALLY BONDED TOGETHER (BOLTING ONLY IS NOT ACCEPTABLE BONDING).
4. CHECK RESISTANCE TO GROUND. IF RESISTANCE EXCEEDS 25 OHMS, INSTALL ADDITIONAL GROUND RODS WITH CONDUCTORS AS SHOWN, SEPERATED AT LEAST 6'–0" UNTIL RESISTANCE IS REDUCED TO 25 OHMS OR LESS (C.E.C. 250–81).

SIMPBK
2691 NORTH INGRAM AVENUE #101 · FRESNO, CALIFORNIA 93711
(559) 448-8400 · FAX (559) 448-8402 · www.sim-pbk.com

LICENSED ARCHITECT · DAVID MICHAEL IWANAGA · C 17199 · 3-31-19 RENEWAL DATE · STATE OF CALIFORNIA

IDENTIFICATION STAMP
DIV. OF THE STATE ARCHITECT
02-117009
AC FLS MM SS JH
DATE 7/25/18
ELEC PLBG

Monson-Sultana School

PROJECT NAME
MONSON-SULTANA ELEMENTARY RELOCATABLE
10643 AVENUE 416, SULTANA, CA 93666

DATE	DESCRIPTION	PROJECT DEVELOPMENT	No.	DATE	DESCRIPTION	REVISIONS

SHEET NAME
POWER PLAN

DAVID IWANAGA	PROJECT ARCHITECT	18-28	PROJECT NUMBER	SHEET NUMBER
JEFF GRAHAM	DRAWN BY	AS NOTED	SCALE	E-2
DAVID IWANAGA	CHECKED BY	06/15/18	DATE	

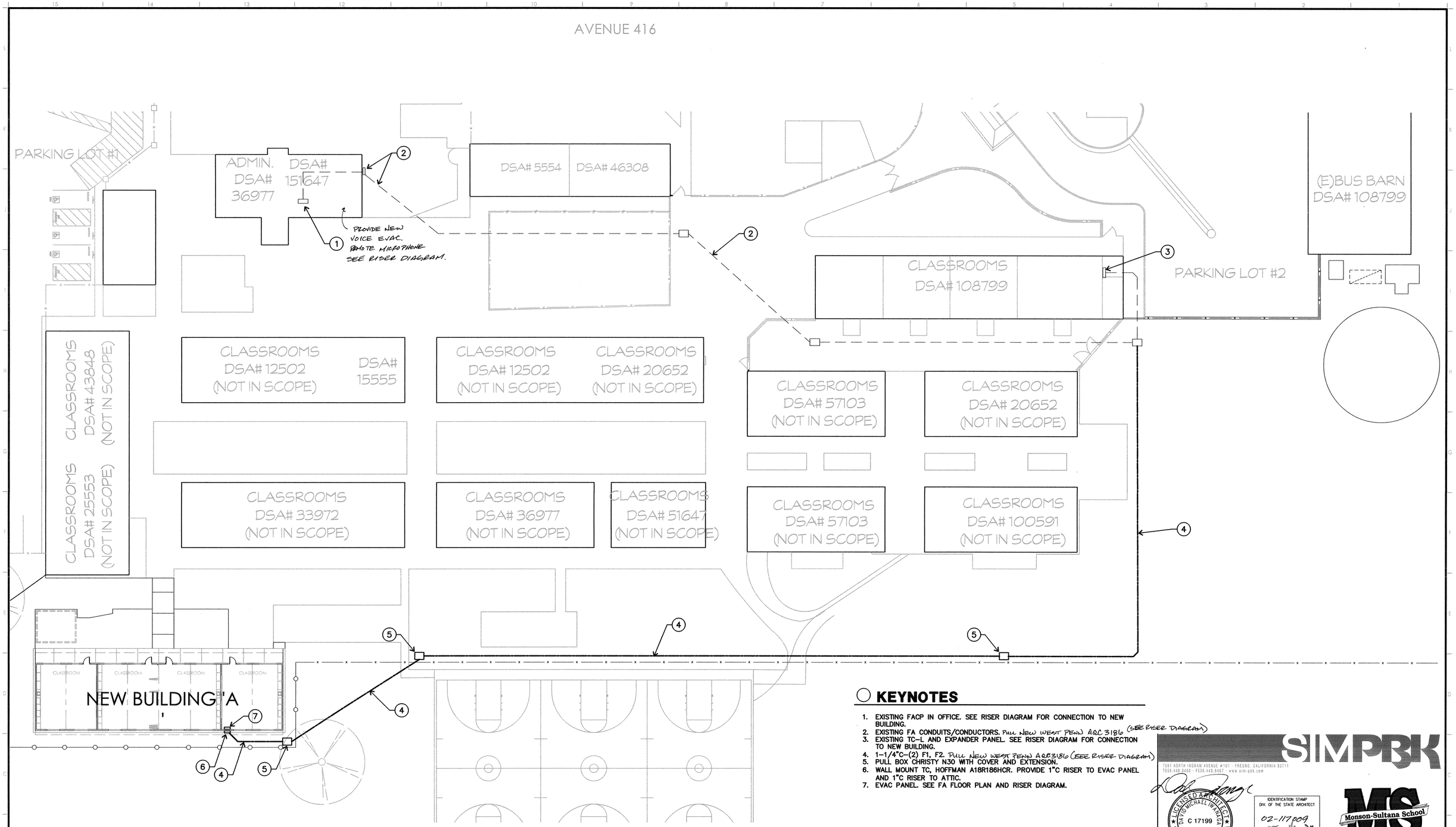

KEYNOTES

1. EXISTING FACP IN OFFICE. SEE RISER DIAGRAM FOR CONNECTION TO NEW BUILDING.
2. EXISTING FA CONDUITS/CONDUCTORS. PULL NEW WEST PENN AQC 3186 (SEE RISER DIAGRAM)
3. EXISTING TC-L AND EXPANDER PANEL. SEE RISER DIAGRAM FOR CONNECTION TO NEW BUILDING.
4. 1-1/4"C-(2) F1, F2. PULL NEW WEST PENN AQC3186 (SEE RISER DIAGRAM)
5. PULL BOX CHRISTY N30 WITH COVER AND EXTENSION.
6. WALL MOUNT TC, HOFFMAN A18R186HCR. PROVIDE 1"C RISER TO EVAC PANEL AND 1"C RISER TO ATTIC.
7. EVAC PANEL. SEE FA FLOOR PLAN AND RISER DIAGRAM.

SITE PLAN - FIRE ALARM

SCALE: 1" = 20'-0"

SIMPBK
7591 NORTH INGRAM AVENUE #101 · FRESNO, CALIFORNIA 93711
T559.448.8400 · F559.448.8467 · www.sim-pbk.com

LICENSED ARCHITECT DAVID MICHAEL IWANAGA C 17199 3-31-19 STATE OF CALIFORNIA

IDENTIFICATION STAMP DIV. OF THE STATE ARCHITECT 02-117009 AC PLS DATE 7/23/18 FILE: PTN:

Monson-Sultana School

PROJECT NAME: MONSON-SULTANA ELEMENTARY RELOCATABLE
10643 AVENUE 416, SULTANA, CA 93666

DATE	DESCRIPTION	PROJECT DEVELOPMENT	No.	DATE	DESCRIPTION	REVISIONS

SHEET NAME: FIRE ALARM SITE PLAN

DAVID IWANAGA	PROJECT ARCHITECT	18-28	PROJECT NUMBER
JEFF GRAHAM	DRAWN BY	AS NOTED	SCALE
DAVID IWANAGA	CHECKED BY	06/15/18	DATE

SHEET NUMBER: E-3

○ KEYNOTES

1. VOICE EVAC PANEL. SEE RISER DIAGRAM FOR CONNECTION TO EXISTING FIRE ALARM SYSTEM.
2. 3/4"C-(2)F1.
3. 3/4"C-F2,F3.
4. 3/4"C-F1.
5. FIRE SPRINKLER SYSTEM RISER W/ FLOW AND TAMPER SWITCH SEE RISER DIAGRAM FOR CONNECTION TO FACP.
6. FIRE SPRINKLER SYSTEM BELL. PROVIDE 120V CIRCUIT FROM BUILDING PANEL

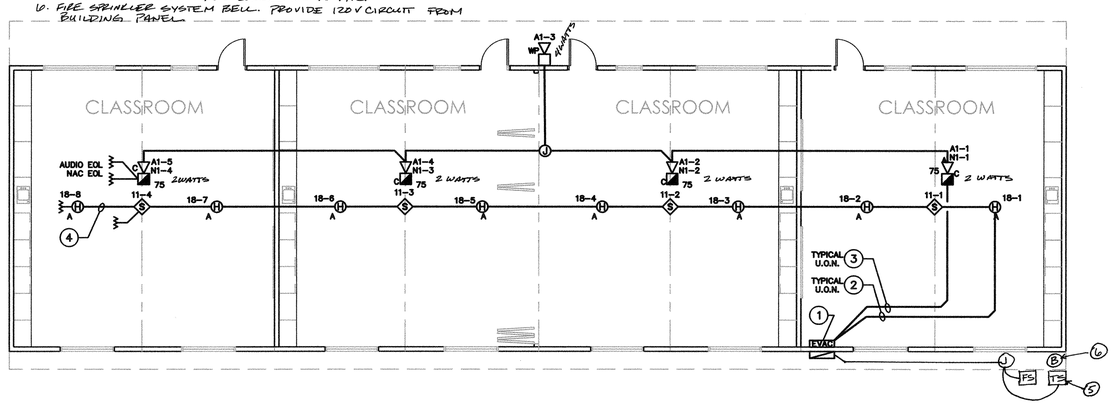

FLOOR PLAN - FIRE ALARM

SCALE: 1/8" = 1'-0"

SIMPBK

7501 NORTH INGRAM AVENUE #101 · FRESNO, CALIFORNIA 93711
T559.448.8400 · F559.448.8467 · www.sim-pbk.com

LICENSED ARCHITECT
DAVID MICHAEL IWANAGA
C 17199
3-31-19
RENEWAL DATE
STATE OF CALIFORNIA

IDENTIFICATION STAMP
DIV. OF THE STATE ARCHITECT
02-117009
AC FLS SS
DATE 7/23/18

FILE:
PTN:

Monson-Sultana School

PROJECT NAME
MONSON-SULTANA ELEMENTARY RELOCATABLE
10643 AVENUE 416, SULTANA, CA 93666

DATE	DESCRIPTION	PROJECT DEVELOPMENT	No.	DATE	DESCRIPTION	REVISIONS

SHEET NAME
FIRE ALARM PLAN

DAVID IWANAGA	PROJECT ARCHITECT	18-28	PROJECT NUMBER
JEFF GRAHAM	DRAWN BY	AS NOTED	SCALE
DAVID IWANAGA	CHECKED BY	06/15/18	DATE

SHEET NUMBER
E-31

FIRE ALARM SYMBOL LIST

SYMBOL	DEVICE DESCRIPTION	MODEL #	MANUFACTURER	C.S.F.M. #
FACP	EXISTING FACP WITH DIGITAL COMMUNICATOR- APPL. No. 106988	SILENT KNIGHT 5208		
	PHOTO SMOKE DETECTOR	2251B	SYSTEM SENSOR	7272-1653:0123
	6" MOUNTING BASE	B210LP	SYSTEM SENSOR	7300-1653:0109
HA	THERMAL SENSOR 190 DEG. FIXED	5251H	SYSTEM SENSOR	7270-1653:0137
	4" FLANGLESS MOUNTING BASE	5251H	SYSTEM SENSOR	7300-1653:0109
EVAC	FIRE ALARM VOICE EVAC PANEL	SP40S	COOPER	6911-0785:0157
*	SPEAKER/ STROBE, MULTI-CANDELA * INDICATES CANDELA SETTING	LSPSTWC3	COOPER	7125-0785:0178
	W.P. SPEAKER	ET-1010-R	COOPER	7320-0785:0105

FIRE ALARM CABLE SCHEDULE

MARK	DESCRIPTION	MFG/PART NO.
F1	IDC CABLE - 2#14 THWN (DRY AND WET LOCATION)	
F2	NAC CABLE - 2#12 THWN (DRY AND WET LOCATION)	
F3	SPEAKER CABLE - 16/2 STP FPL (DRY LOCATION)	WEST PENN 991

FIRE ALARM SYSTEM OPERATION MATRIX

INPUTS	OUTPUTS			
	GENERAL ALARM ACTIVATE EVACUATION SIGNALS/STROBES	ACTIVATE FACP TROUBLE AUDIBLE AND VISUAL SIGNALS	ANNUNCIATE AT FACP AND ALL REMOTE ANNUNCIATORS	SEND SIGNAL TO CENTRAL STATION MONITORING COMPANY
FA SYSTEM AC POWER FAILURE		X	X	X
FA SYSTEM GROUND FAULT, SHORT, OPEN CIRCUIT		X	X	X
SMOKE DETECTOR	X		X	X
HEAT DETECTOR	X		X	X
WATER FLOW	X		X	X
TAMPER SWITCH		X (SUPERVISORY)	X	X

Fire Alarm Control Panel Battery Calculation

EXISTING SILENT KNIGHT FACP		Supervisory Current		Alarm Current	
Qty.	Description	Item	Total	Item	Total
1	Existing FACP Load	0.14980	0.14980	4.94600	4.94600
			0.00000		0.00000
	New Devices	0.00100	0.00000	0.06000	0.00000
4	2251B Smoke Detectors	0.00030	0.00120	0.00650	0.02600
8	2551H Heat Detectors	0.00030	0.00240	0.00650	0.05200
	Total Amps		0.15340		5.02400
24 Hour Supervisory 0.153 x 24 Hrs					3.68160
15 Minute Alarm 5.024 x 0.25					1.25600
Subtotal:					4.93760
25% Safety Factor					1.23440
Total Amp Hour Required					6.17200

Battery Required: NEW 7 Amp Hour

Voice Evac Panel Battery Calculation

				Supervisory Current		Alarm Current	
Qty.	Description	Item Watts	Total Watts	Item	Total	Item	Total
1	SP40S Voice Evac Panel			0.13000	0.13000	0.13000	0.13000
							0.00000
4	LSPSTWC Speaker Strobe (Speaker Only)	2	8			0.15500	0.62000
1	ET-1010-R WP Speaker	4	4				0.00000
							0.00000
	Total Amp Watts						
	Amplifer Power 50 Watts Total Watts		12	Total Amps	0.13000		0.75000
24 Hour Supervisory 0.13000 x 24 Hrs							3.12000
15 Minute Alarm 0.75000 x 0.25							0.18750
Subtotal:							3.30750
20% Safety Factor							0.66150
Total Amp Hour Required							3.96900
Battery Required existing 7 Amp Hour							

Voltage Drop Calculation Formula

Voltage Drop for a given length of conductor = $\frac{\text{I x Feet x 21.6}}{\text{C.M.}}$

Where: **I =** Amperes per terminal of load.
Feet = One way distance in feet measured from source of supply to load.
21.6 = Constant (resistance of conductor @ 10.8 Ohms per L.M. for twice the length).
C.M. = Cross sectional area in circular mils (see chart below).

Wire Size (Awg)	#12	#14	#16
Circular Mils (C.M.)	6530	4110	2580

Voltage Drop Calculation for FACP-E, NAC-N2
Total of Devices:
LSPSTR Speaker Strobe (strobe load only) 75cd 4 x 0.155 = 0.620 amps

Approx. Length: 160 Feet **Total Current Load:** 0.620 Amps

Voltage Drop = $\frac{0.620 \times 160 \times 21.6}{6530} = \frac{2143}{6530} =$ **0.33 Volts Drop**

Percentage of Voltage Dr $\frac{0.33 \text{ Volts}}{24 \text{ Volts}} =$ 0.014 x 100 = **1.37 %**

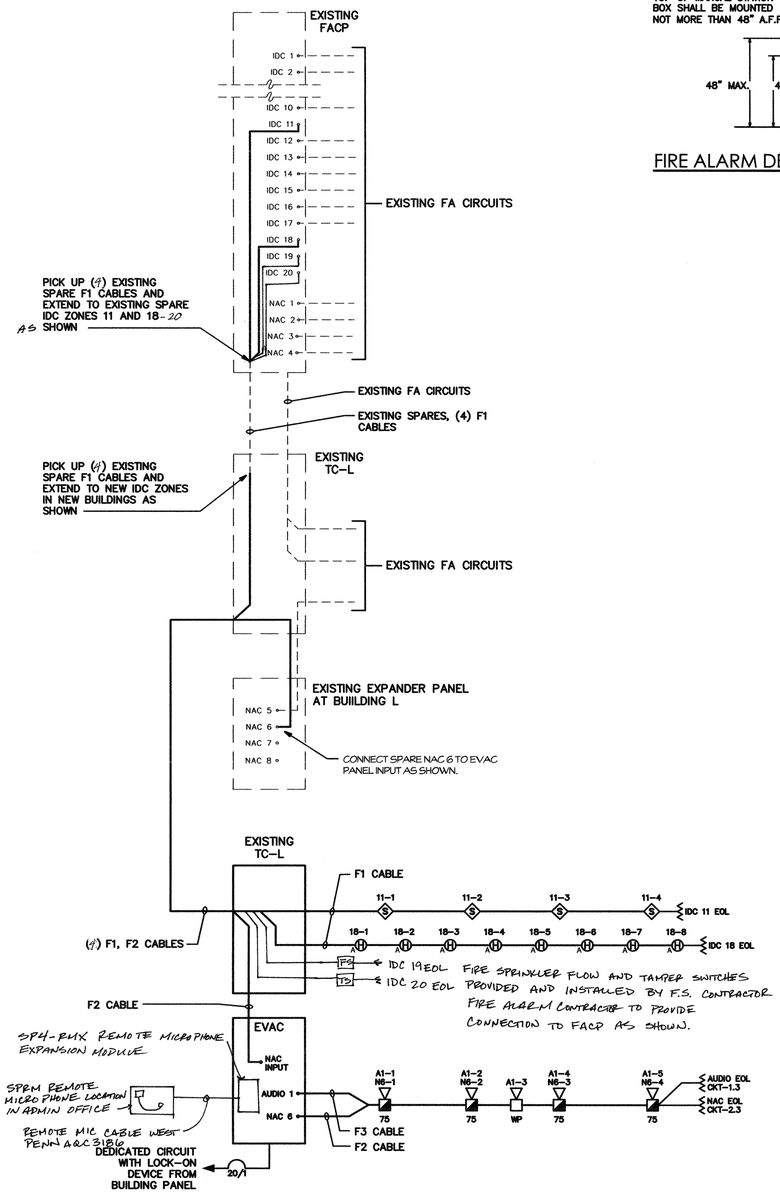

FIRE ALARM RISER DIAGRAM

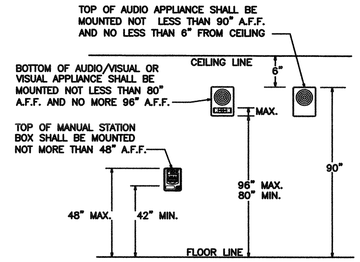

FIRE ALARM DEVICE ELEVATION

SCALE-NONE

FIRE ALARM NOTES

1. ALL WIRING IS SHOWN DIAGRAMMATICALLY. CONTRACTOR MAY VARY SEQUENCE OR CIRCUITRY: HOWEVER, ALL CIRCUITS SHALL BE CONTINUOUS AND SUPERVISED FROM DEVICE TO DEVICE OR FIRE ALARM TERMINAL (FAT) TO DEVICE OR FACP TO FAT OR FAT TO FAT. NO PARALLEL BRANCHING SHALL BE ALLOWED. ANY CONNECTION OF ANY BREAK IN ANY CONDUCTOR SHALL BE BY TERMINAL CONNECTION AT A DEVICE OR AT A FAT ONLY.
2. ALL CONNECTIONS SHALL BE PROPERLY LABELED BY CONDUCTOR AND SHALL HAVE STAKE ON LUG CONNECTORS. PANDUIT TAG (TIE WRAP) SEPARATE.
3. FIRE ALARM TERMINAL CABINETS SHALL HAVE SUFFICIENT SPACE, TERMINAL BOARDS AND SCREW TERMINAL CONNECTORS TO ALLOW CONNECTION OF ALL CONDUCTORS SHOWN.
4. ALL #12 AWG CONDUCTORS SHOWN SHALL BE THHN/THWN STRANDED (19 STRANDS OR LESS) COPPER, INSTALLED IN APPROVED CONDUIT OR RACEWAY UNLESS OTHERWISE NOTED.
5. WRITTEN CERTIFICATION USING NFPA 72 INSPECTION AND TESTING FORM BY THE FIRE ALARM EQUIPMENT DISTRIBUTOR (OR VENDOR OR MANUFACTURER) SHALL BE SUBMITTED TO THE ARCHITECT (WITH COPIES TO THE ELECTRICAL ENGINEER AND THE STATE ARCHITECT) AND THE INSTALLATION INCLUDES TESTING AND OPERATION CONFORMS IN ALL RESPECTS TO THE REQUIREMENTS AS SET FORTH IN TITLE 19 OF THE CALIFORNIA CODE OF REGULATIONS AND PART 3, ARTICLE 760 OF TITLE 24 OF THE C.C.R. THE CONTRACTOR SHALL COMPLETE A FIRE ALARM SYSTEM CERTIFICATION AND DESCRIPTION FORM AND SUBMIT TO DIVISION OF STATE ARCHITECT.
6. UPON COMPLETION OF THE INSTALLATION OF THE FIRE ALARM SYSTEM, A SATISFACTORY TEST OF THE ENTIRE SYSTEM SHALL BE MADE IN THE PRESENCE OF THE ENFORCING AGENCY AND INSPECTOR OF RECORD.
7. ALL UNDERGROUND CONDUITS AND EXTERIOR CONDUITS SHALL HAVE WATER TIGHT FITTING.
8. SMOKE DETECTORS SHALL BE MOUNTED MINIMUM 36" FROM SUPPLY AND RETURN AIR VENTS PER MANUFACTURER'S RECOMMENDATIONS.
9. INSTALLATION OF THE F.A. EQUIPMENT SHALL BE BY THE MANUFACTURERS AUTHORIZED SYSTEM DISTRIBUTOR FOR SALES, SERVICE, INSTALLATION AND MAINTENANCE. PROVIDE MFG. CERTIFICATIONS WITH EQUIPMENT SUBMITTALS. SUBMITTALS BY FIRMS NOT FULFILLING THIS REQUIREMENT WILL BE AUTOMATICALLY REJECTED.
10. THE CERTIFIED INSTALLER WILL BE REQUIRED TO PROVIDE ALL FACTORY WARRANTIES AT THE CLOSE UP OF THE PROJECTS.
11. PROVIDE A FIRE ALARM AND ZONE MAP TO REFLECT NEW INSTALLATION. ZONE MAP SHALL BE LOCATED ADJACENT TO FACP/ANNUNCIATOR.
12. FIRE ALARM SYSTEM INSTALLATION SHALL CONFORM TO (2013) NFPA 72 AND SHALL BE MONITORED PER SB 575 REQUIREMENTS. DISTRICT TO SET UP ACCOUNT WITH CENTRAL STATION AND DEFRAY ALL COST.E
13. ALL FIRE ALARM CONDUCTORS SHALL BE INSTALLED IN MIN. 3/4" CONDUIT OR APPROVED RACEWAY.
14. PROVIDE AN ACCESS PANEL FOR ALL HEAT DETECTORS MOUNTED IN AN INACCESSIBLE ATTIC SPACE.
15. FIRE ALARM FINAL TEST SHALL INCLUDE ALL INFORMATION PER NFPA 72, CHAPTER 14 READ OUT VERIFICATION FORM FROM CENTRAL STATION.
16. ALL FIRE ALARM CONTROL PANELS AND POWER SUPPLIES SHALL BE SUPPLIED BY A DEDICATED POWER CIRCUIT WITH A RED COLORED CIRCUIT BREAKER AND MECHANICALLY PROTECTED WITH A LOCKOUT DEVICE. CIRCUIT SHALL BE IDENTIFIED AS "FIRE ALARM CIRCUIT" ON POWER PANEL DIRECTORY. LOCATION OF PANEL/BREAKER SHALL BE PERMANENTLY IDENTIFIED AT FACP AND POWER PANELS.

SIMPBK
7591 NORTH INGRAM AVENUE #101 - FRESNO, CALIFORNIA 93711
T559.448.8400 - F559.448.8407 - www.sim-pbk.com
LICENSED ARCHITECT - DAVID MICHAEL IWANAGA - C 17199 - 3-31-19 RENEWAL DATE - STATE OF CALIFORNIA

IDENTIFICATION STAMP
DIV. OF THE STATE ARCHITECT
02-117009
AC ___ SS ___
DATE 7/25/18
FILE: PTN:

Monson-Sultana School

PROJECT NAME
MONSON-SULTANA ELEMENTARY RELOCATABLE
10643 AVENUE 416, SULTANA, CA 93666

DATE	DESCRIPTION	PROJECT DEVELOPMENT	No.	DATE	DESCRIPTION	REVISIONS

SHEET NAME
FIRE ALARM DETAIL

PROJECT ARCHITECT	PROJECT NUMBER	SHEET NUMBER
DAVID IWANAGA	18-28	E-32
DRAWN BY: JEFF GRAHAM	SCALE: AS NOTED	
CHECKED BY: DAVID IWANAGA	DATE: 06/15/18	

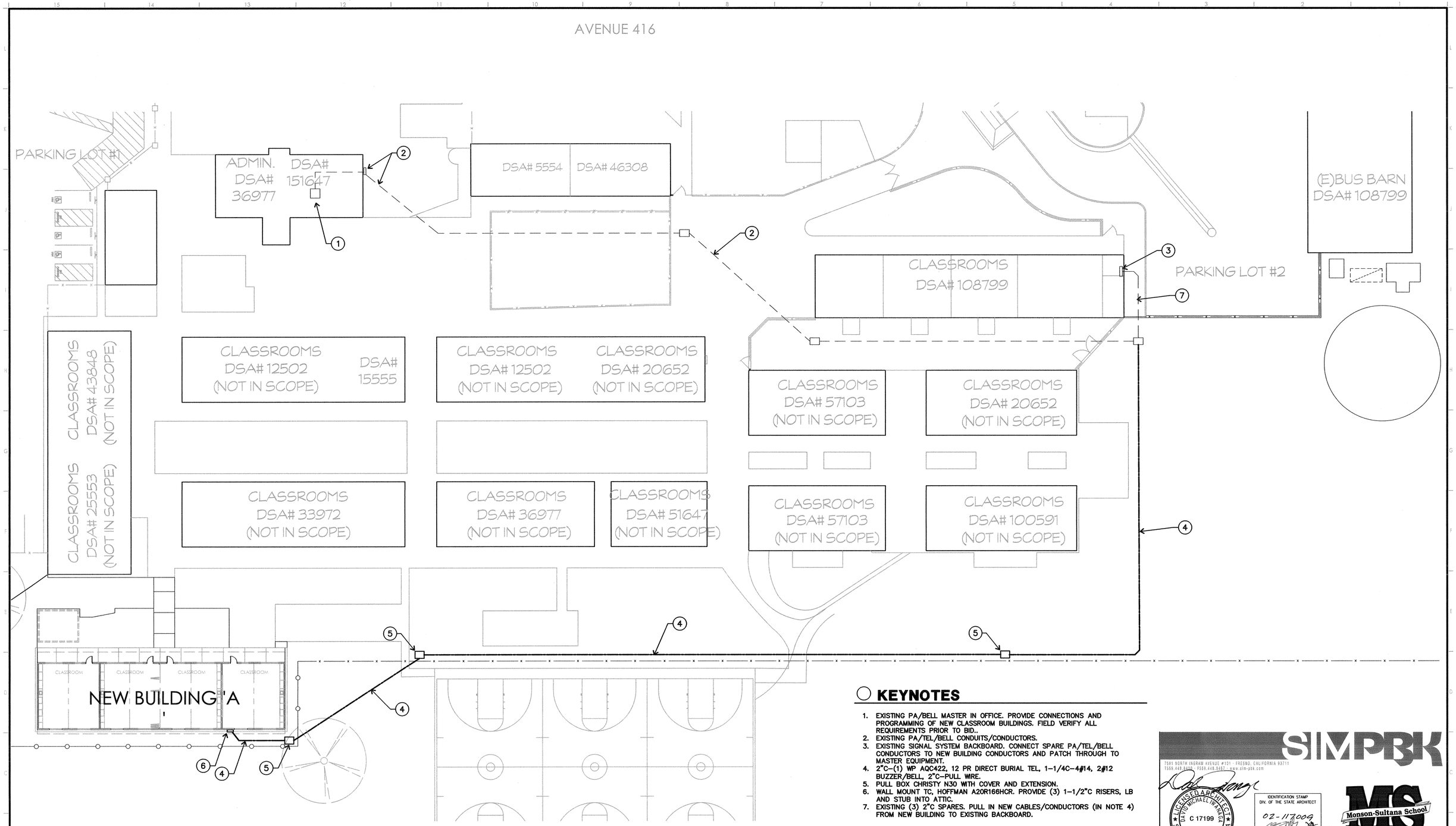

KEYNOTES

1. EXISTING PA/BELL MASTER IN OFFICE. PROVIDE CONNECTIONS AND PROGRAMMING OF NEW CLASSROOM BUILDINGS. FIELD VERIFY ALL REQUIREMENTS PRIOR TO BID..
2. EXISTING PA/TEL/BELL CONDUITS/CONDUCTORS.
3. EXISTING SIGNAL SYSTEM BACKBOARD. CONNECT SPARE PA/TEL/BELL CONDUCTORS TO NEW BUILDING CONDUCTORS AND PATCH THROUGH TO MASTER EQUIPMENT.
4. 2"C–(1) WP AQC422, 12 PR DIRECT BURIAL TEL, 1–1/4C–4#14, 2#12 BUZZER/BELL, 2"C–PULL WIRE.
5. PULL BOX CHRISTY N30 WITH COVER AND EXTENSION.
6. WALL MOUNT TC, HOFFMAN A20R166HCR. PROVIDE (3) 1–1/2"C RISERS, LB AND STUB INTO ATTIC.
7. EXISTING (3) 2"C SPARES. PULL IN NEW CABLES/CONDUCTORS (IN NOTE 4) FROM NEW BUILDING TO EXISTING BACKBOARD.

SITE PLAN - SIGNAL/COMMUNICATION

SCALE: 1" = 20'–0"

SIMPBK
7591 NORTH INGRAM AVENUE #101 · FRESNO, CALIFORNIA 93711
T559.448.8400 F559.448.8427 · www.simpbk.com

LICENSED ARCHITECT
DAVID MICHAEL IWANAGA
C 17199
3-31-19 RENEWAL DATE
STATE OF CALIFORNIA

IDENTIFICATION STAMP
DIV. OF THE STATE ARCHITECT
02-117009
AC. TLS SS
DATE 7/23/18
FILE: PTN:

Monson-Sultana School

PROJECT NAME
MONSON-SULTANA ELEMENTARY RELOCATABLE
10643 AVENUE 416, SULTANA, CA 93666

DATE	DESCRIPTION	PROJECT DEVELOPMENT	No.	DATE	DESCRIPTION

REVISIONS

SHEET NAME
SIGNAL/COMMUNICATION SITE PLAN

PROJECT ARCHITECT	PROJECT NUMBER	SHEET NUMBER
DAVID IWANAGA	18-28	E-4
DRAWN BY: JEFF GRAHAM	SCALE: AS NOTED	
CHECKED BY: DAVID IWANAGA	DATE: 06/15/18	

○ KEYNOTES

1. PA SPEAKER OUTLET: 1-GANG CUT-IN BOX WITH 3/4"C STUB WITH INSULATED BUSHING END TO ACCESSIBLE ATTIC. PROVIDE WP-355 BACK TO TC AND CROSS CONNECT TO BACKBONE CABLE. SUPPORT CABLE ABOVE CEILING ON J-HOOKS.
2. WIRELESS ACCESS OUTLET IN CEILING; 1-GANG BOX WITH T-BAR BRIDGE. PROVIDE CAT6 JACK AND CABLE AND CONNECT TO EXISTING IDF.
3. DATA OUTLET; 1-GANG CUT-IN BOX WITH 3/4"C STUB WITH INSULATED BUSHING END TO ACCESSIBLE ATTIC. PROVIDE (2) CAT6 JACKS AND CABLES AND CONNECT TO IDF.
4. TEL OUTLET; 1-GANG CUT-IN BOX WITH 3/4"C STUB WITH INSULATED BUSHING END TO ACCESSIBLE ATTIC. PROVIDE CAT6 JACK AND CABLE AND CONNECT TO 12 PR BACKBONE CABLE IN TC. BOTTOM OF BOX @ +15" A.F.F.
5. PROVIDE BATTERY CLOCK TO MATCH EXISTING.
6. TERMINAL CABINET. SEE SITE PLAN FOR DETAILS.
7. PRIOR TO INSTALLATION OF ALL SIGNAL DEVICES/OUTLETS VERIFY LOCATIONS WITH DISTRICT.
8. WALL MOUNTED IDF CABINET; MIDDLE ATLANTIC DWR-12-26/VFD-12 WITH PANDUIT FMD1 FIBER DRAWER WITH (1) FAP3WEIDSC AND (3) FAPB ADAPTER PANELS, CPP48FMWBLY MODULAR PATCH PANEL WITH MINI-COM CAT 6 JACKS, CMPH2 FRONT/REAR AND CMPHF2 FRONT CABLE MANAGEMENT, UTP62.5MBU CAT 6A PATCH CORDS FOR EACH JACK. MOUNT IDF 6'-6" AFF . PROVIDE BACKING AS REQUIRED. TEST ALL CABLES/JACKS PER INDUSTRY STANDARDS. COORDINATE MATERIAL AND WORK WITH DISTRICT IT DIRECTOR.
9. FLUSH MOUNT BUZZER BEHIND BATTERY CLOCK. BUZZER TO MATCH EXISTING.
10. BELL TO MATCH EXISTING.
11. 3/4"C-2#12 (BELL), 3/14 (BUZZER) TYPICAL.

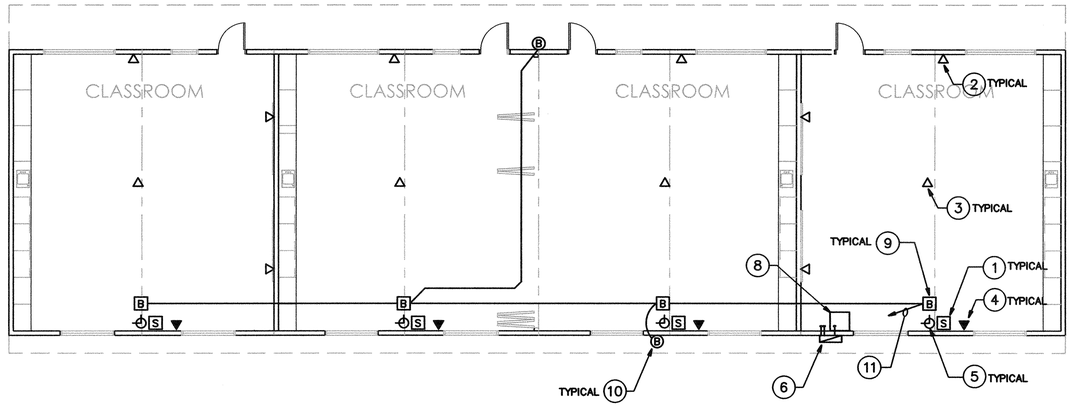

FLOOR PLAN - SIGNAL/COMMUNICATION

SCALE: 1/8" = 1'-0"

SIMPBK
7591 NORTH INGRAM AVENUE #101 · FRESNO, CALIFORNIA 93711
T559.448.8400 · F559.448.8467 · www.sim-pbk.com

LICENSED ARCHITECT
DAVID MICHAEL IWANAGA
C 17199
3-31-19
RENEWAL DATE
STATE OF CALIFORNIA

IDENTIFICATION STAMP
DIV. OF THE STATE ARCHITECT
02-117009
AC FLS SS
DATE 7/23/18
FILE:
PTN:

Monson-Sultana School

PROJECT NAME
MONSON-SULTANA ELEMENTARY RELOCATABLE
10643 AVENUE 416, SULTANA, CA 93666

DATE	DESCRIPTION	PROJECT DEVELOPMENT	No. DATE	DESCRIPTION	REVISIONS

SHEET NAME
SIGNAL/COMMUNICATION PLAN

DAVID IWANAGA	PROJECT ARCHITECT	18-28	PROJECT NUMBER
JEFF GRAHAM	DRAWN BY	AS NOTED	SCALE
DAVID IWANAGA	CHECKED BY	06/15/18	DATE

SHEET NUMBER
E-41

NEW CLASSROOM BUILDING

MONSON - SULTANA ELEMENTARY SCHOOL

MONSON - SULTANA JOINT UNION ELEMENTARY SCHOOL DISTRICT

10643 AVENUE 416, DINUBA, CA 93618

CLASSROOM BUILDING @ 119'-0" X 32'-0"

BUILDING DATA

DESIGN LOADS: PER 2013 CBC

ROOF: DEAD LOAD = 22 psf
LIVE LOAD = 20 psf (REDUCIBLE)

FLOOR: ☒ LIVE LOAD = 50 psf (FLOOR OPTION 1)

WALLS: DEAD LOAD = 13 psf

SNOW: ☒ GROUND SNOW LOAD, Pg = 23.8 psf
☒ FLAT ROOF SNOW LOAD, P = 20 psf (OPTION 1)
SNOW EXPOSURE FACTOR, C_e = 1.2 (SEE 51.1)
SNOW LOAD IMPORTANCE FACTOR, I = 1.00
THERMAL FACTOR, C_t = 1.00

WIND: BASIC WIND SPEED (3-sec GUST), V = 110 mph
WIND IMPORTANCE FACTOR, I = 1.00
OCCUPANCY CATEGORY: II
WIND EXPOSURE: C

SEISMIC: SEISMIC IMPORTANCE FACTOR, I = 1.00
OCCUPANCY CATEGORY: II
MAPPED SPECTRAL RESPONSE ACCELERATION, Ss = 0.514g
MAPPED SPECTRAL RESPONSE ACCELERATION, S_1 = 0.231g
SITE CLASS: D
SPECTRAL RESPONSE COEFFICIENT, S_{DS} = 0.476g
SPECTRAL RESPONSE COEFFICIENT, S_{D1} = 0.298g
SEISMIC DESIGN CATEGORY: D
BASIC SEISMIC-FORCE-RESISTING SYSTEM: ORDINARY STEEL METAL FRAME
DESIGN BASE SHEAR, V = 0.33 W
RESPONSE MODIFICATION FACTOR, R = 3.5
ANALYSIS PROCEDURE USED: EQUIVALENT LATERAL FORCE PROCEDURE.

OCCUPANCY: E – CLASSROOMS

TYPE OF CONSTRUCTION: VB

BUILDING AREA PROPOSED: 3,808 S.F.

SPRINKLER SYSTEM: YES

ONLY CHECKED BOXES APPLY TO THIS PROJECT

☒ §118(a) INSTALLED INSULATING MATERIAL SHALL HAVE BEEN CERTIFIED BY THE MANUFACTURER TO COMPLY WITH THE CALIFORNIA QUALITY STANDARDS FOR INSULATING MATERIAL, TITLE 20, CHAPTER 4, ARTICLE 3.

☒ §118(c) SPREAD RATING AND SMOKE DENSITY REQUIREMENTS OF CHAPTER 7 AND 719 OF TITLE 24, PART 2.

☒ §117(a) ALL EXTERIOR JOINTS AND OPENINGS IN THE BUILDING THAT ARE OBSERVABLE SOURCES OF AIR LEAKAGE SHALL BE CAULKED, GASKETED, WEATHERSTRIPPED, OR OTHERWISE SEALED.

☐ §116(b) SITE CONSTRUCTED DOORS, WINDOWS AND SKYLIGHTS SHALL BE CAULKED BETWEEN THE UNIT AND THE BUILDING, AND SHALL BE WEATHERSTRIPPED (EXCEPT FOR UNFRAMED GLASS DOORS AND FIRE DOORS).

☒ §116(b) MANUFACTURED DOORS AND WINDOWS INSTALLED SHALL HAVE AIR INFILTRATION RATES NOT EXCEEDING THOSE SHOWN IN TABLE NUMBER 1-E OF THE STANDARDS. MANUFACTURED FENESTRATION PRODUCTS MUST BE LABELED FOR U-VALUE ACCORDING TO NFRC PROCEDURES.

☒ §118(e) DEMISING WALLS IN NON-RESIDENTIAL BUILDINGS: THE OPAQUE PORTIONS OF FRAMED DEMISING WALLS IN NON-RESIDENTIAL BUILDINGS SHALL HAVE INSULATION WITH AN INSTALLED R-VALUE NO LESS THAN R-19 BETWEEN FRAMING MEMBERS.

SITE SPECIFIC PROVISIONS:
LOCATION OF BUILDING SHALL COMPLY WITH C.B.C CHAPTER(S) 3, 5, 7, 7A, 10, 11, & 14 RELATIVE TO THE BUILDING'S PROXIMITY TO ADJACENT STRUCTURES AND PROPERTY LINES, EXTERIOR WALL AND OPENING PROTECTION, ALLOWABLE FLOOR AREA AND ACCESS TO PUBLIC RIGHT OF WAY. A SEPARATE APPLICATION SHALL BE FILED WITH DSA WHEN THIS BUILDING IS TO BE PLACED UPON A SPECIFIC SITE. IT SHALL BE THE RESPONSIBILITY OF THE SITE'S ARCHITECT OR ENGINEER OF RECORD TO PLACE THE PROPOSED STRUCTURES IN ACCORDANCE WITH ALL APPLICABLE CODES AND ORDINANCES AND TO DETERMINE EXTERIOR WALL AND OPENING PROTECTION, IN ACCORDANCE WITH THE C.B.C.. IF A CHANGE OF OCCUPANCY OR IF MULTIPLE OCCUPANCIES ARE REQUIRED FOR A SPECIFIC SITE, DRAWINGS MUST BE SUBMITTED TO DSA FOR APPROVAL.

THIS BUILDING IS DESIGNATED AS:
☒ PERMANENT
☐ TEMPORARY
☐ DAY CARE USE

GENERAL NOTES

NOTHING IN THE DRAWINGS AND/OR THE SPECIFICATIONS SHALL BE CONSTRUED TO PERMIT AN INSTALLATION THAT COULD BE IN VIOLATION OF THE APPLICABLE CODES, ORDINANCES, REGULATIONS, RESTRICTIONS, ETC.

THE CONTRACTOR SHALL VERIFY ALL DIMENSIONS IN THE FIELD AND SHALL NOTIFY THE ARCHITECT OF ANY DISCREPANCIES IMMEDIATELY. DISCREPANCIES BETWEEN FIELD CONDITIONS AND THE DRAWINGS SHALL CAUSE THE CONTRACTOR TO NOTIFY THE ARCHITECT PRIOR TO MAKING ANY CHANGES IN THE WORK.

THE DRAWINGS, IDEAS, DESIGNS AND ARRANGEMENTS REPRESENTED HEREBY ARE AND SHALL REMAIN THE PROPERTY OF THE ARCHITECT/OWNER AND NO PART THEREOF SHALL BE COPIED OR DISCLOSED TO OTHERS OR USED IN CONNECTION WITH ANY WORK OR PROJECT OTHER THAN THE SPECIFIC PROJECT FOR WHICH THESE DOCUMENTS HAVE BEEN PREPARED AND DEVELOPED WITHOUT THE WRITTEN CONSENT OF JTS MODULAR INC. VISUAL CONTACT WITH THESE DRAWINGS CONSTITUTES CONCLUSIVE EVIDENCE OF ACCEPTANCE OF THESE RESTRICTIONS.

WRITTEN DIMENSIONS ON THESE DRAWINGS SHALL HAVE PRECEDENCE OVER SCALED DIMENSIONS. CONTRACTOR SHALL VERIFY AND BE RESPONSIBLE FOR ALL DIMENSIONS AND CONDITIONS ON THE JOB AND JTS MODULAR INC. MUST BE NOTIFIED OF ANY VARIATIONS FROM THE DIMENSIONS AND CONDITIONS SHOWN BY THESE DRAWINGS.

MISPLACEMENT, ADDITION, OR OMISSION OF ANY WORD, LETTER, FIGURE, PUNCTUATION MARK, ETC., SHALL IN NO WAY CHANGE OR ALTER THE TRUE INTENT, SPIRIT, OR MEANING OF THE DRAWINGS.

THE CONTRACTOR SHALL STUDY AND COMPARE ALL DRAWING SHEETS AND SHALL REPORT ANY ERRORS, OMISSIONS, OR INCONSISTENCIES TO JTS MODULAR INC. BEFORE COMMENCING WORK IN THAT AREA.

IF CONFLICTS BETWEEN VARIOUS ELEMENTS (ARCHITECTURAL, STRUCTURAL, MECHANICAL, PLUMBING, ELECTRICAL) OF THE WORK OF THE DRAWINGS ARE DISCOVERED, THEY SHALL BE BROUGHT TO THE ATTENTION OF JTS MODULAR INC. IN ACCORDANCE WITH THE CONDITIONS OF THE CONTRACT.

EXISTING DIMENSIONS INDICATED ON THESE DRAWINGS HAVE BEEN PROVIDED FROM INFORMATION OBTAINED FROM THE DISTRICT. THE CONTRACTOR SHALL USE WHAT MEANS NECESSARY TO VERIFY THE DIMENSIONS IN THE AREAS OF DESIGNATED WORK. THE CONTRACTOR SHALL REPORT ANY DISCREPANCIES TO THE ARCHITECT PRIOR TO STARTING WORK IN THE AREA OF QUESTION.

ALL WORK SHALL CONFORM TO TITLE 24, 2013 CALIFORNIA CODE OF REGULATIONS (C.C.R.)

CHANGES TO THE APPROVED DRAWINGS AND SPECIFICATIONS SHALL BE MADE BY AN ADDENDUM OR A CCD APPROVED BY THE DIVISION OF THE STATE ARCHITECT AS REQUIRED BY SECTION 4-338, PART 1, TITLE 24, CCR.

A PROJECT INSPECTOR EMPLOYED BY THE DISTRICT (OWNER) AND APPROVED BY THE DIVISION OF THE STATE ARCHITECT SHALL PROVIDE CONTINUOUS INSPECTION OF THE WORK. THE DUTIES OF THE INSPECTOR ARE DEFINED IN SECTION 4-342, PART 1, TITLE 24, CCR.

ARCHITECT OF RECORD TO VERIFY WITH LOCAL AUTHORITY THAT FOUNDATION DEPTH IS BELOW FROST LINE WHEN BUILDING IS LOCATED IN SNOW CONDITION.

APPLICABLE CODES

TITLE 19 CCR, PUBLIC SAFETY, STATE FIRE MARSHALL REGULATIONS
TITLE 24 CCR, PART 1 – 2013 BUILDING STANDARDS AMINISTRATIVE CODE EFFECTIVE JULY 1/2014
TITLE 21, CCR, PART 2 – 2013 CALIFORNIA BUILDING CODE, VOL. 1 & 2 (CBC)(2009 IBC, AS AMENDED BY CA)
TITLE 24 CCR, PART 3 – 2013 CALIFORNIA ELECTRICAL CODE (CEC)(2011 NEC, AS AMENDED BY CA)ed
TITLE 24 CCR, PART 4 – 2013 CALIFORNIA MECHANICAL CODE (CMC) (2012 IAPMO UMC, AS AMENDED BY CA)
TITLE 24 CCR, PART 5 – 2013 CALIFORNIA PLUMBING CODE (CPC)(2012 IAPMO UPC, AS AMENDED BY CA)
TITLE 24 CCR, PART 6 – 2013 CALIFORNIA ENEGY CODE EFFECTIVE JULY 1/2014
TITLE 24 CCR, PART 9 – 2013 CALIFORNIA FIRE CODE (CFC)(2012 IFC, AS AMENDED BY CA)
TITLE 24 CCR, PART 11 – 2013 CALIFORNIA GREEN BUILDING STDS CODE EFFECTIVE JULY 1/2014
TITLE 24 CCR, PART 12 – 2013 CALIFORNIA REFERENCED STANDARDS (PARTIALS LIST – SEE CBC CH. 35 AND CFC CH. 45
2013 NFPA 13, INSTALLATION OF SPRINKER SYSTEMS (CA AMENDED)
2013 NFPA 14, INSTALLATION OF STANDPIPE AND HOSE SYSTEMS
2013 NFPA 17, DRY CHEMICAL EXTINGUISHING SYSTEMS
2013 NFPA 17A, WET CHEMICAL EXTINGUISHING SYSTEMS
2013 NFPA 20, INSTALLATION OF STATIONARY PUMPS FOR FIRE PROTECTION
2013 NFPA 22, WATER TANKS FOR PRIVATE FIRE PROTECTION
2013 NFPA 24, INSTALLATION OF PRIVATE FIRE SERVICE MAINS
2013 NFPA 72, NATIONAL FIRE ALARM CODE (CA AMENDED); SEE UL STD 1971 FOR "VISUAL DEVICES"
2013 NFPA 80, FIRE DOOR AND OTHER OPENING PROTECTIVES
2013 NFPA 2001, CLEAN AGENT FIRE EXTINGUISHING SYSTEMS
2013 UL 300, CLASS I HOOD FIRE SUPPRESION SYSTEMS
2013 UL 464, AUDIBLE SIGNAL APPLIACES
2013 UL 521, HEAT DETECTORS FOR FIRE PROTECTIVE SIGNALIING SYSTEMS
2013 ICC 300, BLEACHERS, FOLDING AND TELESCOPIC SEATING, AND GRANDSTANDS (ICC/ANSI 300-2002)

STATEMENT OF GENERAL CONFORMANCE

FOR ARCHITECTS/ENGINEERS WHO UTILIZE PLANS, INCLUDING BUT NOT LIMITED TO SHOP DRAWINGS, PREPARED BY OTHER LICENSED DESIGN PROFESSIONALS AND/OR CONSULTANTS

(APPLICATION NO. _____ FILE NO. _____)

☒ THE DRAWINGS OR SHEETS LISTED ON THE COVER OR INDEX SHEET
☐ THIS DRAWING, PAGE OF SPECIFICATIONS/CALCULATIONS

HAVE BEEN PREPARED BY OTHER DESIGN PROFESSIONALS OR CONSULTANTS WHO ARE LICENSED AND/OR AUTHORIZED TO PREPARE SUCH DRAWINGS IN THIS STATE. IT HAS BEEN EXAMINED BY ME FOR:

1)DESIGN INTENT AND APPEARS TO MEET THE APPROPRIATE REQUIREMENTS OF TITLE 24, CALIFORNIA CODE OF REGULATIONS AND THE PROJECT SPECIFICATIONS PREPARED BY ME, AND
2) COORDINATION WITH MY PLANS AND SPECIFICATIONS AND IS ACCEPTABLE FOR INCORPORATION INTO THE CONSTRUCTION OF THIS PROJECT.

THE STATEMENT OF GENERAL CONFORMANCE "SHALL NOT BE CONSTRUED AS RELIEVING ME OF MY RIGHTS, DUTIES, AND RESPONSIBILITIES UNDER SECTIONS 17302 AND 81138 OF THE EDUCATION CODE AND SECTIONS 4-336, 4-341 AND 4-344" OF TITLE 24, PART 1. (TITLE 24,PART 1, SECTION 4-317(B))

I CERTIFY THAT: ☒ ALL DRAWINGS OR SHEETS LISTED ON THE COVER OR INDEX SHEET
☒ THIS DRAWING OR PAGE

☒ IS/ARE IN GENERAL CONFORMANCE AND ☒ HAVE BEEN COORDINATED	☒ IS/ARE IN GENERAL CONFORMANCE AND ☒ HAVE BEEN COORDINATED
SIGNATURE	SIGNATURE
DATE 07/13/18	DATE
ARCHITECT OR ENGINEER DESIGNATED TO BE IN RESPONSIBLE CHARGE	ARCHITECT / ENGINEER DELEGATED TO RESPONSIBILITY GENERAL FOR THIS PORTION OF THE WORK.
PRINT NAME RYAN OMER	PRINT NAME
LICENSE NUMBER: 4437 EXPIRATION DATE: 12/31/2018	LICENSE NUMBER EXPIRATION DATE

FIRE SPRINKLERS

NOTE:

THIS PC INCLUDES A FIRE SPRINKLER SYSTEM. THE MINIMUM "FIRE FLOW" IS LISTED BELOW, AND MUST BE AVAILABLE AT THE SITE AND DOCUMENTED BY A WATER FLOW TEST. THE WATER FLOW TEST MUST BE CONDUCTED OR WITNESSED BY THE LOCAL AUTHORITY, WATER PURVEYOR OR A DSA APPROVED THIRD PARTY.

THE TEST MUST BE NO OLDER THAN SIX (6) MONTHS AT THE TIME OF PLAN SUBMITTAL. SITES THAT DO NOT MEET THE MINIMUM REQUIREMENTS MAY REQUIRE ADDITIONAL MEASURES TO BE TAKEN TO PROVIDE THE MINIMUMS THAT INCLUDE BUT ARE NOT LIMITED TO:
WATER TANKS, FIRE PUMPS, ADDITIONAL WELLS, ETC. IN ORDER FOR THIS PC TO BE UTILIZED.

HYDRAULIC CALCULATIONS FROM THE TEST HYDRANT TO THE BASE OF THE RISER MUST BE PROVIDED AT EACH SUBMITTAL FOR EACH BUILDING.

MINIMUM WATER FLOW REQUIRED AT THE BASE OF THE RISER:

STATIC PSI: 97 RESIDUAL PSI: 80

GPM: 1,000 gpm

PC STAMP

FILE: PC - JTS

IDENTIFICATION STAMP
DIVISION OF THE STATE ARCHITECT
PRE CHECK (PC) DOCUMENT
CODE 2013 CBC
A SEPARATE PROJECT APPLICATION FOR CONSTRUCTION IS REQUIRED

SHEET INDEX

SOG-32: (02-113899)

T-1.00-R	TITLE SHEET
T-1.01	(02-113899) TEST INSPECTIONS AND GUIDELINES
ARCHITECTURAL	
A-1.01-R	FLOOR PLAN
A-1.01	(02-113899) FLOOR PLANS
A-1.10	(02-113899) CEILING DETAILS
A-1.11-R	REFLECTED CEILING PLAN
A-1.11	(02-113899) REFLECTED CEILING PLANS
A-1.21	(02-113899) DOOR & WINDOW SCHED., GENERAL NOTES & DETAILS
A-2.00-R	INTERIOR ELEVATIONS
A-2.00	(02-113899) INTERIOR ELEVATIONS
A-2.20	(02-113899) ACCESSIBILITY DETAILS
A-3.04-R	EXTERIOR ELEVATIONS
A-3.04	(02-113899) EXTERIOR ELEVATIONS
A-4.00-R	ROOF PLAN
A-4.00	(02-113899) ROOF PLAN
A-5.00	(02-113899) SECTIONS
A-8.00	(02-113899) DETAILS
A-9.01	(02-113899) DETAILS
A-9.02-R	DETAILS
STRUCTURAL	
S1.1	(02-113899) GENERAL NOTES
S1.2	(02-113899) GENERAL NOTES
S1.3	(02-113899) GENERAL NOTES
S1.4	(02-113899) TYPICAL DETAILS
S1.5	(02-113899) TYPICAL DETAILS
S1.6	(02-113899) TYPICAL DETAILS
S2.1-R	EMBEDMENT PLAN
S2.1	(02-113899) EMBEDMENT PLAN
S3.1-R	FOUNDATION DETAILS
S3.1	(02-113899) FOUNDATION PLAN
S4.1	(02-113899) ROOF FRAMING PLAN - SINGLE SLOPE OVERHANG
S5.1	(02-113899) FRAME ELEVATIONS & DETAILS - SINGLE SLOPE
S5.2	(02-113899) FRAME ELEVATIONS & DETAILS - SINGLE SLOPE
S5.9	(02-113899) FRAME DETAILS
S6.1	(02-113899) FOUNDATION DETAILS
S6.2	(02-113899) FOUNDATION DETAILS
S6.3-R	FOUNDATION DETAILS
S7.1	(02-113899) FRAMING DETAILS
S7.2	(02-113899) FRAMING DETAILS - ROOF OVERHANG
MECHANICAL	
M-0.01	(02-113899) MECHANICAL NOTES & SYMBOLS
M-1.03-R	MECHANICAL FLOOR PLAN
M-1.01	(02-113899) MECHANICAL PLANS
M-5.01	(02-113899) MECHANICAL DETAILS
M-5.02-R	MECHANICAL DETAILS
M-5.02	(02-113899) MECHANICAL SCHEDULE & DETAILS
ELECTRICAL	
E-0.01	(02-113899) ELECTRICAL NOTES & SYMBOLS
E-1.01	(02-113899) ELECTRICAL PLANS
E-1.02	(02-113899) ELECTRICAL PLANS
E-1.05-R	ELECTRICAL POWER PLAN
E-1.09-R	ELECTRICAL LIGHTING PLAN
E-2.01	(02-113899) ELECTRICAL PLANS
E-5.03	(02-113899) ELECTRICAL LIGHTING SCHEDULES & DTLS
E-5.04-R	ELECTRICAL DETAILS
PLUMBING	
P-0.01	(02-113899) PLUMBING NOTES & SYMBOLS
P-1.00-R	PLUMBING PLAN - S&W
P-1.01	(02-113899) PLUMBING PLANS
P-2.00-R	PLUMBING PLAN - DCW & DHW
P-5.01-R	PLUMBING DETAILS
P-5.01	(02-113899) PLUMBING SCHEDULES & DETAILS
FIRE SPRINKLERS	
FP-1	BUILDING FIRE SPRINKLER PLAN
FP-2	FIRE SPRINKLER DETAILS
FP-3	REFERENCE SITE PLAN
FP-1M	(02-113899) FIRE SPRINKLER PLANS
FP-4M	(02-113899) FIRE SPRINKLER PLANS
TITLE 24	
EC-1.01-R	ENERGY CALCS
EC-1.02-R	ENERGY CALCS

JTS MODULAR
DESIGN • BUILD • TRANSPORT• ENJOY
7001 MC Divit DRIVE
BAKERSFIELD, CA 93313
WWW.JTSMODULAR.COM
OFFICE: (661) 835-9270

STRUCTURAL ENGINEER OF RECORD
ORION
Structural Engineering, Inc.
12257 OLD POMERADO ROAD, SUITE A
POWAY, CA 92064
PHONE (858) 679-1974
FAX (858) 679 1975

REGISTERED PROFESSIONAL ENGINEER
RYAN J. OMER
No. S 4437
EXP. 12/31/18
STRUCTURAL
STATE OF CALIFORNIA

NEW CLASSROOM BUILDING
MONSON - SULTANA ELEMENTARY SCHOOL
10643 AVENUE 416, DINUBA, CA 93618
MONSON - SULTANA JOINT UNION ELEMENTARY SCHOOL DISTRICT

IDENTIFICATION STAMP
DIVISION OF THE STATE ARCHITECT
CODE 2013 CBC

IDENTIFICATION STAMP
DIV. OF THE STATE ARCHITECT
02 117009
AC FLS SS
DATE 7/23/18

JTS JOB#: 06-0246
DATE: 7/16/2018

TITLE PAGE

T-1.00-R

NOTE: THIS SHEET REVISED T-1.00 OF (PC-02-113899)

MODULAR STEEL FRAME SHEARWALL TEST & INSPECTION GUIDELINE

(X INDICATES TEST OR INSPECTION TO BE DONE, --- INDICATES NOT APPLICABLE)

THE EXAMPLE FORM DSA-103'S SHOWN ON THIS SHEET ARE FOR ILLUSTRATION PURPOSES ONLY TO ASSIST IN THE COMPLETION OF FUTURE PROJECTS - SPECIFIC FORM DSA-103'S . A FORM DDSA-103 IS TO BE COMPLETED FOR EACH APPLICATION THAT THIS PC IS BEING INCORPORATED INTO AND ALL EXAMPLE FORM DSA-103'S ARE TO BE CROSSED OUT ON THIS DRAWING

MATERIAL TYPE		DSA-103 ITEM #	DESCRIPTION	STOCKPILE A: WOOD FLOOR ONLY	STOCKPILE B: CONCRETE FLOOR	CONSTRUCTION OF (DIAPHRAGM MATERIAL, FOUNDATION MATERIAL) C: PLYWOOD FLOOR ONLY WOOD FOUNDATION	CONSTRUCTION OF (DIAPHRAGM MATERIAL, FOUNDATION MATERIAL) D: CONCRETE SLAB ON GRADE	RELOCATION OF CERTIFIED BUILDING E	RELOCATION OF CERTIFIED BUILDING F: WOOD FOUNDATION	RELOCATION OF CERTIFIED BUILDING G: CONCRETE SLAB ON GRADE
SOILS Verify the necessity of the test and/or inspection with the requirements of the Application that this PC is part of.	GENERAL	1	* Site has been prepared properly prior to fill placement/excavation * Fnd excavations extended to proper depth and material * Materials below footing are adequate	---	---	---	X	---	---	X
	COMPACTED FILL	2a	Perform qualification testing of fill materials	---	---	---	X	---	---	X
		2b	Verify use of proper fill materials, inspect lift thickness, placement and compaction during placement of controlled fill	---	---	---	X	---	---	X
		2c	Test compaction of controlled fill	---	---	---	X	---	---	X
CONCRETE	LIGHT WEIGHT FILL OVER METAL DECK N.A.	7a	Verify use of required design mix	---	---	---	---	---	---	---
		7c	Perform slump (and where required) air content test; determine temperature of concrete	---	---	---	---	---	---	---
		7d	Test concrete - compression test	---	---	---	---	---	---	---
		7e	Inspect batching of concrete	---	---	---	---	---	---	---
		7f	Inspect placement of concrete, reinforcing and embedded items over steel deck - by RBIP	---	---	---	---	---	---	---
		12	Waiver of Batch Plant Inspection	---	---	---	---	---	---	---
	FOUNDATION	7a	Verify use of required design mix	---	---	---	X	---	---	X
		7b	Test Reinforcing Steel - See NOTE 1 for Waiver for one story buildings	---	---	---	X	---	---	X
		7c	Perform slump (and where required) air content test; determine temperature of concrete	---	---	---	X	---	---	X
		7d	Test concrete - compression test	---	---	---	X	---	---	X
		7e	Inspect batching of concrete	---	---	---	X	---	---	X
		7g	Inspect placement of formwork,concrete, reinforcing steel and embedded items - by project inspector	---	---	---	X	---	---	X
		7f	Batch Plant Inspection design complies w/ 1705.3 item 2.	---	---	---	X	---	---	X
	POST INSTALLED ANCHORS NOTE 2	11a	Inspect installation of post - installed anchors	---	---	---	X	---	---	X
		11b	Test post - installed anchors	---	---	---	X	---	---	X

MATERIAL TYPE		DSA-103 ITEM #	DESCRIPTION	STOCKPILE A	STOCKPILE B: CONCRETE FLOOR	CONSTRUCTION OF (DIAPHRAGM MATERIAL, FOUNDATION MATERIAL) C	CONSTRUCTION OF (DIAPHRAGM MATERIAL, FOUNDATION MATERIAL) D: CONCRETE SLAB ON GRADE	RELOCATION OF CERTIFIED BUILDING E	RELOCATION OF CERTIFIED BUILDING F: WOOD FOUNDATION	RELOCATION OF CERTIFIED BUILDING G: CONCRETE SLAB ON GRADE
STRUCTURAL STEEL	MATERIAL VERIFICATION	17a	* Materials are appropriately marked * Mfr. certified mill test reports * Material sizes, types and grades comply with requirements		X	---	X	---	---	---
		17b	Sample and test all unidentified structural steel and steel decks		X	---	X	---	---	---
		17c	Examine seam welds of structural tubes and pipes		---	---	---	---	---	---
		17d	Verify member locations, bracing and all details constructed in the field		X	---	X	---	---	---
		17e	Verify stiffener locations, connection tab locations and all construction details fabricated in the shop		X	---	X	---	---	---
	VERIFICATION OF MATERIALS, EQUIPMENT, WELDERS, ETC.	19a	Verify weld filler material identification marking per AWS designation listed on the DSA approved documents and the WPS		X	---	X	---	---	---
		19b	Verify weld filler material manufacturers certificate of compliance		X	---	X	---	---	---
		19c	Verify WPS welder qualifications and equipment		X	---	X	---	---	---
	SHOP WELDING	19.1a	Inspect groove. multipass, and field welds > 5/16"		X	---	X	---	---	---
		19.1b	Inspect single pass fillet welds ≤ 5/16"		X	---	X	---	---	---
		19.1c	Inspect welding of stairs and railing systems NOTE 3		X	---	X	---	---	---
	FIELD WELDING SEE NOTE 3	19.2a	Inspect groove. multipass, and field welds > 5/16"	---	---	---	X	---	---	X
		19.2b	Inspect single pass fillet welds < 5/16"	---	---	---	X	---	---	X
		19.2f	Inspect welding of stairs and railing systems	---	---	---	---	---	---	---
	OTHER	24a	Shop Welding - Inspect welding of cold formed steel Periodic/Special Inspector	---	X	---	X	---	---	---
		24b	Shop Welding - Inspect welding of steel floor deck welds Periodic/Special Inspector	---	---	---	---	---	---	---
OTHER - SHOT PINS (Two Story Modular)		24c	Ceiling wire hangers (pins in metal deck with concrete fill) Test/Lab	---	X	---	---	---	---	---

	STOCKPILE	CONSTRUCTION	RELOCATION
INSPECTOR CLASS (MINIMUM REQUIREMENTS)	RBIP OR CLASS 1	IN PLANT: RBIP OR CLASS 1 SITE: CLASS 4	SITE: CLASS 4
SELECTION OF PROJECT INSPECTOR AND TEST AGENCY	BY THE OWNER AND APPROVED BY DSA A/E OF RECORD AND STRUCTURAL ENGINEER	BY THE SCHOOL DISTRICT AND APPROVED BY DSA A/E OR RECORD AND STRUCTURAL ENGINEER	
COST OF THE PROJECT INSPECTOR (CA ADMIN CODE §4-336) AND TEST AGENCY (CA ADMIN CODE 4-335	BY THE OWNER	BY THE SCHOOL DISTRICT	
COPIES OF THE REPORT TO:	DSA (ORIGINAL) I.O.R./P.I. MANUFACTURER ARCH/SE/NOTED ON DSA-1	ARCHITECT SCHOOL DISTRICT I.O.R./P.I. DSA	STRUCTURAL ENGINEER DSA (ORIGINAL) MANUFACTURER

NOTES:
1.) REINFORCING STEEL TESTS MAY BE WAIVED FOR ONE-STORY BUILDINGS, PER TITLE 24, PART 2, SECTION 1916A.2 (1916.1.5*).
2.) REQUIRED ONLY WHERE THE DETAILS OF THE PC SPECIFY THE USE OF THIS TYPE OF ANCHOR.
3.) REQUIRED ONLY WHERE THE DETAILS OF THE PC SPECIFY THIS WELDING.

*INDICATES ALTERNATIVE 2013 CBC SECTIONS THAT COMMUNITY COLLEGES MAY USE PER 2013 SECTION 1.9.2.2.

FOR REFERANCE ONLY

File 54-62
IDENTIFICATION STAMP
DIV. OF THE STATE ARCHITECT
02 117009
FLS SS
DATE 7/23/18

JTS MODULAR
DESIGN • BUILD • TRANSPORT • ENJOY

COMMERCIAL INSTITUTIONAL AND RESIDENTIAL MODULAR BUILDINGS DESIGN & PLANNING

7001 Mc Divitt Dr.
Bakersfield, CA 93313
Office: (661) 835-9270
Plant: (661) 833-2940
Fax: (661) 847-1007
www.jtsmodular.com

STRUCTURAL ENGINEER OF RECORD
ORION
Structural Engineering, Inc.
12257 OLD POMERADO ROAD, SUITE A
POWAY, CA 92064
PHONE (858) 679-1974
FAX (858) 679 1975

SOG-32
RE-LOCATABLE BUILDING PC

FILE: PC-JTS

IDENTIFICATION STAMP
DIV. OF THE STATE ARCHITECT
PRE CHECK (PC) DOCUMENT
CODE 2013 CBC
A SEPARATE PROJECT APPLICATION FOR CONSTRUCTION IS REQUIRED

APPROVALS

IDENTIFICATION STAMP
DIV. OF THE STATE ARCHITECT

FILE # PC-JTS
APPL # 02-113898
AC FLS SS SPR
DATE 3/19/15

DATE
PROJECT 05-0140

PC

REGISTERED PROFESSIONAL ENGINEER
BRIAN J. ORION
No. S 4437
EXP. 12/31/16
STRUCTURAL
STATE OF CALIFORNIA

SHEET NAME
TEST & INSPECTION GUIDELINES

SHEET NUMBER
T-1.01

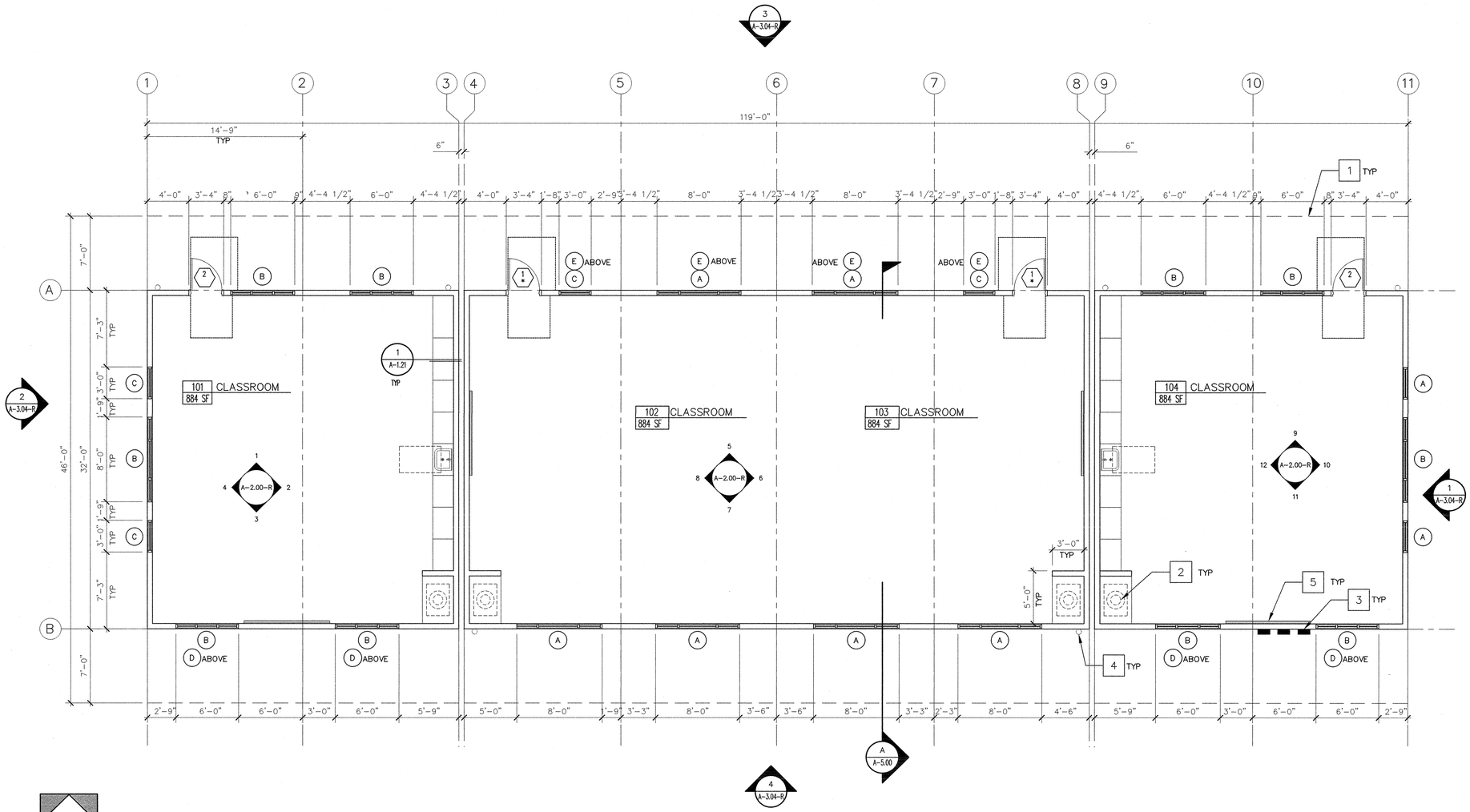

PLAN NORTH

FLOOR PLAN

SCALE: 3/16" = 1"-0"

KEYNOTES [1]

1. LINE OF ROOF OVERHANG
2. HVAC UNIT–SEE DETAIL 9/A–6.02–R AND SHEET M–1.00–R
3. ELECTRICAL PANEL–SEE ELECTRICAL DRAWINGS
4. DOWNSPOUT
5. 4'X8' MARKERBOARD – SEE DETAIL 8/A–6.02–R

LEGEND

30" x 48" — INDICATES 30"x48" CLEAR W.C. SPACE

12" MIN. — CLEAR SPACE AT DOORS, SEE SHEET A–2.20 (02–113899)
18" MIN. @ INT.
24" MIN. @ EXT.

(X) WINDOW TYPE SYMBOL – SEE SHEET A–1.21–R FOR SCHEDULE

(XXX / X) DOOR TYPE SYMBOL – SEE SHEET A–1.21–R FOR SCHEDULE
* INDICATES PANIC HARDWARE

GENERAL NOTES

NOTE: THIS SHEET REVISED A-1.01 OF (PC-02-113899)

JTS MODULAR
DESIGN • BUILD • TRANSPORT• ENJOY
7001 MC Divitt DRIVE
BAKERSFIELD, CA 93313
WWW.JTSMODULAR.COM
OFFICE: (661) 835-9270

STRUCTURAL ENGINEER OF RECORD
ORION
Structural Engineering, Inc.
12257 OLD POMERADO ROAD, SUITE A
POWAY, CA 92064
PHONE (858) 679-1974
FAX (858) 679 1975

REGISTERED PROFESSIONAL ENGINEER RYAN J. ORION No. S 4429 EXP. 12/31/18 STRUCTURAL STATE OF CALIFORNIA

NEW CLASSROOM BUILDING
MONSON - SULTANA ELEMENTARY SCHOOL
10643 AVENUE 416, DINUBA, CA 93618
MONSON - SULTANA JOINT UNION ELEMENTARY SCHOOL DISTRICT

IDENTIFICATION STAMP
DIVISION OF THE STATE ARCHITECT
CODE 2013 CBC

File 54-62
IDENTIFICATION STAMP DIV. OF THE STATE ARCHITECT
02 117009
AC FLS SS
DATE 7/23/18

JTS JOB#: 06-0246
DATE: 7/16/2018

FLOOR PLAN

A-1.01-R

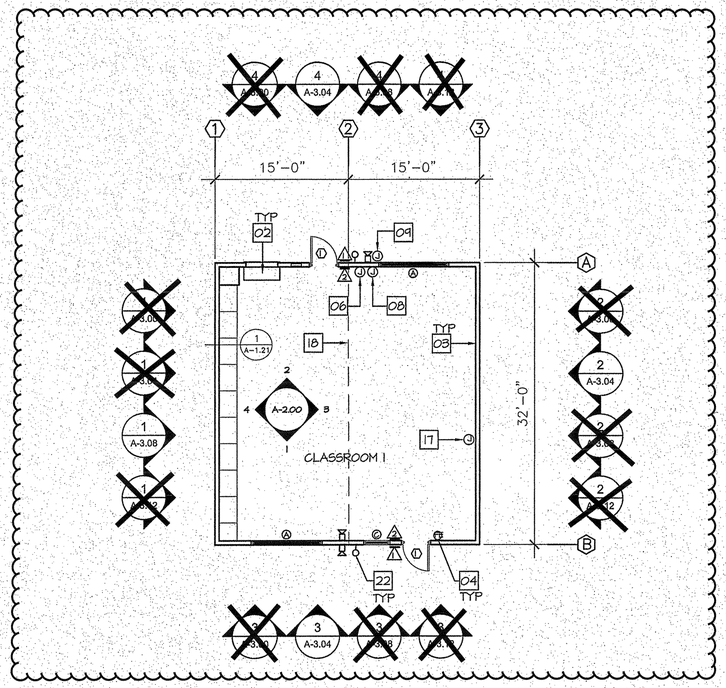

2 **SOG-32 - 2 Modules**
1/8" = 1'-0"

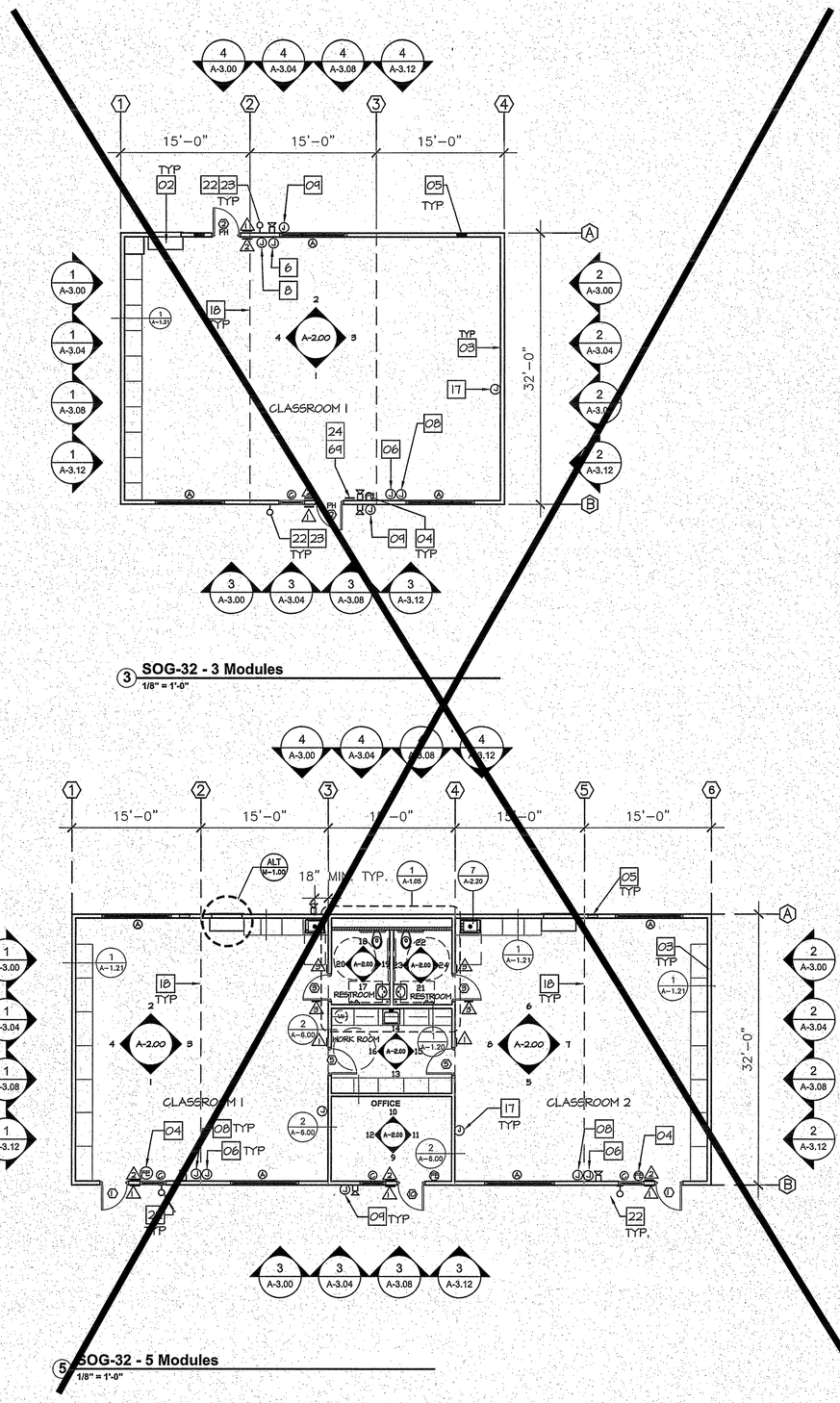

3 **SOG-32 - 3 Modules**
1/8" = 1'-0"

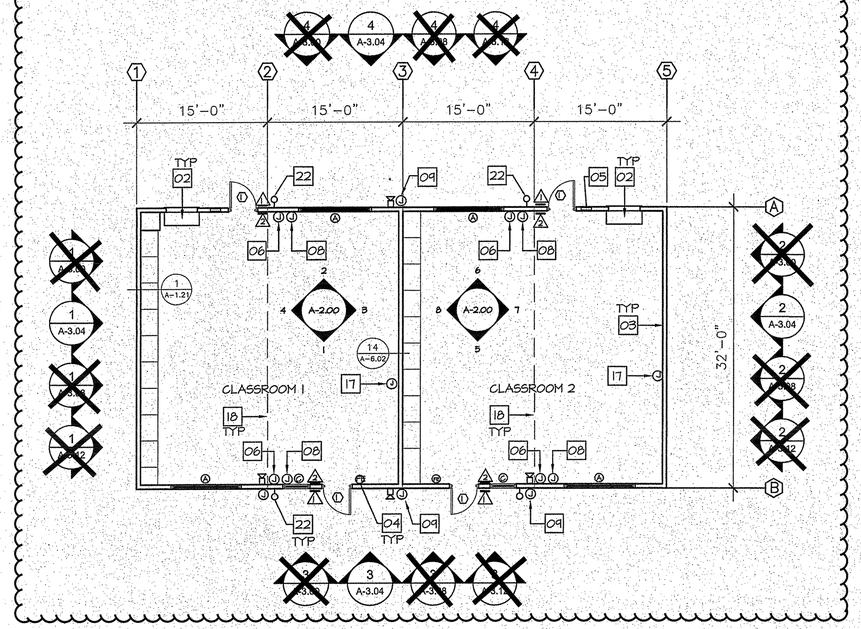

4 **SOG-32 - 4 Modules**
1/8" = 1'-0"

5 **SOG-32 - 5 Modules**
1/8" = 1'-0"

KEYNOTES

01	NOT USED
02	HVAC UNIT-SEE SHEET M-1
03	2 X 6 EXTERIOR STUD WALL
04	FIRE EXTINGUISHER - #5 DRY CHEMICAL WITH 2A-10BC UL RATING ON WALL SEMI-RECESSED-HANDLE AT +48"FF MAX 4" MAX PROJ.
05	ELECTRICAL PANEL-SEE ELECTRICAL DRAWINGS
06	JUNCTION BOX FOR FIRE ALARM PULL STATION @ TOP OF OPERATING HANDLE +42" MIN - +48" MAX FF WITH CONDUIT STUBBED TO ATTIC-SEE ELECTRICAL DRAWINGS.
07	NOT USED
08	JUNCTION BOX FOR FIRE ALARM VISUAL DEVICE @ +80"FF WITH CONDUIT STUBBED TO ATTIC-SEE ELECTRICAL DRAWINGS
09	JUNCTION BOX FOR FIRE ALARM EXTERIOR HORN @ +80"FF-SEE ELECTRICAL DRAWINGS
10	NOT USED
11	NOT USED
12	NOT USED
13	NOT USED
14	NOT USED
15	NOT USED
16	NOT USED
17	ADD JUNCTION BOX FOR WALL CLOCK @ =80" AFF WITH CONDUIT STUBBED SCHOOL OR DAYCARE PURPOSES.
18	LINE OF MODULAR BUILDING JOINT
19	NOT USED
20	NOT USED
21	NOT USED
22	ENERTRON COMPACT EXTERIOR FLUORESCENT FIXTURE OR EQUAL
23	90 MIN. EMERGENCY BATTERY BACKUP LIGHTING
24 XX	MAX OCCUPANT LOAD SIGN NUMBER INDICATES MAXIMUM OCCUPANT LOAD FOR AREA

LEGEND

A	WINDOW SYMBOL - SEE WINDOW SCHEDULE SHEET A-1.21
2	DOOR SYMBOL - SEE DOOR SCHEDULE SHEET A-1.21
1 ID+ISA, 2 EXIT, 3 RESTROOM	SEE SIGN SCHEDULE SHEET A-1.21
FE	FIRE EXTINGUISHER

GENERAL NOTES

1. REFER TO SITE DRAWINGS FOR ACCESSIBLE DOOR LANDINGS AND PATH OF TRAVEL.
2. STANDARD CLASSROOM MAY REQUIRE ADDITIONAL PROVISIONS - SEE SITE ADAPTATION DRAWINGS FOR ADDITONAL REQUIREMENTS EX: FIREWALL AND SPRINKLERS.
3. FOR VARIOUS MODULE WIDTH LAYOUTS SEE SHEET A-1.01, A-1.02, A-1.03 AND A-1.04
4. OCCUPANT LOAD SHALL BE POSTED IN A CONSPICIOUS PLACE NEAR THE MAIN EXIT. OCCUPANT LOAD SIGN SHALL BE PROVIDED BY THE SCHOOL DISTRICT U.O.N. FOR ANY AREA EXCEEDING 49 OCCUPANTS.
5. OVERHANG MAY BE USED IN VARYING WIDTHS - UP TO 7'-0" FOR BASIC CLASSROOM CONFIGURATION SEE SHEET A-1.00, A-1.11, A-1.12, A-1.13 AND A-1.14 FOR REFLECTED CEILING PLAN AND NOTES SEE SHEET A-1.10.
6. ANY SITE ADAPTATIONS SHALL BE ENCLOSED. THIS PC IS NOT APPROVED FOR SCIENCE VOCATIONAL SPECIAL HAZARDS.
7. CLASSROOM USED FOR DAYCARE SHALL SUBMITTED FOR REVIEW FOR EXITING ON SITE SPECIFIC PLANS.

File
IDENTIFICATION STAMP
DIV. OF THE STATE ARCHITECT
02 117009
AC FLS SS
DATE 7/23/15

FOR REFERANCE ONLY

JTS MODULAR
DESIGN • BUILD • TRANSPORT • ENJOY

COMMERCIAL INSTITUTIONAL AND RESIDENTIAL MODULAR BUILDINGS DESIGN & PLANNING

7001 Mc Divitt Dr.
Bakersfield, CA 93313
Office: (661) 835-9270
Plant: (661) 833-2940
Fax: (661) 847-1007
www.jtsmodular.com

STRUCTURAL ENGINEER OF RECORD
ORION
Structural Engineering, Inc.
12257 OLD POMERADO ROAD, SUITE A
POWAY, CA 92084
PHONE (858) 679-1974
FAX (858) 679 1975

SOG-32
RE-LOCATABLE
BUILDING PC

APPROVALS
IDENTIFICATION STAMP
DIV. OF THE STATE ARCHITECT
PRE CHECK (PC) DOCUMENT
CODE 2013 CBC
A SEPARATE PROJECT APPLICATION FOR CONSTRUCTION IS REQUIRED

FILE # PC-JTS
APPL # 117009
AC FLS SS
DATE 3/19/15

DATE
PROJECT XX-XXX

PC

REGISTERED PROFESSIONAL ENGINEER
BRIAN J. ORR
No. S 4437
EXP. 12/31/16
STRUCTURAL
STATE OF CALIFORNIA

SHEET NAME
FLOOR PLAN LAYOUTS 2 - 5 MODULES

SHEET NUMBER
A-1.01

IR-25-2.13

METAL SUSPENSION SYSTEMS FOR LAY IN PANEL CEILINGS

PURPOSE: The purpose of this Interpretation of Regulations (IR) is to provide guidelines for the installation of metal suspension systems for lay-in ceilings on projects approved under the 2013 California Building Code (CBC). For projects submitted to the DSA for review under the 2007 or 2010 CBC, see IR 25-2.07 or IR 25-2.10, respectively.

1. GENERAL REQUIREMENTS: CBC Section 1616A.1.20 (1616.10.16*) requires the design and installation to be in compliance with ASTM C635, C636, and E580, Section 5, as amended by 2013 CBC Section 1616A.1.20 (1616.10.16*).

Note: Amendments in CBC Section 1616A.1.20 (16161.10.16*) replace ASCE 7, Section 13.5.6.

The requirements in this IR apply to flat and level ceiling systems whose total weight, including ceiling mounted air terminals, services and light fixtures, does not exceed four (4) psf. Heavier systems, systems that are not flat and level, and those supporting lateral loads from partitions are beyond the scope of this IR and will require special design and details.

2. SUSPENSION SYSTEM COMPONENTS: Shall comply with ASTM C635 and Section 5.1 of ASTM E580.

2.1 The ceiling grid system must be rated heavy duty as defined by ASTM C635.

2.2 Ceiling wire shall be Class 1 zinc coated (galvanized) carbon steel conforming to ASTM A641. Wire shall be #12 gage (0.106" diameter) with soft temper and minimum tensile strength = 70 ksi.

2.3 Main runners, cross runners, splices, expansion devices, and intersection connectors shall be designed to carry a mean ultimate test load of not less than 180 lbs. in compression and tension per ASTM E580 Section 5.1.2.

3. SUSPENSION SYSTEM INSTALLATION: Shall comply with ASTM C636 and Section 5.2 of ASTM E580.

3.1 #12 gage hanger wires may be used for up to and including a 4 foot by 4 foot grid spacing and shall be attached to main runners.

3.2 Provide #12 gage hanger wires at the ends of all main and cross runners within eight (8) inches of the support or within one-fourth (1/4) of the length of the end tee, whichever is least, for the perimeter of the ceiling area (see Figure 2). Perimeter wires are not required when the length of the end tee is eight (8) inches or less.

3.3 Ceiling grid members shall be attached to two (2) adjacent walls per ASTM E580, Section 5.2.3. Ceiling grid members shall be at least 3/4 inch clear of other walls. If walls run diagonally to ceiling grid system runners, one end of main and cross runners should be free, and a minimum of 3/4 inch clear of wall.

3.4 The width of the perimeter supporting closure angle shall be not less than two inches. Grid systems with specialty or proprietary angles and support clips may be acceptable in accordance with Section 11 below.

3.5 At the perimeter of the ceiling area, where main or cross runners are not connected to the adjacent wall, provide interconnection between the runners at the free end to prevent lateral spreading. A metal spreader strut or a #16 gage wire with a positive mechanical connection to the runner may be used and placed within eight (8) inches of the wall. Where the perpendicular distance from the wall to the first parallel runner is eight (8) inches or less, this interlock is not required.

4. EXPANSION JOINTS, SEISMIC SEPARATION JOINTS, AND PENETRATIONS:

4.1 Expansion joints shall be provided in the ceiling at intersections of corridors and at junctions of corridors and lobbies or other similar areas (see Figure 7, Detail A).

4.2 For ceiling areas exceeding 2,500 square feet, a seismic separation joint shall be provided in accordance with Figure 7, Detail A, to divide the ceiling into areas not exceeding 2,500 square feet. Alternatively, comply with ASTM E580, Section 5.2.9.

4.3 Penetrations through the ceiling for sprinkler heads and other similar devices that are not integrally tied to the ceiling system in the lateral direction shall have a two (2) inch oversized ring, sleeve or adapter through the ceiling tile to allow free movement of one (1) inch in all horizontal directions. Alternatively, per ASTM E580, Section 5.2.8.5, a flexible sprinkler hose fitting that can accommodate one (1) inch of ceiling movement shall be permitted to be used in lieu of the oversized ring, sleeve, or adapter.

5. LATERAL FORCE BRACING: Lateral force bracing is required per this section for all ceiling areas. The spacing of the bracing assemblies must be shown on the construction documents.

Exception: Lateral force bracing may be omitted for suspended acoustical ceiling systems with a ceiling area of 144 square feet or less, when perimeter support, in accordance with Section 3.3 of this IR or with ASTM E580 Sections 5.2.2 and 5.2.3, are provided and perimeter walls are designed to carry the ceiling lateral forces.

5.1 Provide lateral force bracing assemblies consisting of a compression strut and four (4) #12 gage splayed bracing wires oriented 90 degrees from each other (see Figure 1).

5.2 Lateral force bracing assemblies shall be spaced per Table 1 for all values of the component importance factor (I_p) of the ceiling.

LATERAL FORCE BRACE ASSEMBLY SPACING

Design Spectral Acceleration Parameter S_{DS}	Brace Assembly Spacing
Less than or equal to 1.15	12'x12' Full building Height
Greater than 1.15 and less than or equal to 1.73	8'x12' for z/h greater than 0.5 12'x12' for z/h less than or equal to 0.5
Greater than 1.73	8'x8' for z/h greater than 0.5 8'x12' for z/h less than or equal to 0.5

Where, as defined in ASCE 7-10, Section 13.3.1:

z = height in structure of point of attachment of ceiling with respect to the base.

h = average roof height of the structure with respect to the base.

Where different brace spacing is specified at various stories, the respective ceiling plan shall clearly indicate the brace spacing.

There shall be a brace assembly a distance of not more than one half of the above spacing from each surrounding wall, expansion joint and at the edges of any ceiling vertical offset. For example, where the brace spacing is 8'x12', the distance shall be 4 feet in the direction of the 8 foot spacing and 6 feet in the direction of the 12 foot spacing.

5.3 The slope of bracing wires shall not exceed 45 degrees from the plane of the ceiling and wires shall be taut. Splices in wires are not permitted without DSA approval.

5.4 Compression struts shall be adequate to resist the vertical component induced by the bracing wires, and shall not be more than one (horizontal) in six (vertical) out of plumb.

6. ATTACHMENT OF HANGER AND BRACING WIRES:

6.1 Fasten hanger wires with not less than three (3) tight turns in three (3) inches. Hanger wire loops shall be tightly wrapped and sharply bent to prevent any vertical movement or rotation of the member within the loops (see ASTM E580, Section 5.2.7.2).

6.2 Fasten bracing wires with four (4) tight turns. Make all tight turns within a distance of one and one-half (1-1/2) inches.

6.3 Hanger or bracing wire anchored to the structure should be installed in such a manner that the direction of the anchor aligns as closely as possible with the direction of the wire.

6.4 Separate all ceiling hanger and bracing wires at least six (6) inches from all unbraced ducts, pipes, conduit, etc.

6.5 Hanger wires shall not attach to or bend around interfering material or equipment. Provide trapeze or other supplementary support members at obstructions to typical hanger spacing (see Figure 3A, Detail F). Provide additional hangers, struts or braces as required at all ceiling breaks, soffits, or discontinuous areas.

6.6 Hanger wires that are more than one (horizontal) in six (vertical) out of plumb shall have counter-sloping wires. Perimeter hanger wires at main runners that are positively attached to the perimeter closure angle, counter-sloping is optional.

Note: See ASTM C636, Figure 1, for counter-sloping methods.

6.7 When connection details differ from those in the attached figures, attachment of bracing wires to the structure above and to the main runners shall be adequate for the load imposed. The weight (W_p) shall be taken as not less than four (4) psf for calculating seismic forces (F_p).

6.8 When drilled-in concrete anchors or power actuated fasteners are used in reinforced concrete for hanger wires, 1 out of 10 wire/anchor assemblies must be field tested for 200 lbs. in tension. When drilled-in concrete anchors are used for bracing wires, 1 out of 2 wire/anchor assemblies must be field tested for 440 lbs. in tension in the direction of the wire. Power actuated fasteners in concrete are not permitted for bracing wires.

Note: Drilled-in anchors or power actuated fasteners require DSA approval prior to use in prestressed concrete.

7. CEILING FIXTURES, TERMINALS, AND DEVICES: All fixtures, terminals, and other devices shall be mounted in a manner that will not compromise ceiling performance in accordance with Section 13.5.6.2.2(5) of ASCE 7-10 as amended by 2013 CBC Section 1616A.1.20 (1616.10.16*) and ASTM E580 Sections 5.3 and 5.4.

7.1 Ceiling panels shall not support any light fixtures, air terminals or devices.

7.2 Light Fixtures:

7.2.1 All light fixtures shall be positively attached to the ceiling suspension systems by mechanical means to resist a horizontal force equal to the weight of the fixture. Screws or approved fasteners are required. A minimum of two attachments are required at each light fixture, per ASTM E580, Section 5.3.1.

7.2.2 Light fixtures weighing less than or equal to 10 lb. shall have a minimum of one (1) #12 gage slack safety wire connected from the fixture housing to the structure above.

7.2.3 Light fixtures weighing greater than 10 lb. but less than or equal to 56 lbs. may be supported directly on the ceiling runners, but they shall have a minimum of two (2) #12 gage slack safety wires connected from the fixture housing at diagonal corners and anchored to the structure above.

7.2.4 Light fixtures weighing greater than 56 lb. shall be independently supported by not less than four (4) taut #12 gage wires attached to the housing and to the structure above. The four (4) taut #12 gage wires, including their attachment to the structure above, must be capable of supporting four (4) times the weight of the unit.

7.2.5 All four foot x four foot light fixtures must have slack safety wires at each corner unless supported per Section 7.2.4.

7.2.6 Surface-mounted fixtures shall be attached to the main runner with at least two positive clamping devices made of material with a minimum #14 gage. Rotational spring catches do not comply. A #12 gage suspension wire shall be attached to each clamping device to the structure above. Provide additional supports when light fixtures are eight (8) feet or longer. Maximum spacing between supports shall not exceed eight (8) feet.

7.2.7 Support pendant-mounted light fixtures directly from the structure above with hanger wires or cables passing through each pendant hanger and capable of supporting two (2) times the weight of the fixture. See IR 16-9 for additional requirements for pendent mounted fixtures.

If the pendant mounted light fixture is directly and independently braced below the ceiling, i.e., aircraft cables to walls, then a brace assembly is not required above the ceiling.

If the pendant mounted light fixture is not directly and independently braced below the ceiling, then a bracing assembly, per Figure 1, is required where the pendant hanger penetrates the ceiling. Special details are required to attach the pendant hanger to the bracing assembly to transmit the horizontal force. Exception: Where the weight of the fixture is less than 20 pounds, the compression post shown in Figure 1 is not required.

7.2.8 Rigid conduit shall not be used for attachment of the fixtures.

7.3 Services within the Ceiling:

7.3.1 All flexible sprinkler hose fittings, ceiling-mounted air terminals or other services shall be positively attached to the ceiling suspension systems by mechanical means to resist a horizontal force equal to the weight of the component. Screws or approved fasteners are required. A minimum of two attachments are required at each component.

7.3.2 Flexible sprinkler hose fittings, ceiling-mounted air terminals or other services weighing less than or equal to 20 lb. shall have one (1) #12 gage slack safety wire attached to the terminal or service to the structure above.

7.3.3 Flexible sprinkler hose fittings, ceiling-mounted air terminals or other services weighing more than 20 lb. but less than or equal to 56 lb. shall have two (2) #12 gage slack safety wires attached to the terminal or service to the structure above.

7.3.4 Flexible sprinkler hose fittings, ceiling-mounted air terminals or other services weighing more than 56 lb. shall be supported directly from the structure above by not less than four (4) taut #12 gage wires attached to the terminal or service and to the structure above. The four (4) taut #12 gage wires, including their attachment to the structure above, must be capable of supporting four (4) times the weight of the unit.

7.4 Other Devices within the Ceiling:

7.4.1 All lightweight miscellaneous devices, such as strobe lights, occupancy sensors, speakers, exit signs, etc., shall be attached to the ceiling grid per Section 7.3.1 of this IR. In addition, devices weighing more than 10 lbs. shall have a #12 gage slack safety wire anchored to the structure above per Section 7.2.2 of this IR. Devices weighing more than 20 lbs. shall be supported from the structure above per Section 7.3.4 of this IR.

8. ADDITIONAL REQUIREMENTS:

8.1 Fire Rated Ceilings:

Provide a detail and design number for rated ceiling assemblies from an authorized testing agency. The components and installation details must conform in every respect with the listed detail and number. Details shall clearly depict all components, including insulation materials, framing and attachment of the design so that the assembly can be constructed and inspected accordingly.

Pop rivets, screws, or other attachments are not acceptable unless specifically detailed on the drawings and approved by U.L. and State Fire Marshal (SFM) recognized laboratories.

8.2 Metal and Other Panels:

Metal panels and panels weighing more than one-half (1/2) psf, other than mineral fiber acoustical tile, are to be positively attached to the ceiling suspension runners.

8.3 Essential Services Buildings:

Exitways shall be installed in accordance with Section 13.5.6.2.2(1) of ASCE 7-10 as amended by 2013 CBC Section 1616A.1.20 (1616.10.16*). A main or cross runner shall be installed on all sides of each piece of tile, board or panel and each light fixture or grill (see Figure 7, Detail B). Splices or intersection of such runners shall be attached with through connectors such as pop rivets, screws, pins, plates with end tabs or other approved connectors.

8.4 Suspended Acoustical Ceilings Below Gypsum Board Ceilings:

Where gypsum board or other ceiling finishes are attached to the framing, specific details will be required for the vertical hanger wire and lateral bracing wire support connections to the framing.

9. RE-USE OF EXISTING CEILING HANGER WIRES AND BRACING WIRES:

9.1 The gage and spacing of the wires must comply with the current applicable codes.

9.2 All existing ceiling hanger wire/anchor assemblies must be tested to 200 lbs.

9.3 All existing bracing wire/anchor assemblies must be field tested to 440 lbs.

9.4 If a new wire is to be spliced to an existing wire, the following is required:

- The architect or structural engineer in general responsible charge must submit to the DSA for approval a detail and specification describing how the splice is to be made.
- All new wires, after being spliced to the existing wires, must be field tested per Sections 9.2 and 9.3 above.
- All field tests must be performed in the presence of the project inspector.

10. MODERNIZATION AND ALTERATION: The entire ceiling shall be upgraded to meet the current requirements of the CBC and this IR if any portion of the grid system is cut or altered.

Exception: The replacement of existing ceiling panels with panels of the same materials and light fixtures of the same size, locations, and weights does not require an upgrade to the ceiling grid and suspension system.

11. DSA ACCEPTANCE OF EVALUATION REPORTS: Ceiling grid systems or components, with valid evaluation reports issued by qualified evaluation agencies, in accordance with DSA IR A-5, are accepted by the DSA, provided the system or component meets the requirements of CBC Section 1616A.1.20 (1616.10.16*), ASTM C635, C636 and E580. Where a qualified evaluation report is utilized, the installation shall comply with all the requirements specified in the evaluation report, i.e. connections, member sizes, perimeter details, special clips to wall angles, etc.

In accordance with DSA IR A-5, DSA will accept OSHPD Preapproved Details (OPD) "2013 CBC Standard Suspended Ceiling Details for Acoustical Tile or Lay-in Panel Ceilings."

12. CONSTRUCTION DOCUMENTS: Drawings and specifications shall clearly identify all systems and shall define or show all supporting details, lighting fixture attachment, lateral force bracing, partition bracing, seismic separations, etc.

Where accepted proprietary devices, clips, wall angles, etc. are utilized, the details on the approved construction documents shall clearly indicated the installation details as necessary to show compliance with all evaluation report requirements.

Where differences occur between provisions of this IR and the CBC, the provisions of the CBC shall apply.

A list of acceptable grid systems must be shown on the drawings. The grid systems specified shall have valid evaluation reports in accordance with IR A-5. The following information shall be included on the drawings for each acceptable grid system specified:

Classification of ceiling grid is heavy duty.

Manufacturer's catalog number - main runner (1) (2).

Manufacturer's catalog number - cross runner (2) (3).

Manufacturer's catalog numbers of detail for runner splice (2).

Notes: (1) Main runners must be rated as heavy duty.

(2) Show manufacturer, duty classification and catalog numbers.

(3) If a cross runner supports light fixtures, air terminals, or other cross runners, it shall be considered a main runner for the purpose of structural classification.

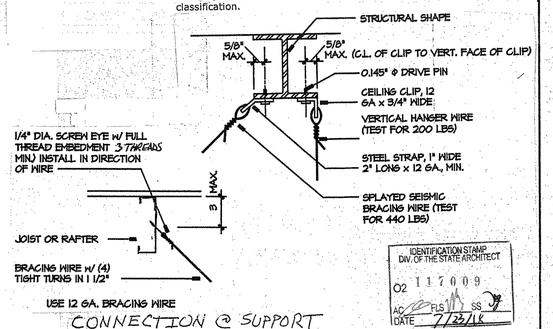

IDENTIFICATION STAMP
DIV. OF THE STATE ARCHITECT
02 117009
AC FLS SS
DATE 7/22/15

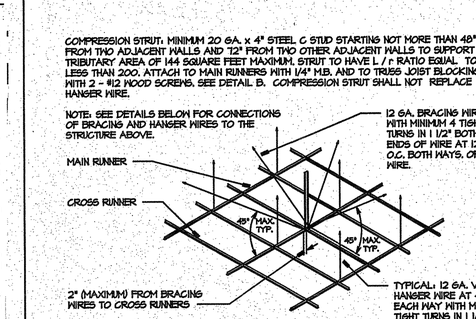

A ACOUSTICAL CEILING GRID ATTACHMENT

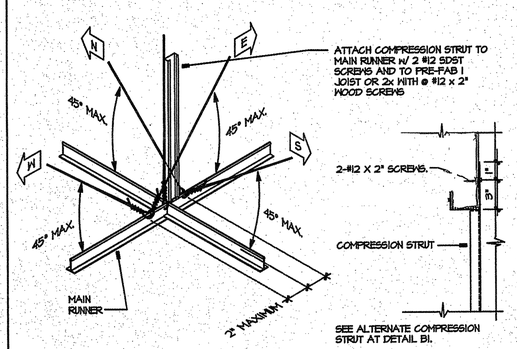

B COMPRESSION STRUT

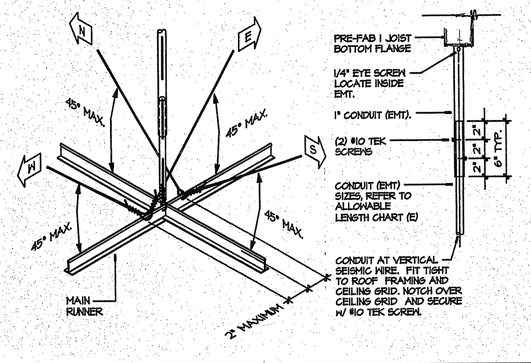

BI ALTERNATE COMPRESSION STRUT

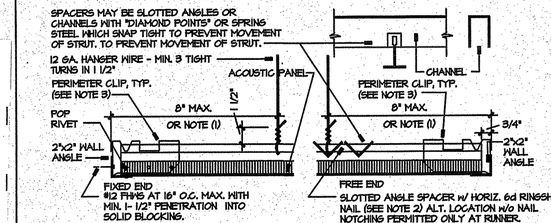

C HORIZONTAL STRUT

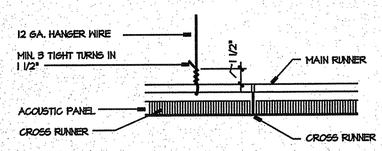

D HANGER WIRE CONNECTION TO GRID

EMT SIZE	AREA sq. in.	R in.	MAXIMUM HEIGHT in.	MAXIMUM HEIGHT ft. - in.
1/2"	0.088	.235	47	3'-11"
3/4"	0.134	.304	62	5'-2"
1"	0.148	.342	78	6'-6"
1 1/4"	0.245	.511	102	8'-6"
1 1/2"	0.342	.593	119	9'-11"
2"	0.495	.794	151	12'-7"

SINGLE STUD 2505162-33	AREA sq. in.	Rj in.	MAXIMUM HEIGHT in.	MAXIMUM HEIGHT ft. - in.
20 ga. x 2 1/2"	.223	.624	125	10'-5"

DOUBLE STUDS (back to back)	AREA sq. in.	Rj in.	MAXIMUM HEIGHT in.	MAXIMUM HEIGHT ft. - in.
20 ga. x 2 1/2"	.446	.885	177	14'-9"

E ALLOWABLE LENGTH CHART

JTS MODULAR
DESIGN • BUILD • TRANSPORT • ENJOY
COMMERCIAL INSTITUTIONAL AND RESIDENTIAL MODULAR BUILDINGS DESIGN & PLANNING
7001 Mc Divitt Dr.
Bakersfield, CA 93313
Office: (661) 835-9270
Plant: (661) 833-2940
Fax: (661) 847-1007
www.jtsmodular.com

STRUCTURAL ENGINEER OF RECORD
ORION
Structural Engineering, Inc.
12287 OLD POMERADO ROAD, SUITE A
POWAY, CA 92084
PHONE (858) 679-1974
FAX (858) 679 1975



SOG-32
RE-LOCATABLE BUILDING PC

FILE: PC-JTS

IDENTIFICATION STAMP
DIV. OF THE STATE ARCHITECT
PRE CHECK (PC) DOCUMENT
CODE 2013 CBC
A SEPARATE PROJECT APPLICATION FOR CONSTRUCTION IS REQUIRED

APPROVALS

IDENTIFICATION STAMP
DIV. OF THE STATE ARCHITECT

FILE # PC-JTS
APPL. # 02-113899
AC FLS SS
DATE 3/10/15

DATE

PROJECT 08-0140

PC

REGISTERED PROFESSIONAL ENGINEER
RYAN J. ORION
No. S 4437
EXP. 12/31/16
STRUCTURAL
STATE OF CALIFORNIA

SHEET NAME
CEILING DETAILS

SHEET NUMBER
A-1.10

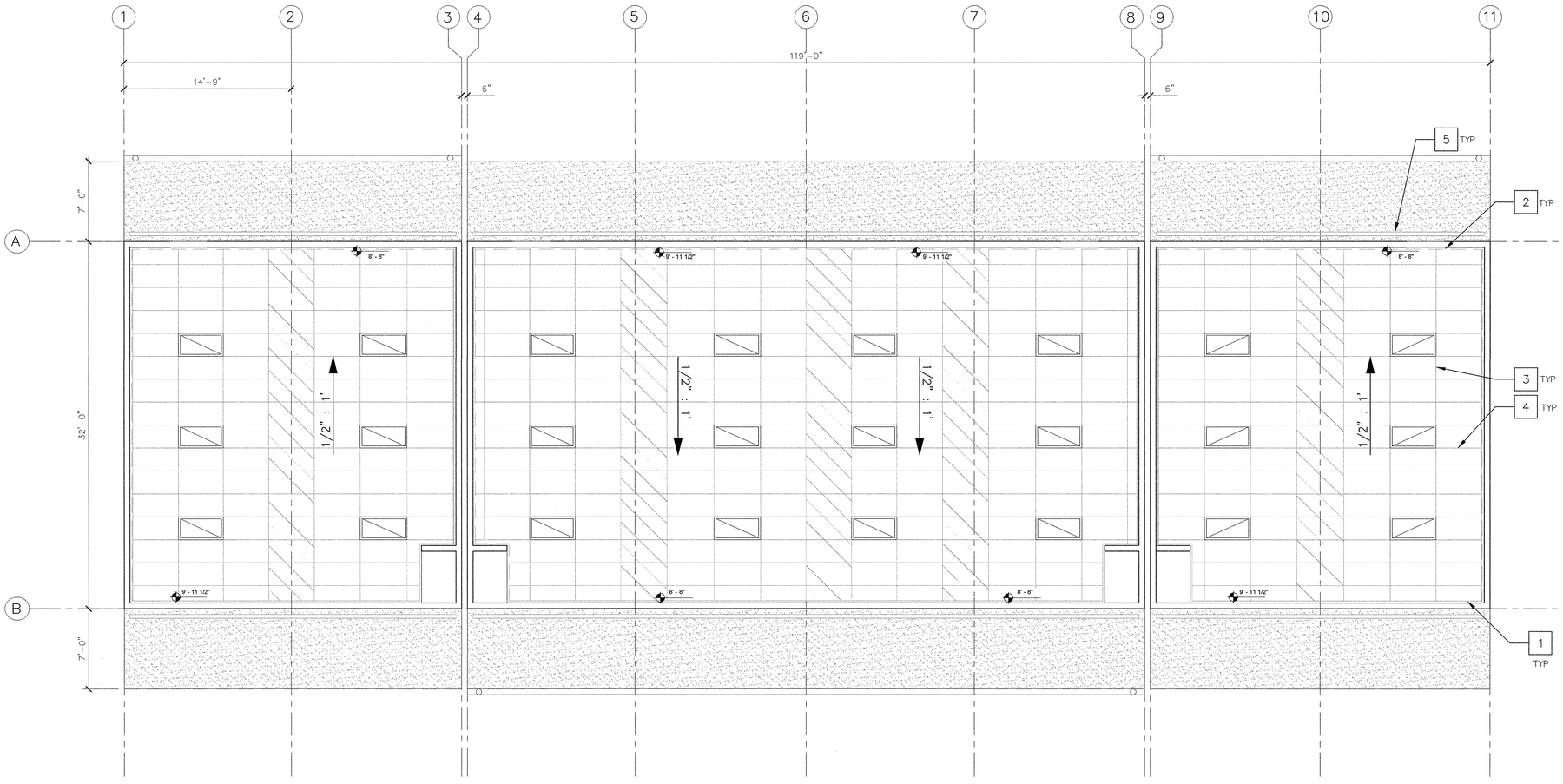

PLAN NORTH

REFLECTED CEILING PLAN

SCALE: 3/16" = 1"-0"

KEYNOTES [1]

1. SOLID LINE INDICATES FREE END CONDITION – SEE DETAIL C/A-1.10 (PC-02-113899)
2. DASHED LINE INDICATES FIXED END CONDITION – SEE DETAIL C/A-1.10 (PC-02-113899)
3. T-BAR MAIN RUNNER AT 48" O.C.
4. T-BAR CROSS TEE AT 24" O.C.
5. 2" VENT SCREEN – SEE DETAIL 6/A-6.01 (PC-02-113899)

LEGEND

SHADING INDICATES FIELD INSTALLED TILES

2'X4' ACOUSTICAL LAY-IN CEILING SYSTEM – SEE SHEET A-1.10 (02-113899) FOR CEILING DTL

ELASTORMERIC FINISH O/ 1/2" PERMABASE O/ 1/2" PLYWOOD – SEE DTL 15/A-6.00 (02-113899)

2X4' ACOUSTICAL LIGHT FIXTURE – SEE ELECTRICAL PLAN FOR FIXTURE SCHEDULE

*SEE MECHANICAL SHEETS FOR SUPPLY/RETURN/EXHAUST AIR LOCATIONS

GENERAL NOTES

NOTE: THIS SHEET REVISED A-1.11 OF (PC-02-113899)

1. INTERIOR AND EXTERIOR LIGHTING SYSTEMS AND CONTROLS SHALL BE COMPLIANT WITH THE 2013 CALIFORNIA ENERGY CODE. PROVIDE ALL COMPLIANCE FORMS AS REQUIRED BY CODE
2. ALL COLORS TO BE SELECTED BY ARCHITECT
3. CEILING SYSTEM COMPONENTS SHALL COMPLY WITH ASTM C635 AND SECTION 5.1 ASTM E580-10A
4. THE CEILING GRID SYSTEM MUST BE RATED HEAVY DUTY AS DEFINED BY ASTM C635

JTS MODULAR
DESIGN • BUILD • TRANSPORT• ENJOY
7001 MC Divitt DRIVE
BAKERSFIELD, CA 93313
WWW.JTSMODULAR.COM
OFFICE: (661) 835-9270

STRUCTURAL ENGINEER OF RECORD
ORION
Structural Engineering, Inc.
12257 OLD POMERADO ROAD, SUITE A
POWAY, CA 92064
PHONE (858) 679-1974
FAX (858) 679 1975

REGISTERED PROFESSIONAL ENGINEER
RYAN J. OKEEFE
No. S 4439
EXP. 12/31/18
STRUCTURAL
STATE OF CALIFORNIA

NEW CLASSROOM BUILDING
MONSON - SULTANA ELEMENTARY SCHOOL
10643 AVENUE 416, DINUBA, CA 93618
MONSON - SULTANA JOINT UNION ELEMENTARY SCHOOL DISTRICT

IDENTIFICATION STAMP
DIVISION OF THE STATE ARCHITECT
CODE 2013 CBC

IDENTIFICATION STAMP
DIV. OF THE STATE ARCHITECT
02 11:009
AC FLS SS
DATE 7/23/18

JTS JOB#: 06-0246
DATE: 7/16/2018

REFLECTED CEILING PLAN

A-1.11-R

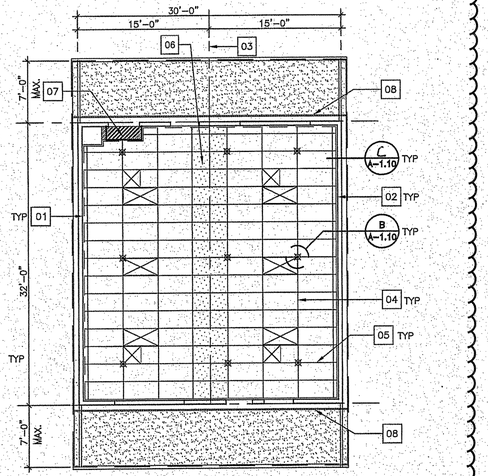

1 SOG 32 - 2 MODULES
SCALE: 1/8" = 1'-0"

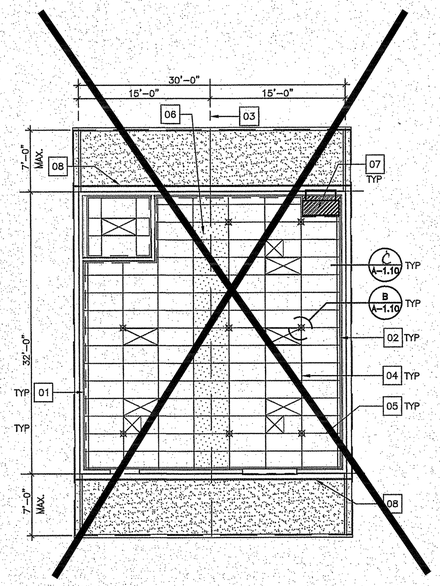

1a SOG 32 - 2 MODULES WITH RESTROOM
SCALE: 1/8" = 1'-0"

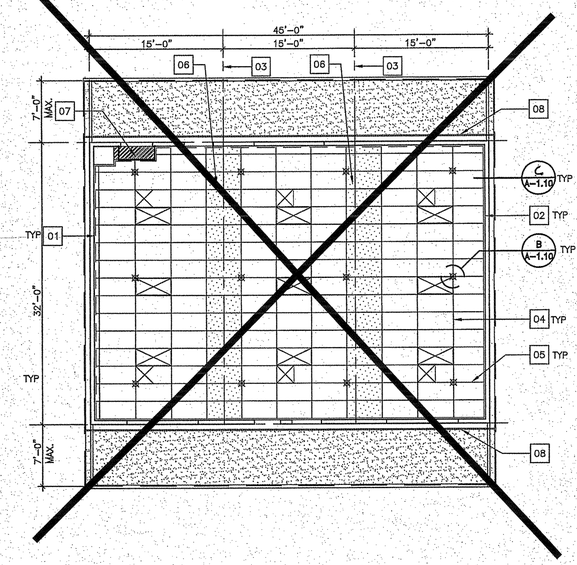

2 SOG 32 - 3 MODULES
SCALE: 1/8" = 1'-0"

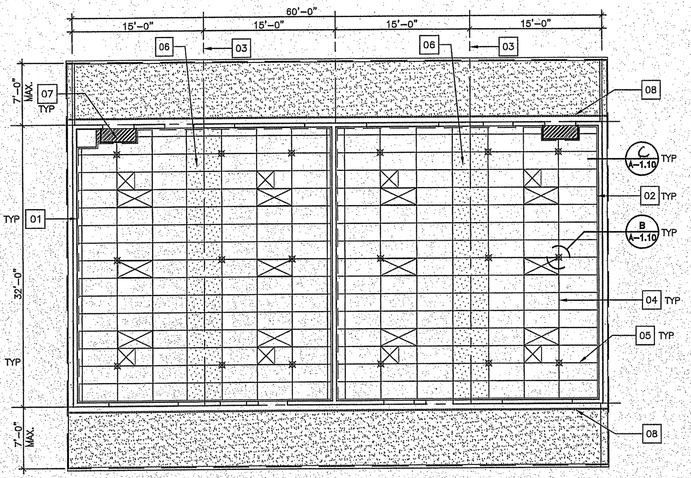

3 SOG 32 - 4 MODULES
SCALE: 1/8" = 1'-0"

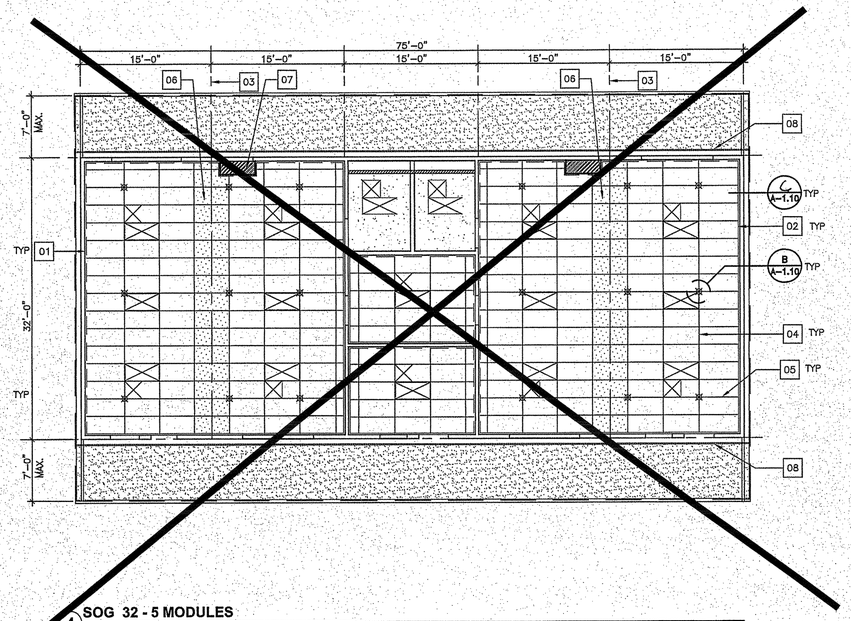

4 SOG 32 - 5 MODULES
SCALE: 1/8" = 1'-0"

NOTE: LIGHT FIXTURE LAYOUT FOR REFERENCE ONLY EXACT LOCATIONS OF LIGHT FIXTURES SEE E-1.01 & E-1.02

KEYNOTES

01 DASHED LINE INDICATES FREE END CONDITION.
02 SOLID LINE INDICATES FIXED END CONDITION.
03 MODLINE TYP.
04 MAIN-RUNNERS TYP. AT 48" O.C.
05 CROSS-RUNNERS TYP. AT 24" O.C.
06 SHADING INDICATES FIELD INSTALLED TILES.
07 SOFFIT FOR HVAC DUCT
08 2" WIDE VENTILATING SCREED - SECURE TO EACH ROOF JOIST W/#2 WOOD SCREWS - TYP.

CEILING LEGEND

SUSPENDED TEE BAR CEILING SYSTEM WITH A MINIMUM CLASSIFICATION OF HEAVY DUTY-REFER TO CEILING NOTES AND DETAILS 5 AND 6 SHEET A-1.10

CEILING TILES SHALL BE AS FOLLOWS: 2 X 4 LAY-IN PANELS PER ASTM FLAME SPREAD CLASS 1 (0-25). FLAME SPREAD SMOKE DEVELOPMENT NOT USED DENSITY LESS THAN 450 (TYPICAL).

1/2" DENS GLASS GOLD OVER 1/2" PLYWOOD

FLUORESCENT LIGHT FIXTURE'S- SEE A-1.00 AND ELECTRICAL PLANS LIGHTING AND REGISTER NOTES FOR MOUNTING AND T-BAR INSTRUCTIONS

SUPPLY AIR DIFFUSER - POSITIVELY SEE LIGHTING AND REGISTER NOTES FOR MOUNTING AND T-BAR INSTRUCTIONS

SUSPENSION WIRE - SEE A-1.10

LIGHTING/REGISTER NOTES:

FOR USE WITH HEAVY DUTY GRID:

FLUSH OR RECESSED LIGHT FIXTURES AND AIR TERMINALS, WEIGHING LESS THAN 56 LBS, MAY BE SUPPORTED DIRECTLY ON THE RUNNERS OF A HEAVY DUTY GRID SYSTEM BUT, IN ADDITION, THEY MUST HAVE A MINIMUM OF TWO (2) #12 GAU SLACK SAFETY WIRES ATTACHED TO THE FIXTURE AT DIAGONAL CORNERS AND ANCHORED TO THE STRUCTURE ABOVE. ALL 4 FT. X 4 FT. LIGHT FIXTURES MUST HAVE SLACK SAFETY WIRES AT EACH CORNER.

FOR WEIGHT 56LBS OR MORE, SEE DSA IR ON A-1.10

CEILING NOTES:

CLASSIFICATION OF CEILING GRID IS: HEAVY DUTY
ACCEPTABLE MANUFACTURERS: USG-OR-ARMSTRONG
MANUFACTURER'S CATALOG NUMBERS:

MAIN RUNNERS: HEAVY DUTY GRID
USG DX-26 FIN -OR- EQUAL

CROSS RUNNERS: HEAVY DUTY GRID
USG DX-422 FIN - OR - EQUAL
WALL ANGLE TRIM USG 5824 OR EQUAL

NOTE: SUSPENDED CEILING(S) SHALL BE INSTALLED IN FULL COMPLIANCE WITH DSA "IR 25-2.3" A COPY OF THIS DOCUMENT SHALL BE MAINTAINED AT THE MANUFACTURING FACILITY AT ALL TIMES.

GENERAL NOTES:

1. OVERHANG CAN BE VARYING LENGTHS UP TO 1'-0".
2. THIS CEILING SYSTEM IS APPROVED FOR A SYSTEM WHOSE TOTAL WEIGHT DOES NOT EXCEED 4 LBS. PSF, INCLUDING AIR CONDITIONING GRILLS AND LIGHT FIXTURES. SEPARATE ALL CEILING HANGER AND BRACING WIRES AT LEAST 6" FROM UN-BRACED DUCTS, PIPES, CONDUITS, ETC. IT IS ACCEPTABLE TO ATTACH ELECTRICAL CONDUIT NOT EXCEEDING 3/4" TO HANGER WIRE USING APPROVED CONNECTIONS.

FOR REFERANCE ONLY

IDENTIFICATION STAMP
DIV. OF THE STATE ARCHITECT
02 11/19
AC FLS SS
DATE 7/23/18

JTS MODULAR
DESIGN • BUILD • TRANSPORT • ENJOY

COMMERCIAL INSTITUTIONAL AND RESIDENTIAL MODULAR BUILDINGS DESIGN & PLANNING

7001 Mc Divitt Dr.
Bakersfield, CA 93313
Office: (661) 835-9270
Plant: (661) 833-2940
Fax: (661) 847-1007
www.jtsmodular.com

STRUCTURAL ENGINEER OF RECORD
ORION
Structural Engineering, Inc.
12257 OLD POMERADO ROAD, SUITE A
POWAY, CA 92064
PHONE (858) 679-1974
FAX (858) 679 1975

SOG-32
RE-LOCATABLE BUILDING PC

FILE: PC-JTS

IDENTIFICATION STAMP
DIV. OF THE STATE ARCHITECT
PRE CHECK (PC) DOCUMENT
CODE 2013 CBC
A SEPARATE PROJECT APPLICATION FOR CONSTRUCTION IS REQUIRED

APPROVALS

IDENTIFICATION STAMP
DIV. OF THE STATE ARCHITECT

FILE # PC-JTS
APPL. # 02-113899
AC APN FLS VR SS DSB
DATE 3/19/15

DATE
PROJECT 08-0140

PC

REGISTERED PROFESSIONAL ENGINEER
RYAN J. ORR
No. S 4437
EXP. 12/31/16
STRUCTURAL
STATE OF CALIFORNIA

SHEET NAME
2M - 5M CEILING PLANS

SHEET NUMBER
A-1.11

DOOR SCHEDULE

DOOR NUMBER	TYPE	WIDTH	HIGHT	THICKNESS	SWING	MATERIAL	ADDITIONAL INFORMATION	FRAME TYPE	HARDWARE SET	FIRE ASSEMBLY	REMARKS	
1	C	3'-0"	7'-0"	1 3/4"	90	HOLLOW METAL DOOR		HMF		NON-RTD	VISION LIGHT	1/A-6.00
2	C	3'-0"	7'-0"	1 3/4"	90	HOLLOW METAL DOOR		HMF	2	NON-RTD	VISION LIGHT	1/A-6.00
3	C	3'-0"	7'-0"	1 3/4"	90	SOLID CORE WOOD DOOR		TIMELY	1	NON-RTD	-	
4	C	3'-0"	7'-0"	1 3/4"	90	SOLID CORE WOOD DOOR		TIMELY	1	NON-RTD	-	
5	C	3'-0"	7'-0"	1 3/4"	90	SOLID CORE WOOD DOOR		TIMELY	1	NON-RTD	-	
6	C	3'-0"	7'-0"	1 3/4"	90	SOLID CORE WOOD DOOR		TIMELY	1	NON-RTD	-	
7	C	3'-0"	7'-0"	1 3/4"	90	SOLID CORE WOOD DOOR		TIMELY	1	NON-RTD	-	
8	C	3'-0"	7'-0"	1 3/4"	90	SOLID CORE WOOD DOOR		TIMELY	1	NON-RTD	-	
9	C	3'-0"	7'-0"	1 3/4"	90	SOLID CORE WOOD DOOR		TIMELY	1	NON-RTD	-	
10	C	3'-0"	7'-0"	1 3/4"	90	SOLID CORE WOOD DOOR		TIMELY	1	NON-RTD	-	

ROOM FINISH SCHEDULE

ROOM NO	ROOM TYPE	FLOOR MAT	FLOOR FIN	BASE MAT	BASE FIN	BASE HT	WAINSCOT MAT	WAINSCOT FIN	WAINSCOT HT	WALLS NORTH MAT	WALLS NORTH FIN	WALLS EAST MAT	WALLS EAST FIN	WALLS SOUTH MAT	WALLS SOUTH FIN	WALLS WEST MAT	WALLS WEST FIN	CEILING MAT	CEILING FIN	CEILING HT	REMARKS
1	CLASSROOM	SC		RTB	FF	4"	-	-	-	TB	FF	TB	FF	TB	FF	TB	FF	ACT	FF	9'-0"	
2																					
3																					
4																					
5																					
6																					
7																					

ABBREVIATIONS

- CPT - CARPET
- VCT - VINYL COMPOSITE TILE
- SV - SHEET VINYL
- RTB - RUBBER TOPSET BASE
- GB - GYPSUM BOARD
- P12B - P12C - PAINT P12D
- TB - VINYL COVERED TACK BOARD
- FRP - FIBER REINFORCED POLYESTER PANELS
- F.F. - FACTORY FINISH
- ACT - ACOUSTIC CEILING TILE
- CT - CERAMIC TILE
- QT - QUARRY TILE
- SC - SEALED CONCRETE

6 ROOM FINISH AND DOOR SCHEDULE

GENERAL

A. ALL WORK SHALL COMPLY WITH THE REQUIREMENTS OF THE TITLES 19 AND 24 CALIFORNIA CODE OF REGULATIONS (C.C.R.). NO CHANGES SHALL BE MADE FROM D.S.A. APPROVED DRAWINGS WITHOUT PRIOR WRITTEN APPROVAL OF THE D.S.A. AND THE DISTRICT ARCHITECT.

SCOPE OF WORK:

THE WORK CONSISTS OF MANUFACTURING IN A PLANT, AND INSTALLING ON-SITE, MODULAR RELOCATABLE BUILDINGS AS DEFINED HEREIN AND SHOWN AND DETAILED ON THE DRAWINGS.

A. ALL REQUIREMENTS OF TITLES 19 AND 24 OF THE STATE OF CALIFORNIA CODE OF REGULATIONS (C.C.R.) RELATED TO INSPECTIONS AND VERIFIED REPORTS SHALL BE COMPLIED WITH AND SHALL INCLUDE:
1. GENERAL RESPONSIBLE CHARGE OF FIELD ADMINISTRATION BY THE ARCHITECT OF RECORD.
2. INSPECTION IN-PLANT DURING THE COURSE OF CONSTRUCTION BY AN INSPECTOR APPROVED BY THE DIVISION OF THE STATE ARCHITECT. THE INSPECTOR SHALL BE:
RESPONSIBLE FOR AND APPROVED TO INSPECT THE GENERAL CONSTRUCTION, WELDING, MECHANICAL, AND ELECTRICAL WORK. COST OF THESE INSPECTIONS SHALL BE BORNE BY THE SCHOOL DISTRICT.
B. ON-SITE INSPECTION OF THE BUILDING ELECTRICAL AND PLUMBING AT THE TIME OF BUILDING INSTALLATION SHALL BE PERFORMED BY AN INSPECTOR APPROVED BY THE DIVISION OF THE STATE ARCHITECT AND RETAINED BY THE SCHOOL DISTRICT.
4. OTHER TESTS AND INSPECTIONS AS MAY BE REQUIRED BY THE DIVISION OF THE STATE ARCHITECT.

WORK NOT INCLUDED

A. ALL ON-SITE OR OFF-SITE UTILITIES AND THE CONNECTION TO THE BUILDING UNLESS NOTED OTHERWISE ON THE DRAWINGS
B. ALL LEVELING, GRADING, AND OTHER SITE PREPARATION, EXCEPT CONCRETE OR HOOD LEVELING STRIPS, UNLESS NOTED OTHERWISE ON THE DRAWINGS.
C. FIRE ALARM SYSTEM, FIRE EXTINGUISHER, PROGRAM BELL, CLOCK, PUBLIC ADDRESS SYSTEM, INTERCOM SYSTEM, OR SYSTEM UNLESS OTHERWISE NOTED ON THE DRAWINGS.

ACCESSIBILITY TO SITE

A. THE SCHOOL DISTRICT SHALL PROVIDE ACCESS TO THE SITE FOR THE INSTALLATION OF BUILDINGS, REMOVAL OF TREES, SHRUBS, FENCING, SPRINKLERS, ETC. NECESSARY TO THE FINALIZATION OF THE BUILDING SHALL BE THE RESPONSIBILITY OF THE SCHOOL DISTRICT.

TRANSPORTATION

A. DURING THE ORIGINAL FACTORY-TO-SITE TRANSPORTATION, OR ANY FUTURE RELOCATION TRANSPORTATION, TRANSPORTER SHALL USE MANUFACTURERS REQUIREMENTS FOR BRACING, AND SHALL USE BRACING COMPONENTS PROVIDED BY THE MANUFACTURER.

INSULATION

I. MATERIALS
A. WALLS AND FLOORS - R-19 KRAFT FACED 'certainteed' ASTM C 665, TYPE II, CLASS C, CATEGORY 1 OR EQUAL.
B. ATTIC - R-38 KRAFT FACED 'certainteed' ASTM C 665, TYPE II, CLASS C, CATEGORY 1 OR EQUAL.

WINDOWS

I. PRODUCT
A. EXPOSED ALUMINUM FRAME - BRONZE ANODIZED FINISH - DUAL GLAZED - LOW "E"

DOORS AND FRAMES

I. PRODUCTS
A. DOORS EXTERIOR:
1. 18 GAUGE HOLLOW METAL DOOR WITH SOUND INSULATION AS MANUFACTURED BY 'REPUBLIC' OR EQUAL.
B. FRAMES EXTERIOR
2. 16 GAUGE HOLLOW METAL FRAME - 3'-0" X 7'-0" - 8-1/2" FRAME WIDTH AS MANUFACTURED BY 'REPUBLIC' OR EQUAL.
C. DOORS INTERIOR:
5. LEGACY WALNUT SOLID CORE DOORS FRAMES 'TIMELY'

ROOFING

I. PRODUCT
A. 26 GAGE SEAM ROOF SYSTEM -POLYESTER RESIN COLOR COAT-24" PANEL VERTICAL SEAM AS MANUFACTURED BY WESTERN SALES DIVISION, METAL SALES MANUFACTURING CORPORATION.

VINYL COVERED TACKBOARD

I. PRODUCT
A. 1/2" FIBERBOARD WITH DECORATIVE VINYL OVERLAY - 15 oz. PSF MINIMUM DENSITY AS MANUFACTURED BY CHATFIELD-CLARK OR EQUAL.

CABINETWORK

I. PRODUCT
A. CABINETS SHALL BE CONSTRUCTED AS REQUIRED TO CONFORM TO THE REQUIREMENTS OF THE NIC DESIGN GRADE. ALL CABINETWORK SHALL HAVE LAMINATED PLASTIC FACES AND FRONTS--COUNTERTOPS SHALL BE LAMINATED PLASTIC WITH INTEGRAL 4" BACKSPLASH- CABINET INTERIORS SHALL BE STANDARD WHITE MELAMINE ON 3/4" PARTICLE BOARD OR HDF. SINK CABINETS SHALL CONFORM TO HC 125 OR 154. ALL DOOR AND DRAWER PULLS SHALL BE I-SHAPED WIRE TYPICAL.

CARPET

I. PRODUCT
A. CARPET SHALL CONFORM TO STATE OF CALIFORNIA SPECIFICATION COMPLYING WITH GROUP I, TYPE A OR TYPE B, CLASS 2 DENSITY 2000, DIRECT GLUE DOWN - MINIMUM HEIGHT = 25 oz. CARPET SHALL COMPLY WITH CBC SECTION 804.2 CARPET SHALL HAVE LEVEL LOOP, TEXTURED LOOP, LEVEL CUT OR LEVEL CUT/UNCUT PILE TEXTURE AND PILE HEIGHT OF 1/2"

RESILIENT FLOORING

I. PRODUCT
A. ASHERSTONE OR EQUAL VINYL COMPOSITION TILE - 12" X 12" X 1/8"

7 GENERAL NOTES

WINDOW SCHEDULE

SYMBOL	WIDTH	HEIGHT	TYPE	GLAZING	MATERIAL	FINISH
A	8'-0"	4'-0"	SLIDER	1/4" (MIN.) DUAL GLAZED LOW "E"	ALUMINUM	
B	6'-0"	4'-0"	SLIDER	1/4" (MIN.) DUAL GLAZED LOW "E"	ALUMINUM	
C	3'-0"	4'-0"		1/4" (MIN.) DUAL GLAZED LOW "E"	ALUMINUM	
D	6'-0"	2'-0"		1/4" (MIN.) DUAL GLAZED LOW "E"	ALUMINUM	
E	8'-0"	2'-0"		1/4" (MIN.) DUAL GLAZED LOW "E"	ALUMINUM	

*WINDOW HARDWARE 48" MAX OPERATING HEIGHT
*5LBS MAX EFFORT
*DOES NOT REQUIRE GRASPING OR PINCHING TO OPERATE

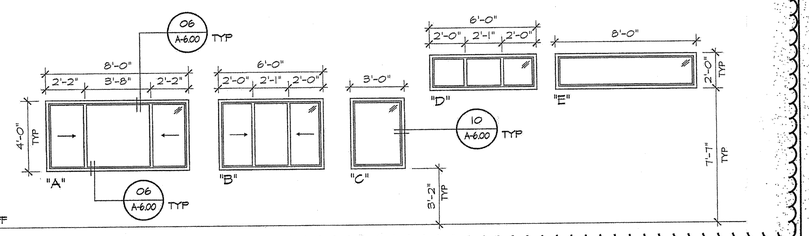

3 WINDOW TYPES & SCHEDULE

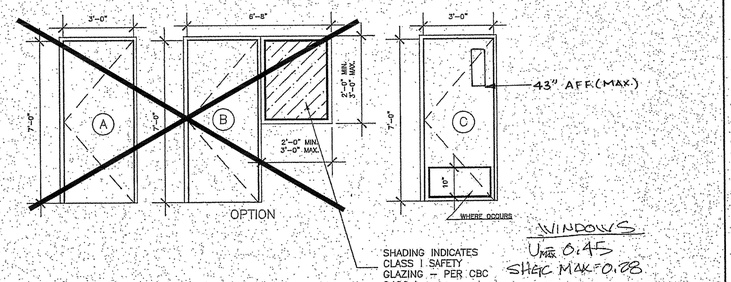

4 DOOR TYPES

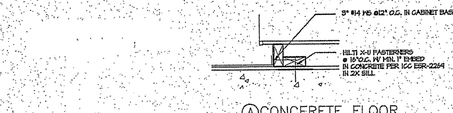

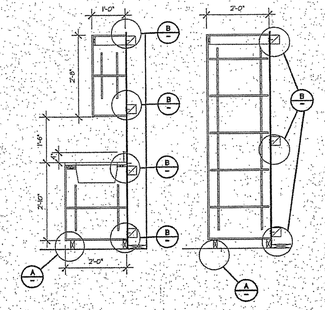

1 CABINET ATTACHMENT DETAILS

A.D.A. GRAPHICS OPTIONS

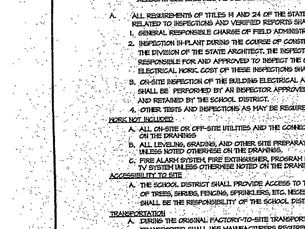

TYPE "A" SIGNS

MOUNTING LOCATION SHALL BE DETERMINED SO THAT A PERSON MAY APPROACH WITHIN 3 INCHES OF SIGNAGE WITHOUT ENCOUNTERING PROTRUDING OBJECTS OR STANDING WITHIN SWING OF A DOOR.
SIGN TYPES "A1, A2 OR A3"
SIGN TYPE "A4" OR "B" ROOM I.D.
NOTES :
1) IN ADDITION TO SIGN TYPES "A1, A2 AND A3" MOUNTED ON RESTROOM DOORS, PROVIDE SIGN TYPE "A4", LOCATED AS SHOWN
2) TYPE "B" SIGNS TO BE MOUNTED ON LATCH SIDE OF SINGLE DOOR AND RIGHT SIDE OF DOUBLE DOOR.
3) REFER TO THE DOOR SCHEDULE & ELEVATIONS FOR LOCATIONS

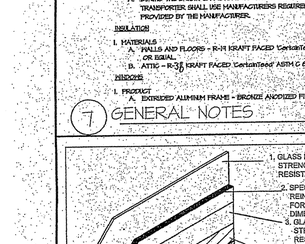

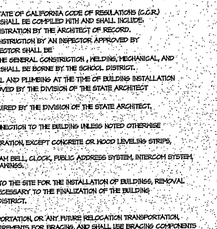

TYPE "B" SIGNS

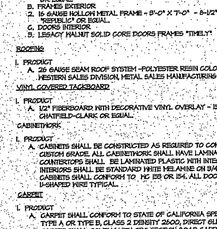

TYPE "C" SIGN

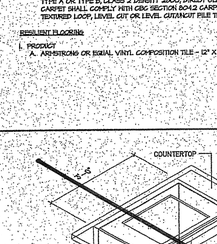

FOR TO BE RAISED BY ARIAL CHARACTERS, OR BRAILLE, AND THE BACKGROUND SHALL HAVE A NONGLARE FINISH. CHARACTERS AND SYMBOLS SHALL CONTRAST WITH THE BACKGROUND, EITHER LIGHT ON A DARK BACKGROUND OR DARK ON A LIGHT BACKGROUND

LOCATED AS SHOWN ON DRAWINGS WITH EPOXY ADHESIVE AND (3) VANDAL RESISTANT SCREWS, TYP.

INTERNATIONAL SYMBOL OF ACCESS FOR HEARING IMPAIRED

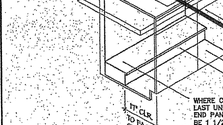
8"
8"
2"
2"
2

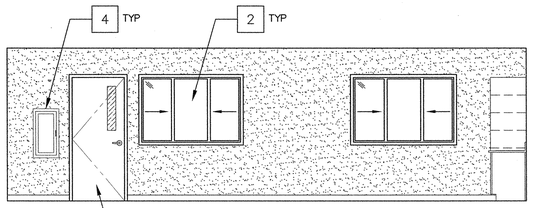

1

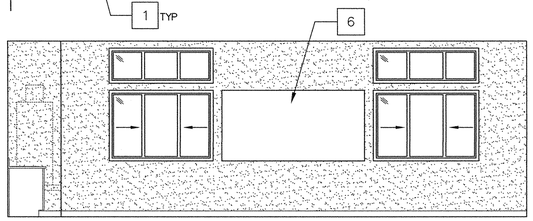

3

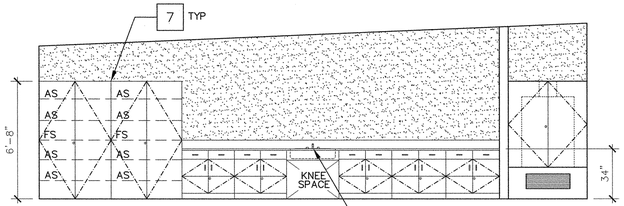

2

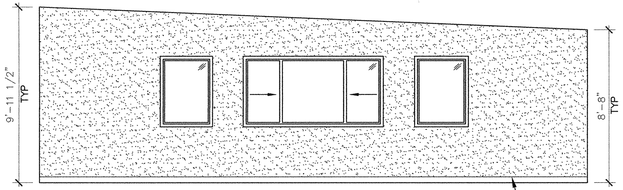

4

101 CLASSROOM

SCALE: 1/4" = 1"-0"

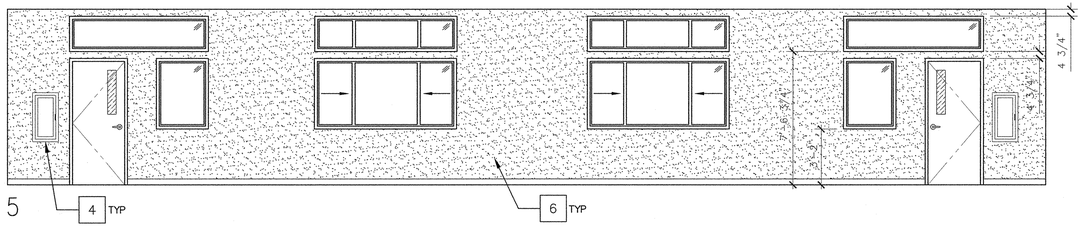

5

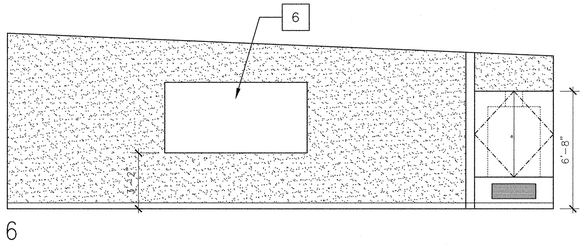

6

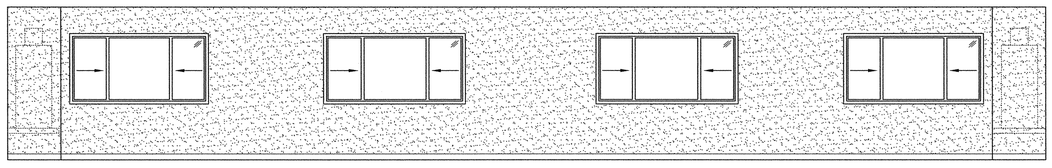

7

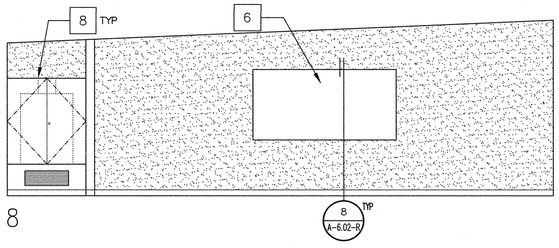

8

102 & 103 CLASSROOMS

SCALE: 1/4" = 1"-0"

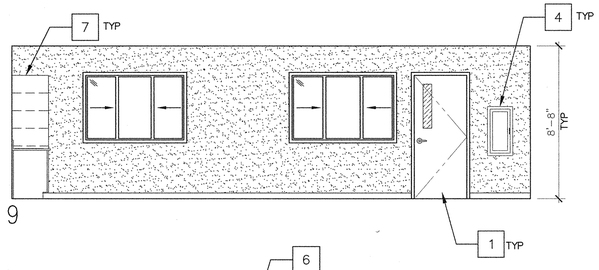

9

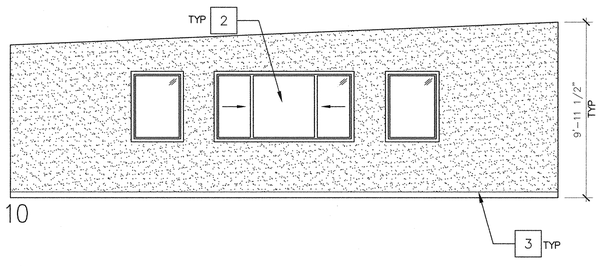

10

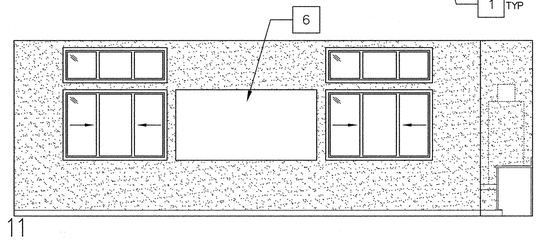

11

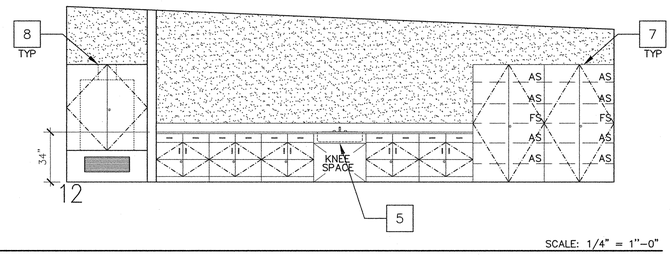

12

103 CLASSROOM

SCALE: 1/4" = 1"-0"

KEYNOTES [1]

1. DOOR, PER SCHEDULE – REFER TO SHEET A-1.21 (02-113899)
2. WINDOW PER SCHEDULE – REFER TO SHEET A-1.21 (02-113899)
3. 4" RUBBER TOP SET BASE
4. FIRE EXTINGUISHER – SEE DETAIL 1&2/A-6.02-R
5. ACCESSIBLE SINK – SEE DETAIL 5/A-2.20 (02-113899)
6. 4' X 8' MARKERBOARD – SEE DETAIL 8/A-6.02-R
7. PLASTIC LAMINATE TALL CAB, TYP – SEE DTL 1/A-1.21 (PC-02-113899)
8. HVAC UNIT CABINET-SEE DETAIL 9/A-6.02-R AND SHEET M-1.00-R

LEGEND

VINYL COVERED TACKABLE WALLBOARD (GROUP 1 CHATFIELD-CLARKE) ON 1/2" GYP. BOARD – TYP

*REFER TO SHEET A-1.21-R (02-113899) FOR FINISH SCHEDULE

GENERAL NOTES

NOTE: THIS SHEET REVISED A-2.00 OF (PC-02-113899)

1. SEE SHEET A-2.20 (02-113899) FOR ACCESSIBLE MOUNTING HEIGHTS AND OTHER REQUIRED ACCESSIBLE DIMENSIONS
2. ALL DIMENSIONS ARE CLEARANCES FORM FINISH MATERIALS
3. ALL CASEWORK TO BE PROVIDED BY SITE CONTRACTOR, UNLESS NOTED. MODULAR MANUFACTURER TO PROVIDE ALL BLOCKING FOR PROPER INSTALLATION
4. FOR ADDITIONAL DETAILS REFER TO A-2.00 OF PC-02-113899 [KEYNOTES: 05, 08, 10, 11, 12 AND 20]

JTS MODULAR
DESIGN • BUILD • TRANSPORT• ENJOY
7001 MC Divit DRIVE
BAKERSFIELD, CA 93313
WWW.JTSMODULAR.COM
OFFICE: (661) 835-9270

STRUCTURAL ENGINEER OF RECORD
ORION
Structural Engineering, Inc.
12257 OLD POMERADO ROAD, SUITE A
POWAY, CA 92064
PHONE (858) 679-1974
FAX (858) 679 1975

REGISTERED PROFESSIONAL ENGINEER RYAN J. ORR No. S 4429 EXP. 12/31/18 STRUCTURAL STATE OF CALIFORNIA

NEW CLASSROOM BUILDING
MONSON - SULTANA ELEMENTARY SCHOOL
10643 AVENUE 416, DINUBA, CA 93618
MONSON - SULTANA JOINT UNION ELEMENTARY SCHOOL DISTRICT

IDENTIFICATION STAMP
DIVISION OF THE STATE ARCHITECT
CODE 2013 CBC

IDENTIFICATION STAMP DIV. OF THE STATE ARCHITECT
02 117009
AC FLS SS
DATE 7/23/18

JTS JOB#: 06-0246
DATE: 7/16/2018

INTERIOR ELEVATIONS

A-2.00-R

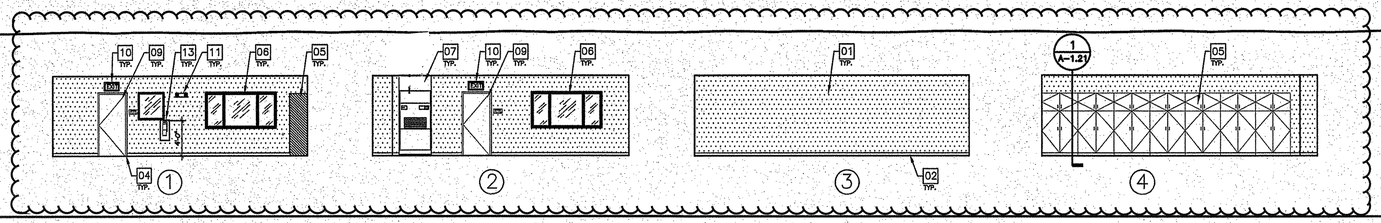

2 MODULAR INTERIOR ELEVATION

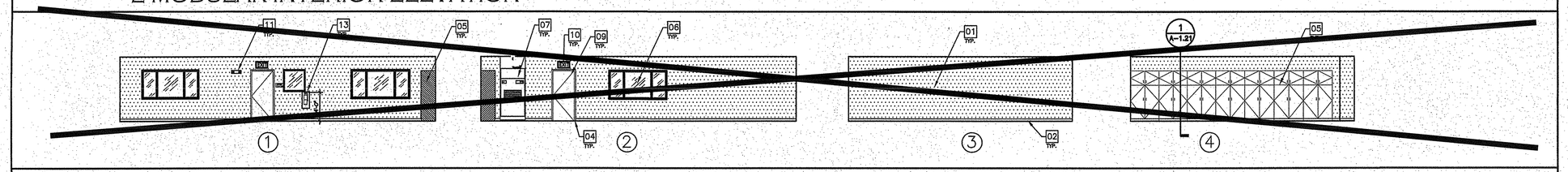

3 MODULAR INTERIOR ELEVATION

SCALE: 1/8"=1'-0"

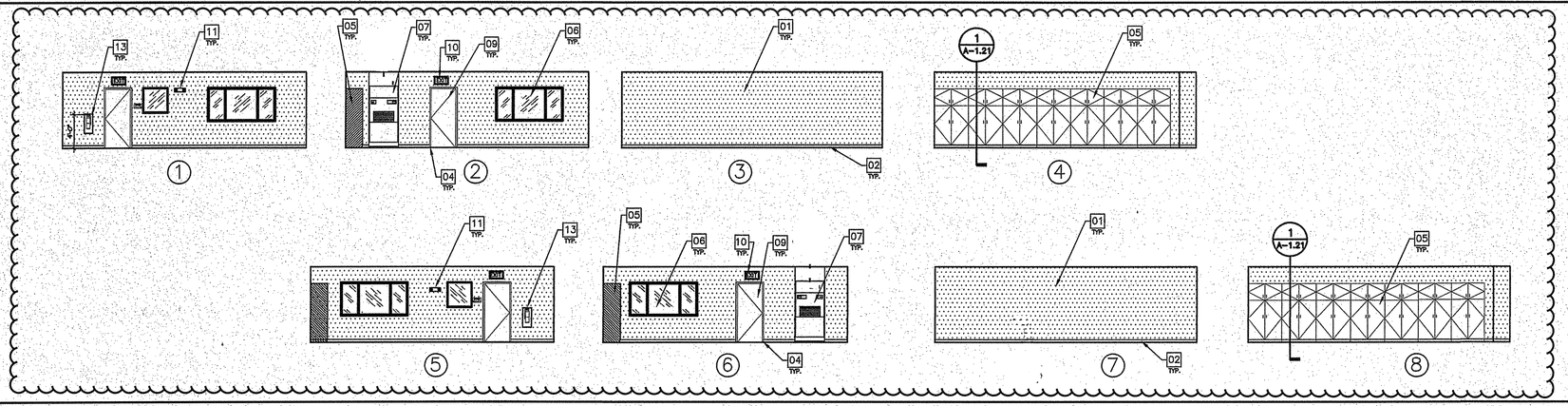

4 MODULAR INTERIOR ELEVATION

SCALE: 1/8"=1'-0"

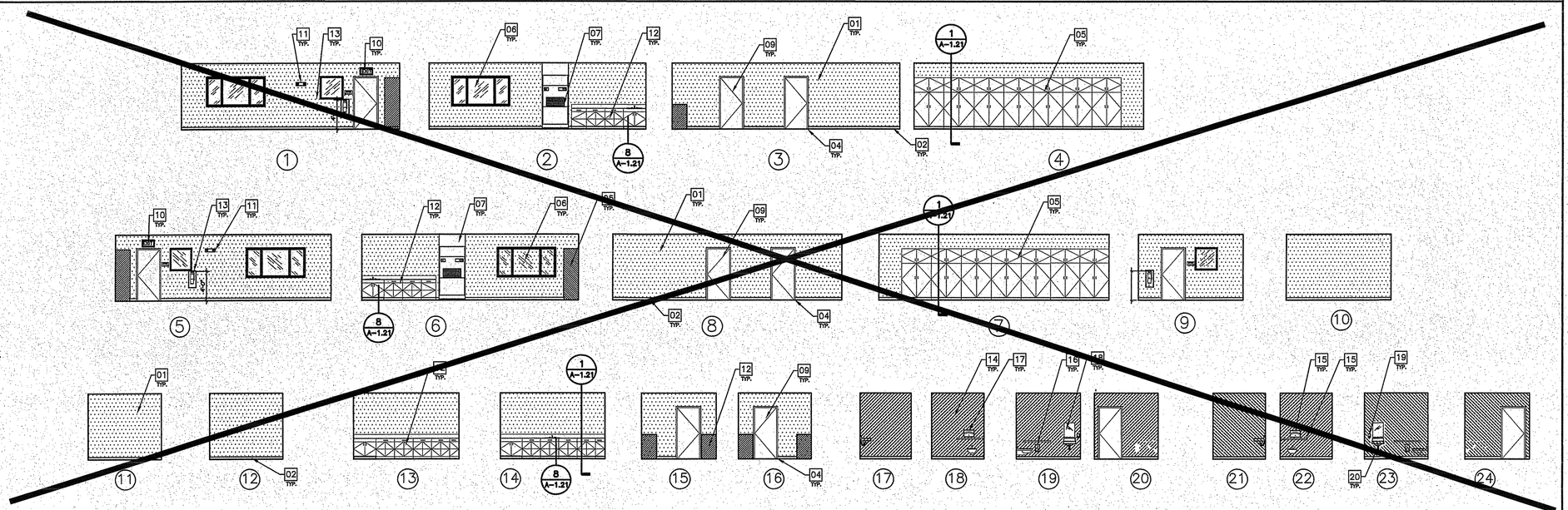

5 MODULAR INTERIOR ELEVATION

SCALE: 1/8"=1'-0"

KEYNOTES

FIRE EXTINGUISHER

01 TACKBOARD OVER 1/2" GYPSUM BOARD WALLS TYPICAL WHERE SHADED

02 4" RUBBER TOP SET BASE

03 NOT USED

04 HOLLOW METAL DOOR FRAME

05 WALL CABINETS TYP. SEE A-1.21 DETAIL #1 FOR ATTACHMENT DETAILS

06 8'-0" X 4'-0" SLIDING ALUMINUM WINDOW

07 HVAC UNIT

08 RETURN GRILL OF WALL PAK UNIT

09 DOOR TYP. SEE SHEET A-1.21

10 EXIT SIGN

11 90 MIN. EMERGENCY BATTERY BACKUP LIGHTING

12 BASE CABINETS TYP. FOR ATTACHMENT DETAIL SEE A-1.21 DETAIL #2.
BASE CABINET HEIGHT: 28" MIN. - 34" MAX.
CABINETS SIZED FOR HIGH SCHOOL USE U.N.O.

13 PORTABLE FIRE EXTINGUISHER MOUNTED AT 48" A.F.F. AND WITHIN 5'-0" OF EXIT EGRESS

14 FRP ON WALLS

15 GRAB BAR

16 TOILET PAPER DISPENSER

17 TOILET SEAT COVER DISPENSER

18 MIRROR

19 SOAP DISPENSER

20 INSULATE ALL EXPOSED HOT WATER & WASTE PIPES

21 FOR OTHERS REFER TO A-2.00-R

JTS MODULAR
DESIGN • BUILD • TRANSPORT • ENJOY

COMMERCIAL INSTITUTIONAL AND RESIDENTIAL MODULAR BUILDINGS DESIGN & PLANNING

7001 Mc Divitt Dr.
Bakersfield, CA 93313
Office: (661) 835-9270
Plant: (661) 833-2940
Fax: (661) 847-1007
www.jtsmodular.com

STRUCTURAL ENGINEER OF RECORD
ORION
Structural Engineering, Inc.
12257 OLD POMERADO ROAD, SUITE A
POWAY, CA 92064
PHONE (858) 679-1974
FAX (858) 679 1975

SOG-32
RE-LOCATABLE
BUILDING PC

FILE: PC-JTS

IDENTIFICATION STAMP
DIV. OF THE STATE ARCHITECT
PRE CHECK (PC) DOCUMENT
CODE 2013 CBC
A SEPARATE PROJECT APPLICATION
FOR CONSTRUCTION IS REQUIRED

APPROVALS

IDENTIFICATION STAMP
DIV. OF THE STATE ARCHITECT

FILE # PC-JTS
APPL. # 02-113899
AC F/LS SS
DATE 3/19/15

DATE

PROJECT 06-0140

PC

REGISTERED PROFESSIONAL ENGINEER
RYAN J. OMER
No. S 4437
Exp. 12/31/15
STRUCTURAL
STATE OF CALIFORNIA

IDENTIFICATION STAMP
DIV. OF THE STATE ARCHITECT
02 117009
AC F/LS SS
DATE 7/23/18

SHEET NAME

INTERIOR ELEVATIONS 2M - 5M

SHEET NUMBER

A-2.00

ENTRANCES & EXITS

ALL ENTRANCES AND ALL EXTERIOR GROUND FLOOR EXIT DOORS TO BUILDINGS AND FACILITIES SHALL BE MADE ACCESSIBLE TO PERSONS WITH DISABILITIES. IN COMPLIANCE WITH 11B-206.4.

EXITS DOORS SHALL BE OPERABLE FROM THE INSIDE WITHOUT THE USE OF A KEY OR ANY SPECIAL KNOWLEDGE OR EFFORT. SEC 1008.1.9.

MANUALLY OPERATING EDGE OR SURFACE-MOUNTED FLUSH BOLTS AND SURFACE BOLTS ARE PROHIBITED. SECTION 1008.1.9.4

LATCHING AND LOCKING DOORS THAT ARE HAND ACTIVATED AND WHICH ARE IN A PATH OF TRAVEL SHALL BE OPERABLE WITH A SINGLE EFFORT BY LEVER TYPE HARDWARE, PANIC BARS, PUSH-PULL ACTIVATING BARS, OR OTHER HARDWARE DESIGNED TO PROVIDE PASSAGE WITHOUT REQUIRING THE ABILITY TO GRASP THE OPENING HARDWARE. LOCKED EXIT DOORS SHALL OPERATE AS ABOVE IN EGRESS DIRECTION. SEC 1008.1.9.1 & 11B-404.2.7

HAND-ACTIVATED DOOR OPENING HARDWARE SHALL BE CENTERED BETWEEN 30" AND 44" ABOVE THE FLOOR. SEC 1008.1.9.2 & 11B-404.2.7

MINIMUM MANEUVERING CLEARANCES AT DOORS SHALL BE AS SHOWN IN FIGURE 11B-404.2.4.1 THE FLOOR OR GROUND AREA WITHIN THE REQUIRED CLEARANCES SHALL BE LEVEL AND CLEAR. SEC 11B-404.2.4

THERE SHALL BE A LEVEL AND CLEAR FLOOR OR LANDING ON EACH SIDE OF A DOOR. THE LEVEL AREA SHALL HAVE A LENGTH IN THE DIRECTION OF DOOR SWING OF AT LEAST 60" AND THE LENGTH OPPOSITE THE DIRECTION OF DOOR SWING OF 48" AS MEASURED AT RIGHT ANGLES TO THE PLANE OF THE DOOR IN THE CLOSED POSITION. SEC 11B-404.2.4 FIGURE 11B-404.2.4.1 & TABLE 11B-404.2.1

THE WIDTH OF THE LEVEL AREA ON THE SIDE TO WHICH THE DOOR SWINGS SHALL EXTEND A MINIMUM OF 24" PAST THE STRIKE EDGE OF THE DOOR FOR EXTERIOR DOORS AND A MINIMUM OF 18" PAST THE STRIKE EDGE FOR INTERIOR DOORS. SEC 11B-404.2.4 FIGURE 11B-404.2.4.1 & TABLE 11B-404.2.1

THE FLOOR OR LANDING SHALL BE NOT MORE THAN 1/2" LOWER THAN THE THRESHOLD OF THE DOORWAY. SEC 11B-404.2.5

THE BOTTOM 10" OF ALL DOORS EXCEPT AUTOMATIC AND SLIDING SHALL HAVE A SMOOTH, UNINTERRUPTED SURFACE TO ALLOW THE DOOR TO BE OPENED BY A WHEELCHAIR FOOTREST WITHOUT CREATING A TRAP OR HAZARDOUS CONDITION. WHERE NARROW FRAME DOORS ARE USED, A 10" HIGH SMOOTH PANEL SHALL BE INSTALLED ON THE PUSH SIDE OF THE DOOR, WHICH WILL ALLOW THE DOOR TO BE OPENED BY A WHEELCHAIR FOOTREST WITHOUT CREATING A TRAP OR HAZARDOUS CONDITION. SEC 11B-404.2.10.

MAXIMUM EFFORT TO OPERATE DOORS SHALL NOT EXCEED 5 POUNDS FOR EXTERIOR DOORS AND 5 POUNDS FOR INTERIOR DOORS, SUCH PULL OR PUSH EFFORT BEING APPLIED AT RIGHT ANGLES TO HINGED DOORS AND AT THE CENTER PLANE OF SLIDING OR FOLDING DOORS. COMPENSATING DEVICES OR AUTOMATIC DOOR OPERATORS MAY BE UTILIZED TO MEET THE ABOVE STANDARDS. WHERE FIRE DOORS ARE REQUIRED, THE MAXIMUM EFFORT TO OPERATE THE DOOR MAY BE INCREASED TO THE MAXIMUM ALLOWABLE BY THE APPROPRIATE ADMINISTRATIVE AUTHORITY, NOT TO EXCEED 15 POUNDS. SEC 11B-404.2.9.

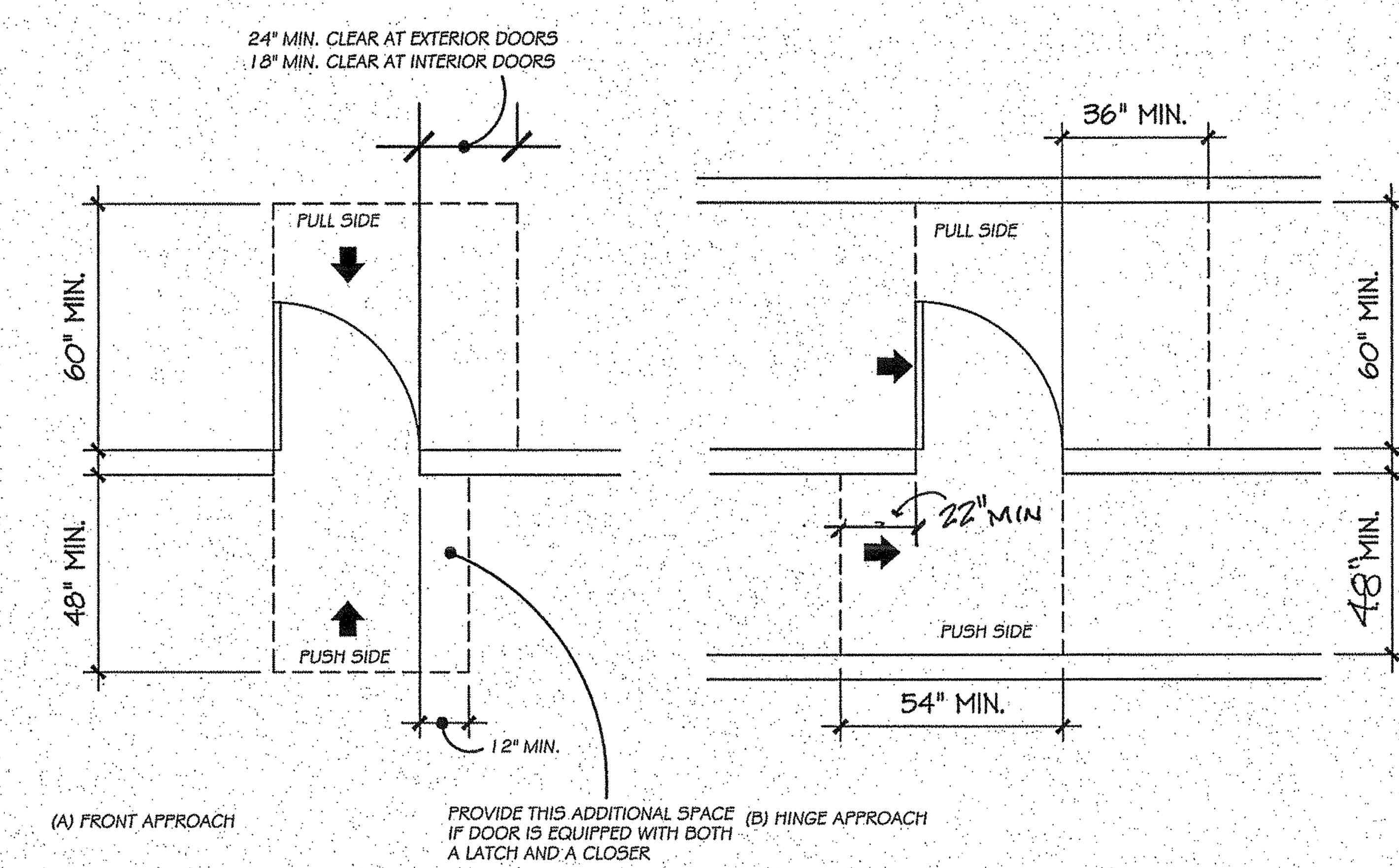

4 ENTRANCES & EXITS

CONTROLS AND OPERATING MECHANISMS SHALL BE OPERABLE WITH ONE HAND AND SHALL NOT REQUIRE TIGHT GRAPING, PINCHING, OR TWISTING OF THE WRIST. NO GREATER THAN 5 LBS. OF FORCE SHALL BE REQUIRED TO ACTIVATE CONTROLS. SEE ALSO SECTIONS 210-7(G). 380-8(C) AND 760-9, CALIFORNIA ELECTRICAL CODE, FOR ELECTRICAL INSTALLATION (11B-309.4).

GENERAL CONTROLS AND OPERATING MECHANISMS REQUIRED TO BE ACCESSIBLE BY SECTION 108.1 SHALL COMPLY WITH THE REQUIREMENTS OF THIS SECTION (11B-205.1).

CLEAR FLOOR SPACE. CLEAR FLOOR SPACE COMPLYING WITH SECTION 11B-305 THAT ALLOWS A FORWARD OR PARALLEL APPROACH BY A PERSON USING A WHEELCHAIR SHALL BE PROVIDED AT CONTROLS, DISPENSERS, RECEPTACLES AND OTHER OPERABLE EQUIPMENT (11B-309.2)

THE ELECTRICAL AND COMMUNICATION SYSTEM RECEPTACLE OUTLETS ON BRANCH CIRCUITS OF 30 AMPERES OR LESS SHALL BE INSTALLED NOT MORE THAN 48" TO TOP OF BOX NOR LESS THAN 15" ABOVE THE FLOOR OR WORKING PLATFORM TO BOTTOM OF BOX. SEC 11B-308.1.2

THE TOP OF BOX OF CONTROLS OR SWITCHES INTENDED TO BE USED BY THE OCCUPANT OF THE ROOM OR AREA TO CONTROL LIGHTING AND RECEPTACLE OUTLETS, APPLIANCES, OR COOLING, HEATING, AND VENTILATING EQUIPMENT SHALL NOT BE MORE THAN 48" ABOVE THE FLOOR OR WORKING PLATFORM, NOR LESS THAN IT 15" TO BOT. BOX SEC 380-8(C). SEC 11B-308.1.1.

THE TOP OF FIRE ALARM INITIATING DEVICES (BOXES) OPERATING HANDLE SHALL BE LOCATED 48" MAX AND 42" MIN. TO TOP OF BOX ABOVE THE LEVEL OF THE FLOOR, WORKING PLATFORM, GROUND SURFACE, OR SIDEWALK. SEC 907.4.2.2 & 907.5.2.3.

THE INSTALLATION OF FIRE ALARM EQUIPMENT AND SYSTEMS IN ANY OCCUPANCY WITHIN THE SCOPE OF THESE REGULATIONS SHALL BE IN ACCORDANCE WITH THE PROVISIONS OF THE CALIFORNIA ELECTRICAL CODE. SECTION 7201.

THE HIGHEST OPERABLE PART OF ALL CONTROLS, DISPENSERS, RECEPTACLES, AND OTHER OPERABLE EQUIPMENT SHALL BE PLACED WITHIN AT LEAST ONE OF THE REACH RANGES SPECIFIED IN SECTIONS 11B-308.2 AND 11B-308.3. SECTION 11B-309.3

6 ELECTRICAL NOTES

SANITARY FACILITY FIXTURES & ACCESSORIES

THE HEIGHT OF ACCESSIBLE WATER CLOSETS SHALL BE A MINIMUM OF 17" AND A MAXIMUM OF 19" MEASURED TO THE TOP OF A MAXIMUM 2" HIGH TOILET SEAT, SECTION 11B-604.4

A CLEAR FLOOR SPACE 30" BY 48" SHALL BE PROVIDED IN FRONT OF A LAVATORY TO ALLOW A FORWARD APPROACH. SUCH CLEAR FLOOR SPACE SHALL ADJOIN OR OVERLAP AN ACCESSIBLE ROUTE AND SHALL EXTEND A MAXIMUM OF 19" INTO KNEE AND TOE SPACE UNDERNEATH THE LAVATORY. SECTION 11B-606.2

LAVATORIES ADJACENT TO A WALL SHALL BE MOUNTED WITH A MINIMUM DISTANCE OF 18" TO THE CENTER LINE OF THE FIXTURE. SECTION 11B-606.6

LAVATORIES SHALL BE MOUNTED WITH THE RIM OR COUNTER SURFACE NO HIGHER THAN 34" ABOVE THE FINISHED FLOOR AND WITH A CLEARANCE OF AT LEAST 29" FROM THE FLOOR TO THE BOTTOM OF THE APRON WITH KNEE CLEARANCE UNDER THE FRONT LIP EXTENDING A MINIMUM OF 30" IN WIDTH AND 8" MINIMUM DEPTH AT THE TOP. TOE CLEARANCE SHALL BE THE SAME WIDTH AND SHALL BE A MINIMUM OF 9" HIGH FROM THE FLOOR AND A MINIMUM OF 17" DEEP FROM THE FRONT OF THE LAVATORY. SECTION 11B-606.3 AND SECTIONS 11B-306.3 (KNEE CLEARANCE) AND 11B-306.2 (TOE CLEARANCE).

HOT WATER AND DRAIN PIPES ACCESSIBLE UNDER LAVATORIES SHALL BE INSULATED OR OTHERWISE COVERED. THERE SHALL BE NO SHARP OR ABRASIVE SURFACES UNDER LAVATORIES. SEC 11B-606.5.

CONTROLS FOR WATER CLOSET FLUSH VALVES SHALL BE MOUNTED ON THE WIDE SIDE OF TOILET AREAS. SEC 11B-604.6.

WATER CLOSET AND URINAL FLUSH VALVE CONTROLS, AND FAUCET AND OPERATING MECHANISM CONTROLS, SHALL BE OPERABLE WITH ONE HAND, SHALL NOT REQUIRE TIGHT GRASPING, PINCHING, OR TWISTING OF THE WRIST, AND SHALL BE MOUNTED NO MORE THAN 44" ABOVE THE FLOOR. SEC 11B-604.6, 11B605.4, 11B-606.4.

HAND-OPERATED METERING FAUCETS ARE ALLOWED IF THE FAUCET REMAINS OPEN FOR AT LEAST 10 SECONDS. SEC 11B-606.4.

MIRRORS SHALL BE MOUNTED WITH THE BOTTOM EDGE OF REFLECTIVE SURFACE NO HIGHER THAN 40" FROM THE FLOOR. SEC 11B-603.3.

WHERE TOWEL, SANITARY NAPKINS, WASTE RECEPTACLES, AND OTHER SIMILAR DISPENSING AND DISPOSAL FIXTURES ARE PROVIDED, AT LEAST ONE OF EACH TYPE SHALL BE LOCATED WITH ALL OPERABLE PARTS, INCLUDING COIN SLOTS, WITHIN 40" FROM THE FINISHED FLOOR AND SHALL COMPLY WITH SECTION 11B-603.5

CENTER LINE OF TOILET TISSUE DISPENSERS SHALL BE LOCATED ON THE WALL BETWEEN 7"-9" OF THE FRONT EDGE OF THE TOILET SEAT AND NO LOWER THAN 19" FROM THE FLOOR. DISPENSERS THAT CONTROL DELIVERY OR THAT DO NOT PERMIT CONTINUOUS PAPER FLOW SHALL NOT BE USED.SEC 11B-604.7.

URINALS, AT LEAST ONE SHALL HAVE A CLEAR FLOOR SPACE 30 INCHES BY 48 INCHES (762 MM BY 1219 MM) IN FRONT OF THE URINAL TO ALLOW FORWARD APPROACH. THIS CLEAR SPACE SHALL COMPLY WITH SECTION 1118B.4. SEC 11B-605.3.

IN OTHER THAN DWELLING UNITS, TOILET ROOM FLOORS SHALL HAVE A SMOOTH, HARD, NON-ABSORBENT SURFACE SUCH AS PORTLAND CEMENT, CONCRETE, CERAMIC TILE OR OTHER APPROVED MATERIAL WHICH EXTENDS UPWARD ONTO THE WALLS AT LEAST 5". WALLS WITHIN WATER CLOSET COMPARTMENTS AND WALLS WITH 24" OF THE FRONT AND SIDES OF URINALS SHALL BE SIMILARLY FINISHED TO A HEIGHT OF 48" AND, EXCEPT FOR STRUCTURAL ELEMENTS, THE MATERIALS USED IN SUCH WALLS SHALL BE A TYPE WHICH IS NOT ADVERSELY AFFECTED BY MOISTURE. SEC 1210.2.1 THRU 1210.2.4.

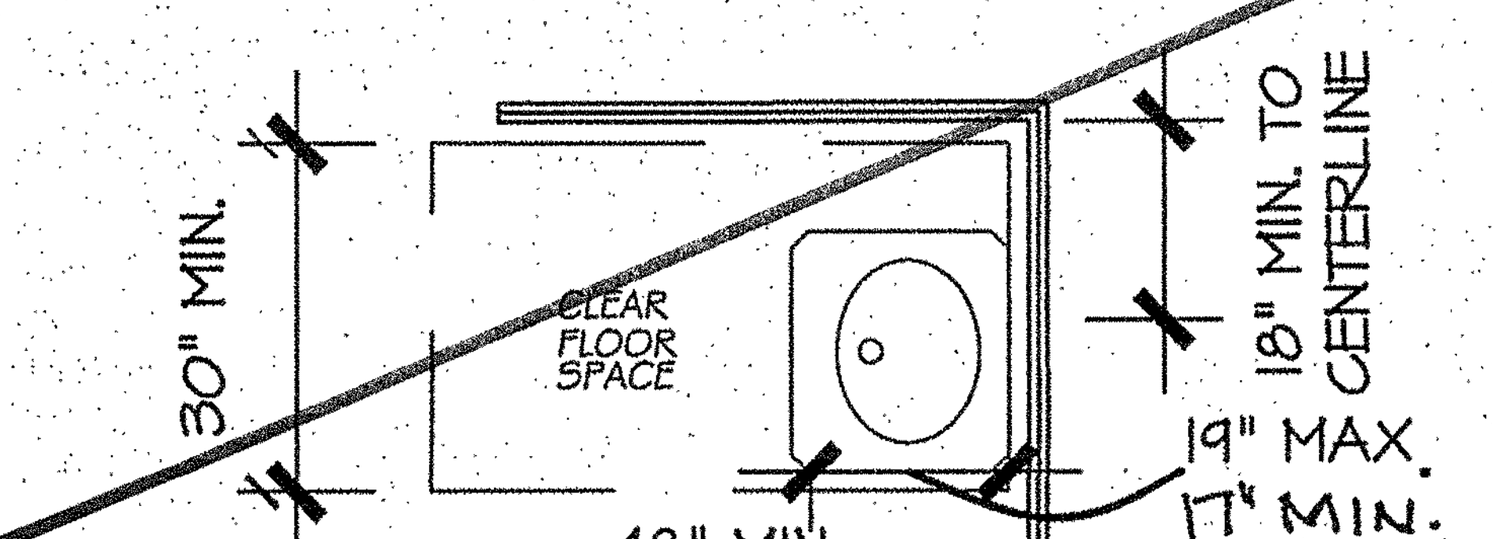

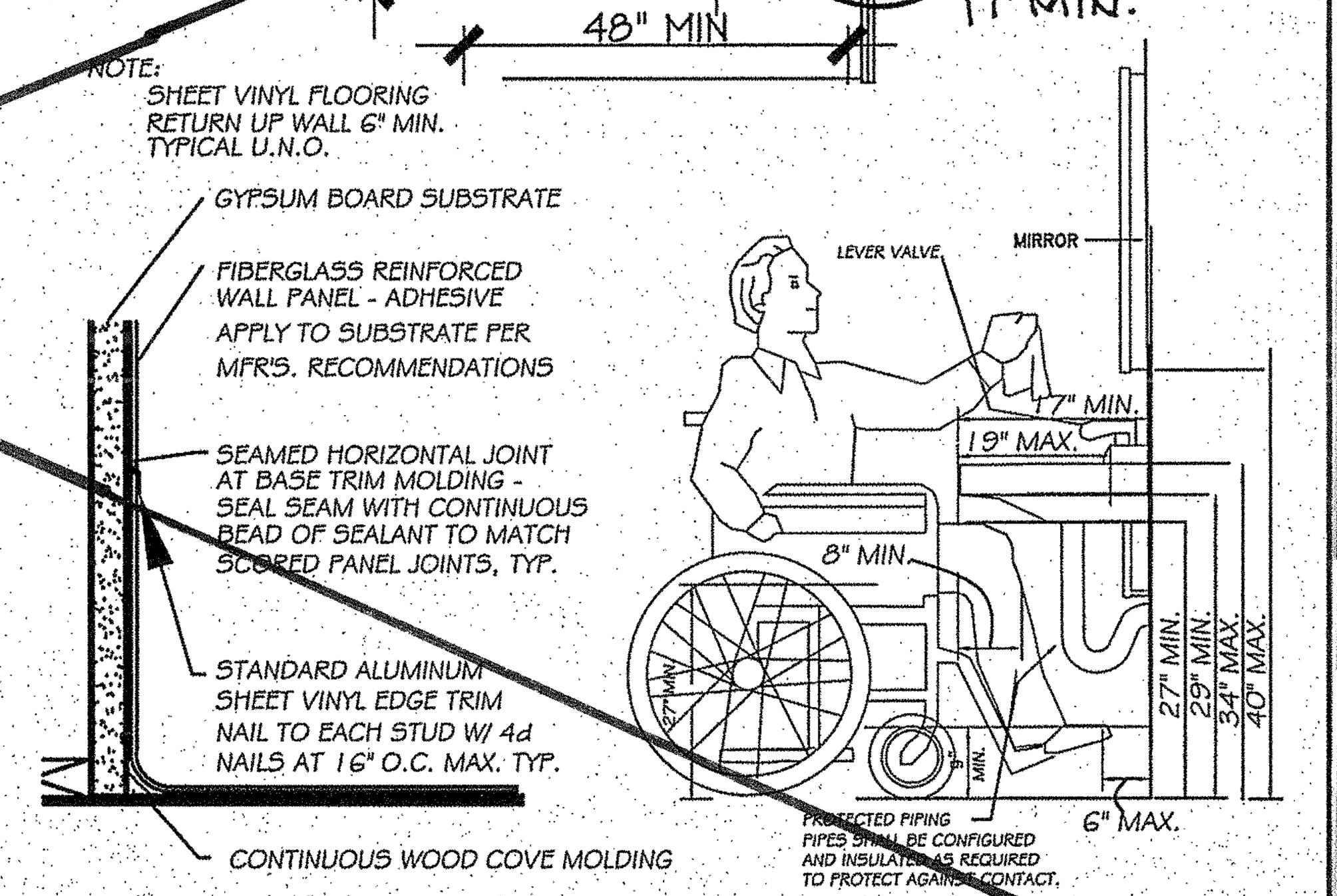

5 SANITARY FACILITIES FIXTURES

NOTES: 1) THESE DIMENSIONS ARE FOR TYPICAL MOUNTING HEIGHTS FOR ACCESSIBLE FIXTURES AND ACCESSORIES, UNLESS OTHERWISE NOTED. REFER TO FLOOR PLANS, INTERIOR ELEVATIONS, AND SPECIFICATIONS FOR ADDITIONAL INFORMATION.
2) REFER TO THE SPECIFICATIONS FOR TOILET ROOM ACCESSORIES.

NOTE:
THE FIXTURES AND ACCESSORIES SHOWN HEREIN ARE NOT NECESSARILY INCLUDED IN THIS PROJECT. REFER TO PLANS AND SPECIFICATIONS FOR FIXTURE OR ACCESSORY TYPE AND LOCATIONS.

1. THE NAMED ITEMS IN THIS DETAIL SHALL BE MOUNTED AT HEIGHTS ACCESSIBLE TO PERSONS WITH DISABILITIES.
2. MOUNT ALL FIXTURES AND ACCESSORIES AT HEIGHTS ILLUSTRATED IN THIS DETAIL UNLESS NOTED OTHERWISE ON THE PLANS.
3. ALL TOILET PARTITION DOORS TO BE SELF CLOSING.

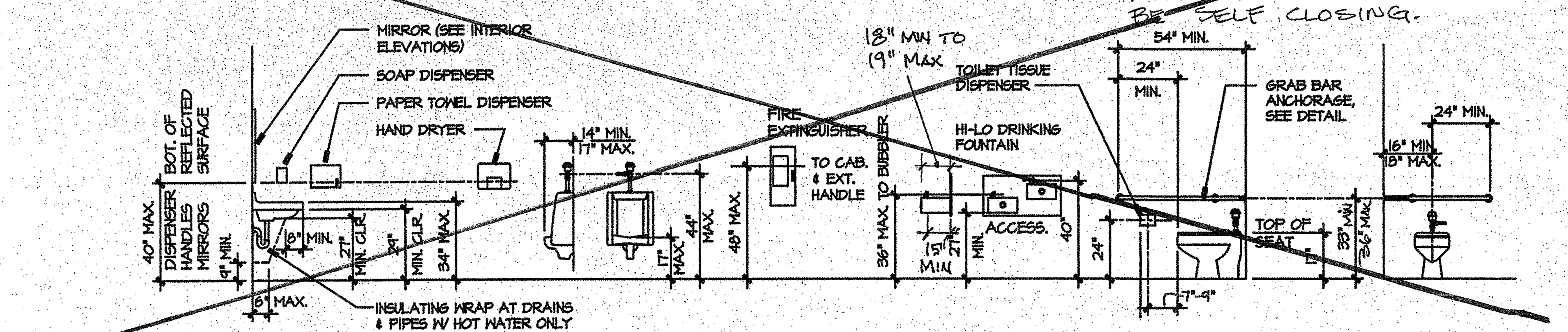

7 TYPICAL ACCESSIBLE MOUNTIG HIGHTS

SECTION 11B-302.1 GENERAL FLOOR OR GROUND SURFACES
GENERAL FLOOR OR GROUND SURFACES ALONG ACCESSIBLE ROUTES AND IN ACCESSIBLE ROOMS AND SPACES, INCLUDING FLOORS, WALKS, RAMPS, STAIRS, AND CURB RAMPS, SHALL BE STABLE, FIRM, AND SLIP-RESISTANT, AND SHALL COMPLY WITH THIS SECTION.

11B-303 CHANGE IN LEVEL
CHANGES IN LEVEL UP TO 1/4" MAY BE VERTICAL AND WITHOUT EDGE TREATMENT [SEE FIGURE 11B-303.2. CHANGES IN LEVEL BETWEEN 1/4" AND 1/2" SHALL BE BEVELED WITH A SLOPE NO GREATER THAN 1:2. FIGURE 11B-303.3

SECTION 11B-302.2 CARPET
IF CARPET OR CARPET TILE IS USED ON A GROUND OR FLOOR SURFACE, IT SHALL BE SECURELY ATTACHED; HAVE A FIRM CUSHION, PAD OR BACKING OR NO CUSHION OR PAD; AND HAVE A LEVEL LOOP, TEXTURED LOOP, LEVEL CUT PILE, OR LEVEL CUT/UNCUT PILE TEXTURE. THE MAXIMUM PILE HEIGHT SHALL BE 1/2". EXPOSED EDGES OF CARPET SHALL BE FASTENED TO FLOOR SURFACES AND HAVE TRIM ALONG THE ENTIRE LENGTH OF THE EXPOSED EDGE. CARPET EDGE TRIM SHALL COMPLY WITH SECTION 11B-303.

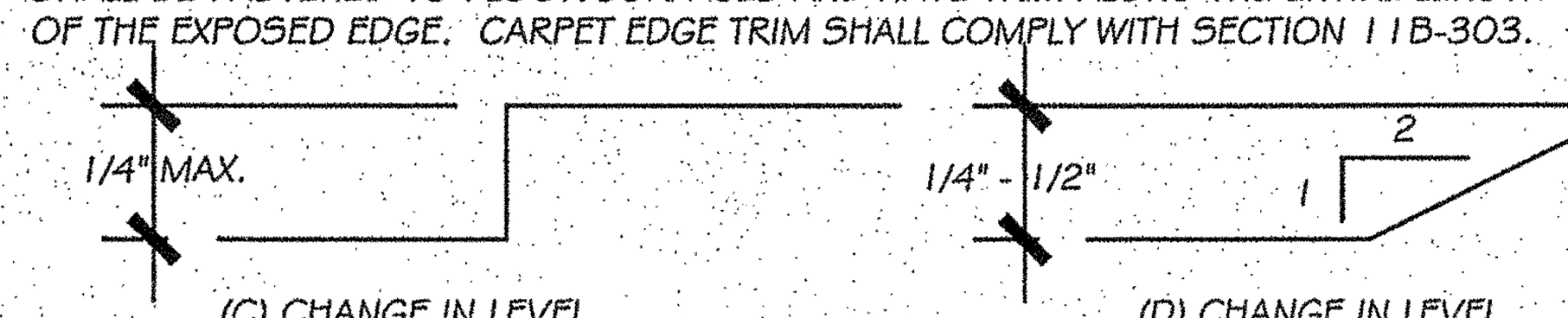

(C) CHANGE IN LEVEL

(D) CHANGE IN LEVEL

3 GROUND AND FLOORING SURFACES

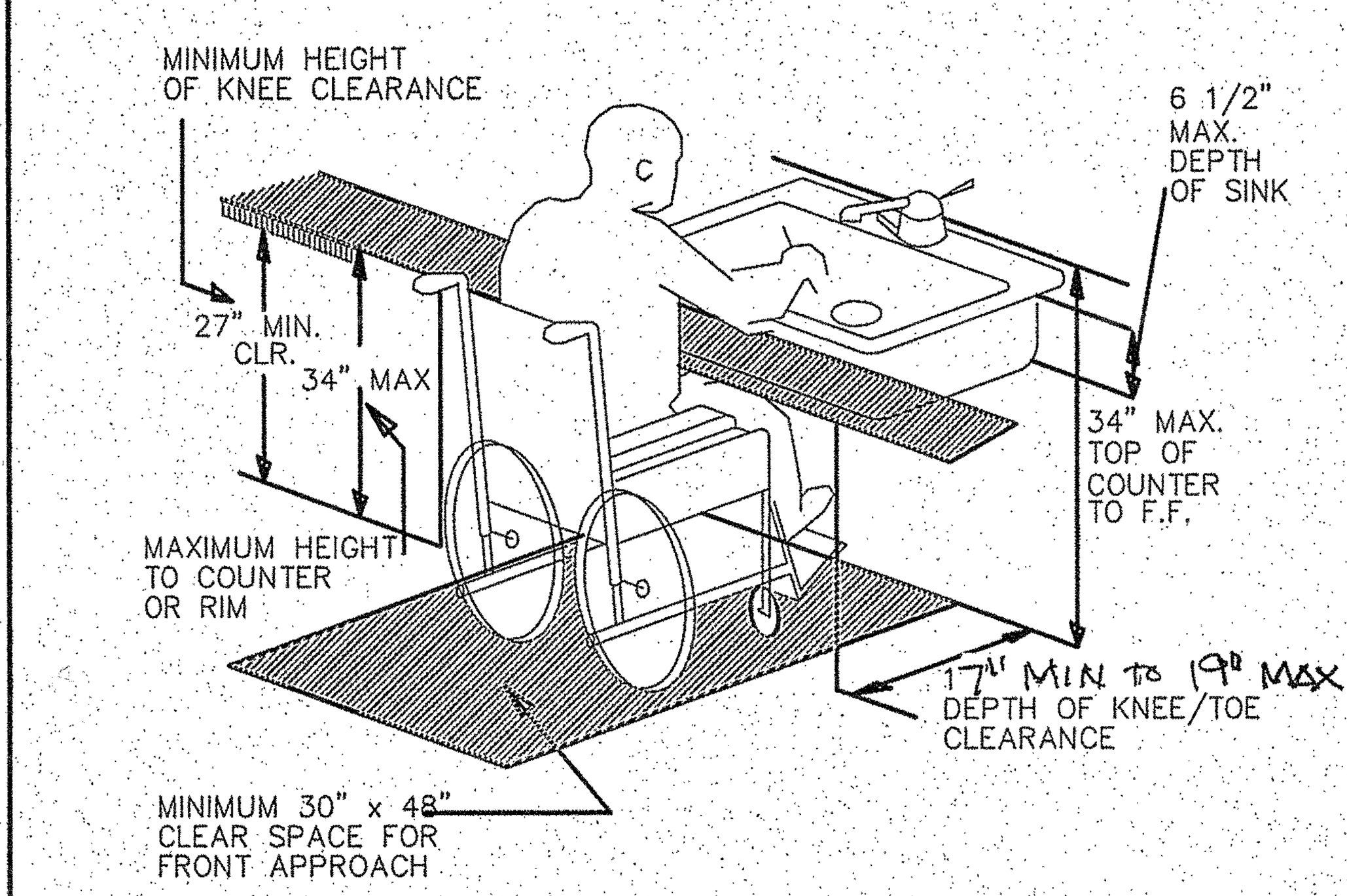

1 COUNTER WORKSPACE

GRAB BARS

GRAB BARS SHALL BE LOCATED ON EACH SIDE, OR ON ONE SIDE AND THE BACK OF THE ACCESSIBLE TOILET STALL OR COMPARTMENT. SEC 11B-604.5. FIG. 11B-604.5.1 & 11B-604.5.2

GRAB BARS AT THE SIDE SHALL BE AT LEAST 42" LONG WITH THE FRONT END POSITIONED 24" IN FRONT OF THE WATER CLOSET STOOL AND WITH THE BACK END POSITIONED NO MORE THAN 12" FROM THE REAR WALL. GRAB BARS AT THE BACK SHALL BE NOT LESS THAN 36" LONG. SEC 11B-604.5.1 & 11B-604.5.2. FIG. 11B-604.5.1 & 11B-604.5.2

GRAB BARS SHALL BE SECURELY ATTACHED 33" ABOVE AND PARALLEL TO THE FLOOR, EXCEPT THAT WHERE A TANK-TYPE TOILET IS USED WHICH OBSTRUCTS PLACEMENT AT 33", THE GRAB BAR MAY BE AS HIGH AS 36". SEC 11B-609.4.

THE DIAMETER OR WIDTH OF THE GRIPPING SURFACES OF A GRAB BAR SHALL BE 1-1/4" TO 2" OR THE SHAPE SHALL PROVIDE AN EQUIVALENT GRIPPING SURFACE. IF GRAB BARS ARE MOUNTED ADJACENT TO A WALL, THE SPACE BETWEEN THE WALL AND THE GRAB BARS SHALL BE 1-1/2". SEC 11B-609.2 & 11B-609.3 FIG. 11B-609.2.2 & 11B-609.3

THE STRUCTURAL STRENGTH OF GRAB BARS, TUB AND SHOWER SEATS, FASTENERS, AND MOUNTING DEVICES SHALL MEET THE FOLLOWING SPECIFICATIONS: 250 LBS. IN ANY DIRECTION. SEC 11B-609.8.

A GRAB BAR AND ANY WALL OR OTHER SURFACE ADJACENT TO IT SHALL BE FREE OF ANY SHARP OR ABRASIVE ELEMENTS. EDGES SHALL HAVE A MINIMUM RADIUS OF 1/8". SEC 11B-609.5

GRAB BARS SHALL NOT ROTATE WITHIN THEIR FITTINGS. SEC. 11B-609.6.

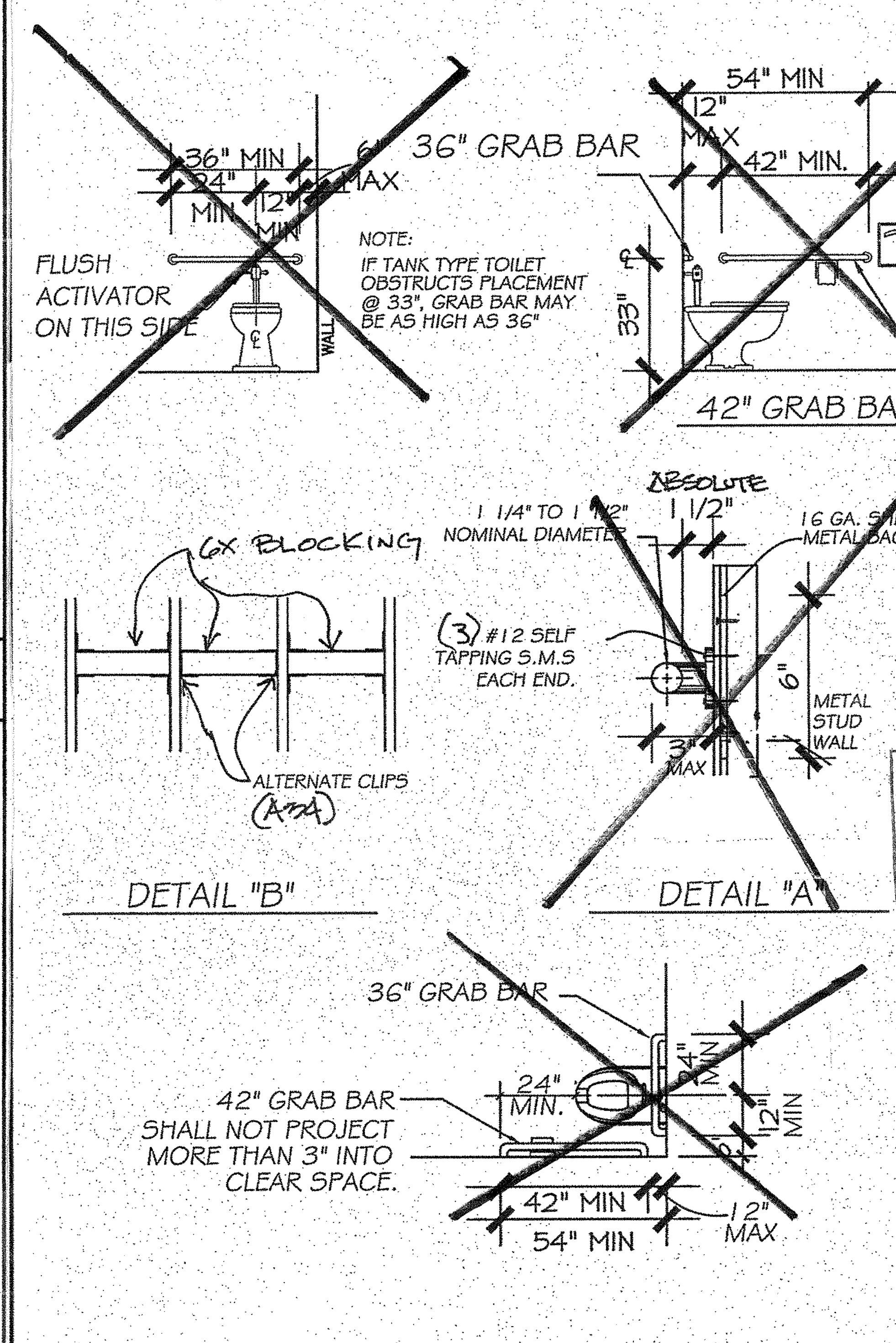

IDENTIFICATION STAMP
DIV. OF THE STATE ARCHITECT
02 117009
AC FLS SS
DATE 7/23/18

2 GRAB BARS

JTS MODULAR
DESIGN • BUILD • TRANSPORT • ENJOY

COMMERCIAL INSTITUTIONAL AND RESIDENTIAL MODULAR BUILDINGS DESIGN & PLANNING

7001 Mc Divitt Dr.
Bakersfield, CA 93313
Office: (661) 835-9270
Plant: (661) 833-2940
Fax: (661) 847-1007
www.jtsmodular.com

STRUCTURAL ENGINEER OF RECORD
ORION
Structural Engineering, Inc.
12257 OLD POMERADO ROAD, SUITE A
POWAY, CA 92064
PHONE (858) 679-1974
FAX (858) 679 1975

SOG-32 RE-LOCATABLE BUILDING PC

APPROVALS

IDENTIFICATION STAMP
DIV. OF THE STATE ARCHITECT
PRE CHECK (PC) DOCUMENT
CODE 2013 CBC
A SEPARATE PROJECT APPLICATION FOR CONSTRUCTION IS REQUIRED

FILE # PC-JTS
APPL.# 115899
AC F/LS SS
DATE 3/19/15

DATE

PROJECT XX-XXX

PC

REGISTERED PROFESSIONAL ENGINEER
RYAN J. OMER
No. S 4437
EXP. 12/31/
STRUCTURAL
STATE OF CALIFORNIA

SHEET NAME
ACCESSIBILITY DETAILS

SHEET NUMBER
A-2.20

KEYNOTES [CONT]:
FOR ADDITIONAL, REFER TO KEYNOTES 07,16,17 on A-3.04 OF PC-02-113899.

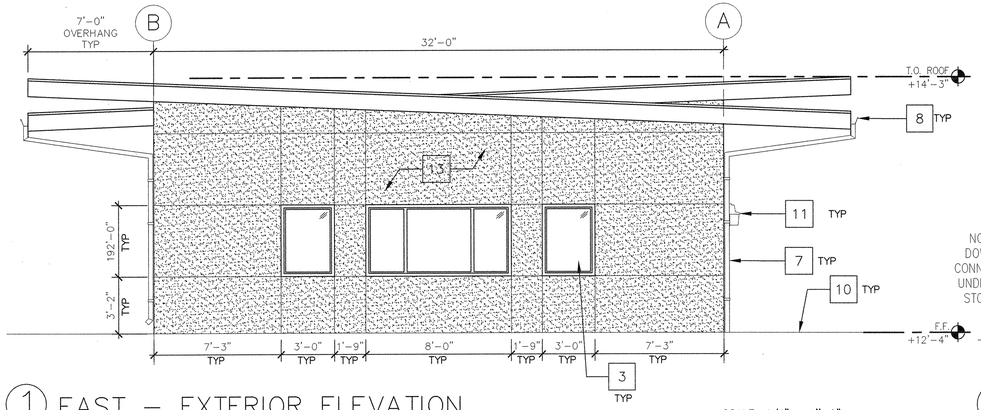

1 EAST – EXTERIOR ELEVATION

SCALE: 1/4" = 1"-0"

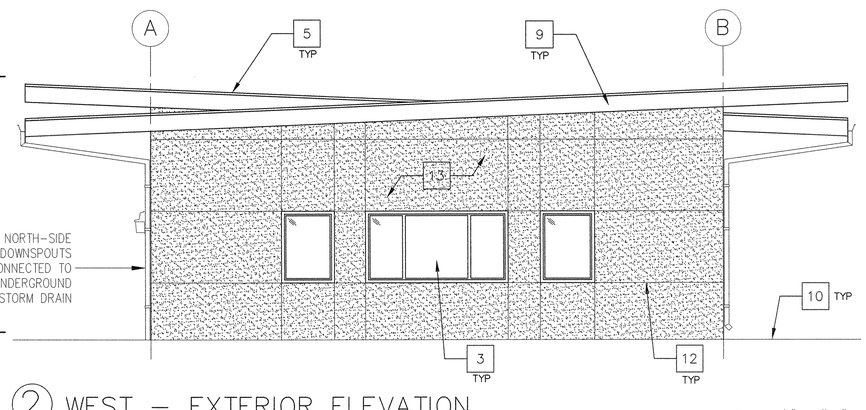

2 WEST – EXTERIOR ELEVATION

SCALE: 1/4" = 1"-0"

KEYNOTES [1]

1. 16 GAUGE PRESSED METAL DOOR FRAME WITH LOCK-IN ANCHORS (14 / A-6.00)
2. 1 3/4" THICK 18 GAUGE INSULATED METAL DOOR
3. NAIL-IN ALUMINUM WINDOW ASSEMBLY – INSTALL OVER 6" WIDE BUILDING PAPER FLASHING WITH 8d @ 24" o.c. (06 / A-6.00) (10 / A-6.00)
4. MODULE LINE
5. 24 GA STANDING SEAM METAL ROOFING
6. FIELD INSTALL ROOF PANEL SHOWN SHADED
7. 26 GA DOWNSPOUT (05 / A-6.00)
8. 26 GA GUTTER WITH CLOSED ENDS (07 / A-6.01)
9. 1 1/4" X 10" HARDBOARD FASCIA
10. CONCRETE FLATWORK BY OTHERS
11. ENERTRON 7800L COMPACT FLUORESCENT LIGHT FIXTURE OR EQUAL.
12. STUCCO CONTROL JOINT #1558x OR EQUAL– CONFORMS TO ASTM DI1784–81 (9 / A-6.00)
13. FACTORY APPLIED ELASTOMERIC, STUCCO FINISH. COLOR SELECTED BY ARCHITECT

LEGEND

ELASTOMERIC FINISH (COLOR SELECTED BY ARCHITECT), O/ 1/2" PERMABASE, O/ 1/2" PLYWOOD – SEE DTL 17/A-6.00 (02-113899)

(T) INDICATES TEMPERED GLASS

NOTE: THIS SHEET REVISED A-3.04 OF (PC-02-113899)

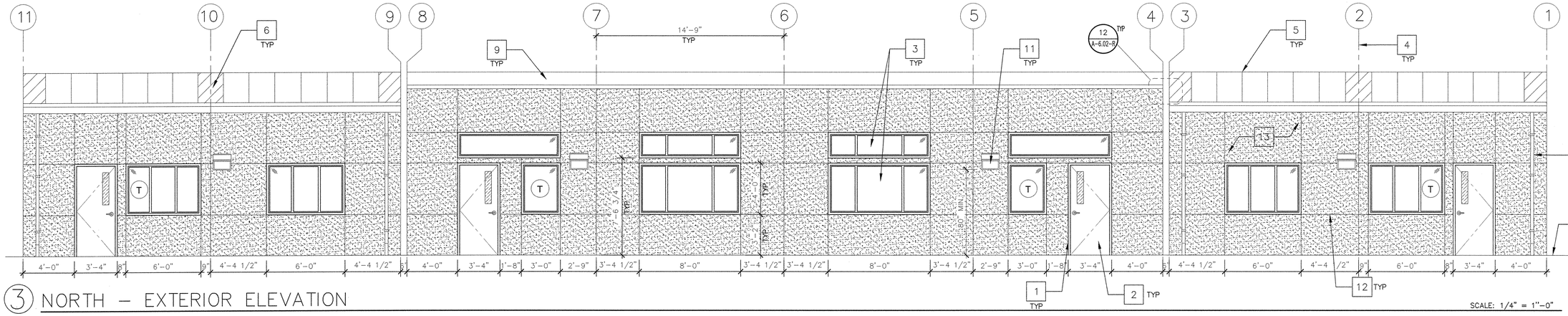

3 NORTH – EXTERIOR ELEVATION

SCALE: 1/4" = 1"-0"

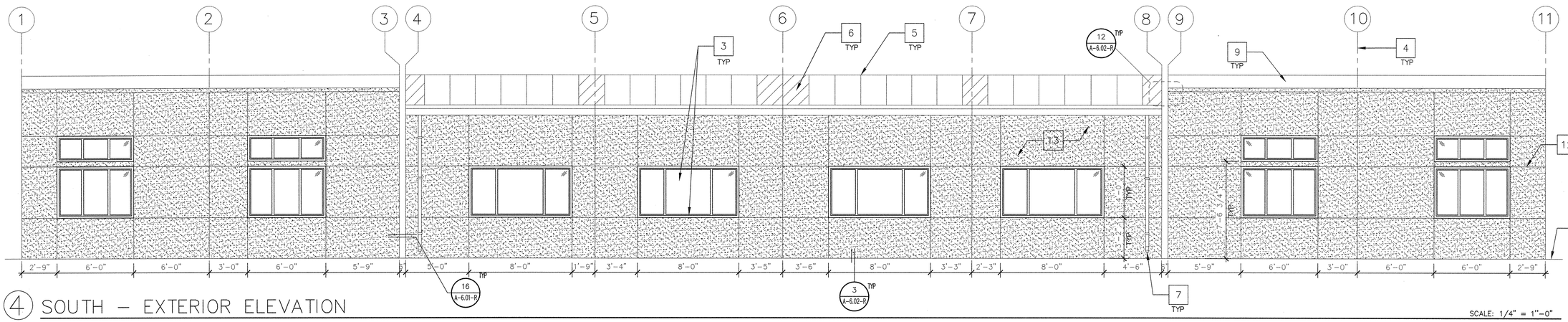

4 SOUTH – EXTERIOR ELEVATION

SCALE: 1/4" = 1"-0"

JTS MODULAR
DESIGN • BUILD • TRANSPORT • ENJOY
7001 MC Divitt DRIVE
BAKERSFIELD, CA 93313
WWW.JTSMODULAR.COM
OFFICE: (661) 835-9270

STRUCTURAL ENGINEER OF RECORD
ORION
Structural Engineering, Inc.
12257 OLD POMERADO ROAD, SUITE A
POWAY, CA 92064
PHONE (858) 679-1974
FAX (858) 679 1975

REGISTERED PROFESSIONAL ENGINEER
ALAN J. OMER
No. S 4439
EXP. 12/31/18
STRUCTURAL
STATE OF CALIFORNIA

NEW CLASSROOM BUILDING
MONSON - SULTANA ELEMENTARY SCHOOL
10643 AVENUE 416, DINUBA, CA 93618
MONSON - SULTANA JOINT UNION ELEMENTARY SCHOOL DISTRICT

IDENTIFICATION STAMP
DIVISION OF THE STATE ARCHITECT
CODE 2013 CBC

IDENTIFICATION STAMP
DIV. OF THE STATE ARCHITECT
02 117009
AC RS SS
DATE 7/23/18

JTS JOB#: 06-0246
DATE: 7/16/2018

EXTERIOR ELEVATIONS

A-3.04-R

MONO SLOPE ROOF TYPICAL SIDE ELEVATION

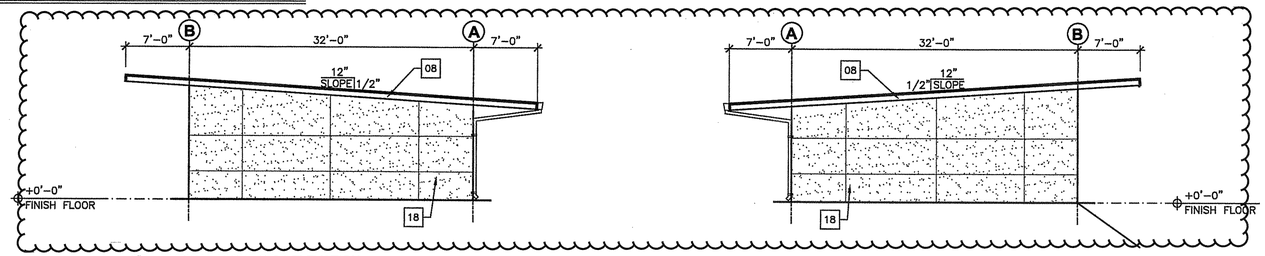

2 TYPICAL RIGHT SIDE ELEVATION — SCALE: 1/8" = 1'-0"

1 TYPICAL LEFT SIDE ELEVATION — SCALE: 1/8" = 1'-0"

2 MODULES

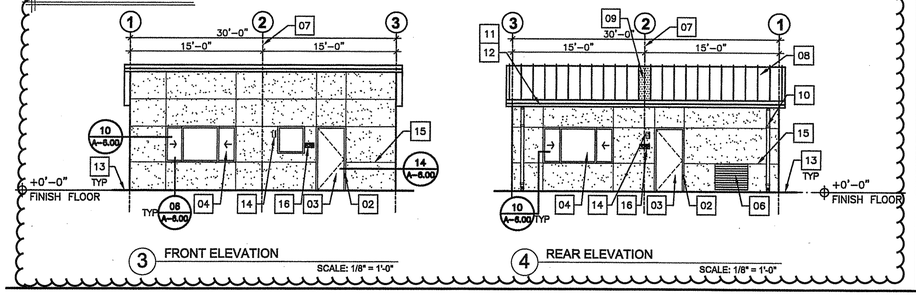

3 FRONT ELEVATION — SCALE: 1/8" = 1'-0"

4 REAR ELEVATION — SCALE: 1/8" = 1'-0"

2 MODULES W/ RESTROOM

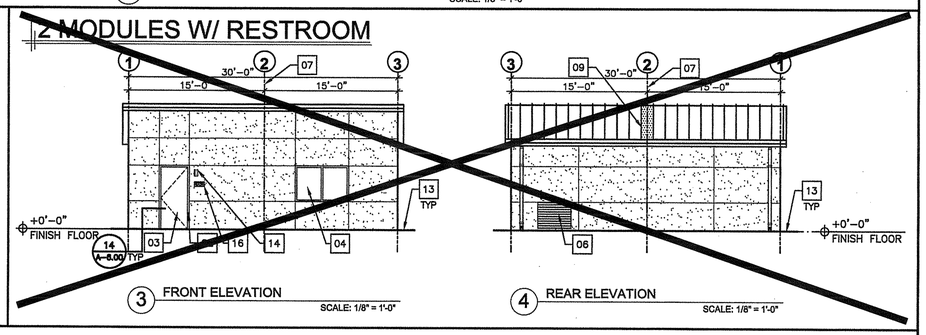

3 FRONT ELEVATION — SCALE: 1/8" = 1'-0"

4 REAR ELEVATION — SCALE: 1/8" = 1'-0"

3 MODULES

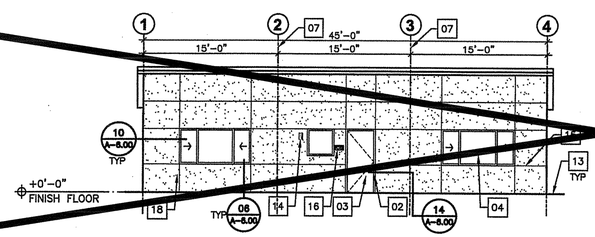

3 FRONT ELEVATION — SCALE: 1/8" = 1'-0"

4 REAR ELEVATION — SCALE: 1/8" = 1'-0"

4 MODULES

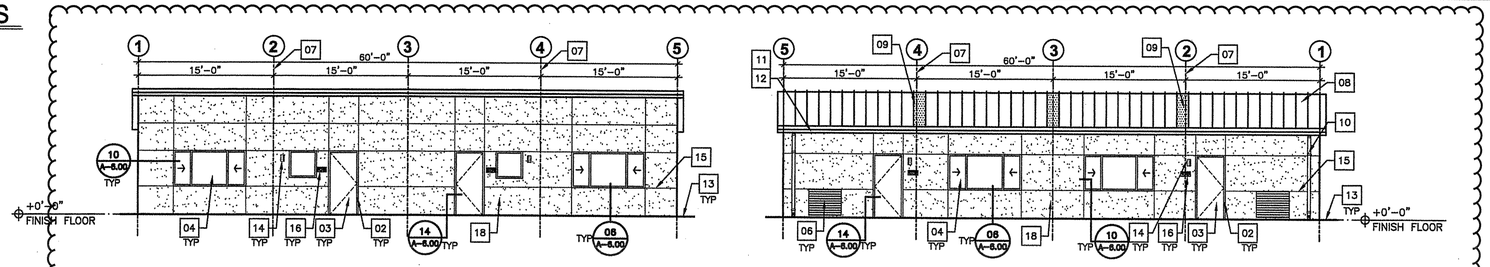

3 FRONT ELEVATION — SCALE: 1/8" = 1'-0"

4 REAR ELEVATION — SCALE: 1/8" = 1'-0"

5 MODULES

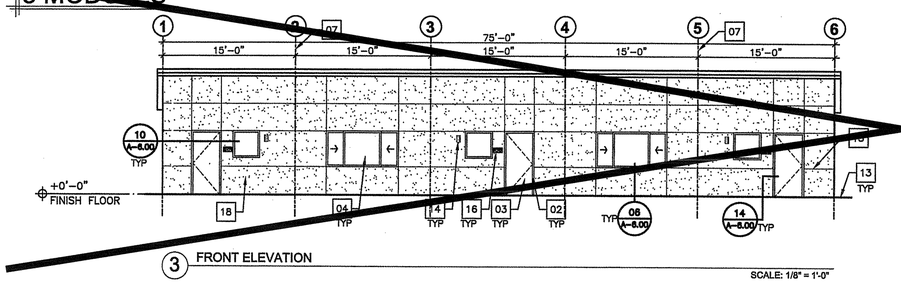

3 FRONT ELEVATION — SCALE: 1/8" = 1'-0"

4 REAR ELEVATION — SCALE: 1/8" = 1'-0"

KEYNOTES

01 ~~T-11 WOOD PANELS OVER 1/2" EXTERIOR DENS GLASS GOLD OVER PLYWOOD PER STRUCT.~~

02 ~~16 GAUGE PRESSED METAL FRAME WITH LOCK-IN ANCHORS~~ (14 A-6.00)

03 ~~1 3/4" THICK 18 GAUGE INSULATED METAL DOOR~~

04 ~~NAIL-IN ALUMINUM WINDOW ASSEMBLY - INSTALL OVER 6" WIDE BUILDING PAPER FLASHING WITH 8d @ 24" o.c.~~ (06 A-6.00) (10 A-6.00)

05 ~~NOT USED~~

06 ~~HVAC MAKEUP AIR AND DISCHARGE GRILLE~~

07 MODULE LINE

08 ~~26 GA STANDING SEAM METAL ROOFING~~

09 ~~FIELD INSTALL ROOF PANEL SHOWN SHADED~~

10 ~~26 GA DOWNSPOUT~~ (13 A-6.00) (09 A-6.00)

11 ~~26 GA GUTTER WITH CLOSED ENDS~~ (07 A-6.01)

12 ~~1 1/4" X 10" HARDBOARD FASCIA~~

13 ~~CONCRETE FLATWORK BY OTHERS~~

14 ~~ENERTRON 18OOL COMPACT FLUORESCENT LIGHT FIXTURE OR EQUAL.~~

15 ~~STUCCO CONTROL JOINT #1558x OR EQUAL- CONFORMS TO ASTM D1784-81~~ (11 A-6.00)

16 CBC COMPLIANT DOOR SIGN-LOCATE 4" MIN STRIKE SIDE OF DOOR JAMB PROVIDED AND INSTALLED BY OWNER (5 A-1.21)

17 ~~PLYWOOD PER STRUCTURAL WITH FACTORY APPLIED ELASTOMERIC COATING~~

18 ~~FACTORY APPLIED ELASTOMERIC STUCCO FINISH. COLOR TO BE SELECTED BY ARCHITECT.~~

FOR OTHERS, REFER TO A-3.04R

IDENTIFICATION STAMP
DIV. OF THE STATE ARCHITECT
02 117009
AC FLS SS
DATE 7/23/18

JTS MODULAR
DESIGN • BUILD • TRANSPORT • ENJOY

COMMERCIAL INSTITUTIONAL AND RESIDENTIAL MODULAR BUILDINGS DESIGN & PLANNING

7001 Mc Divitt Dr.
Bakersfield, CA 93313
Office: (661) 835-9270
Plant: (661) 833-2940
Fax: (661) 847-1007
www.jtsmodular.com

STRUCTURAL ENGINEER OF RECORD
ORION
Structural Engineering, Inc.
12257 OLD POMERADO ROAD, SUITE A
POWAY, CA 92064
PHONE (858) 679-1974
FAX (858) 679 1975

SOG-32
RE-LOCATABLE BUILDING PC

FILE: PC-JTS

IDENTIFICATION STAMP
DIV. OF THE STATE ARCHITECT
PRE CHECK (PC) DOCUMENT
CODE 2013 CBC
A SEPARATE PROJECT APPLICATION FOR CONSTRUCTION IS REQUIRED

APPROVALS

IDENTIFICATION STAMP
DIV. OF THE STATE ARCHITECT

FILE # PC-JTS
APPL. # 02-113899
AC F/LS SS
DATE 3/19/15

DATE

PROJECT 06-0140

PC

REGISTERED PROFESSIONAL ENGINEER
BRIAN J. ORR
No. S 4437
Exp. 12/31/18
STRUCTURAL
STATE OF CALIFORNIA

SHEET NAME
EXTERIOR ELEVATIONS
MONO SLOPE ROOF

SHEET NUMBER
A-3.04

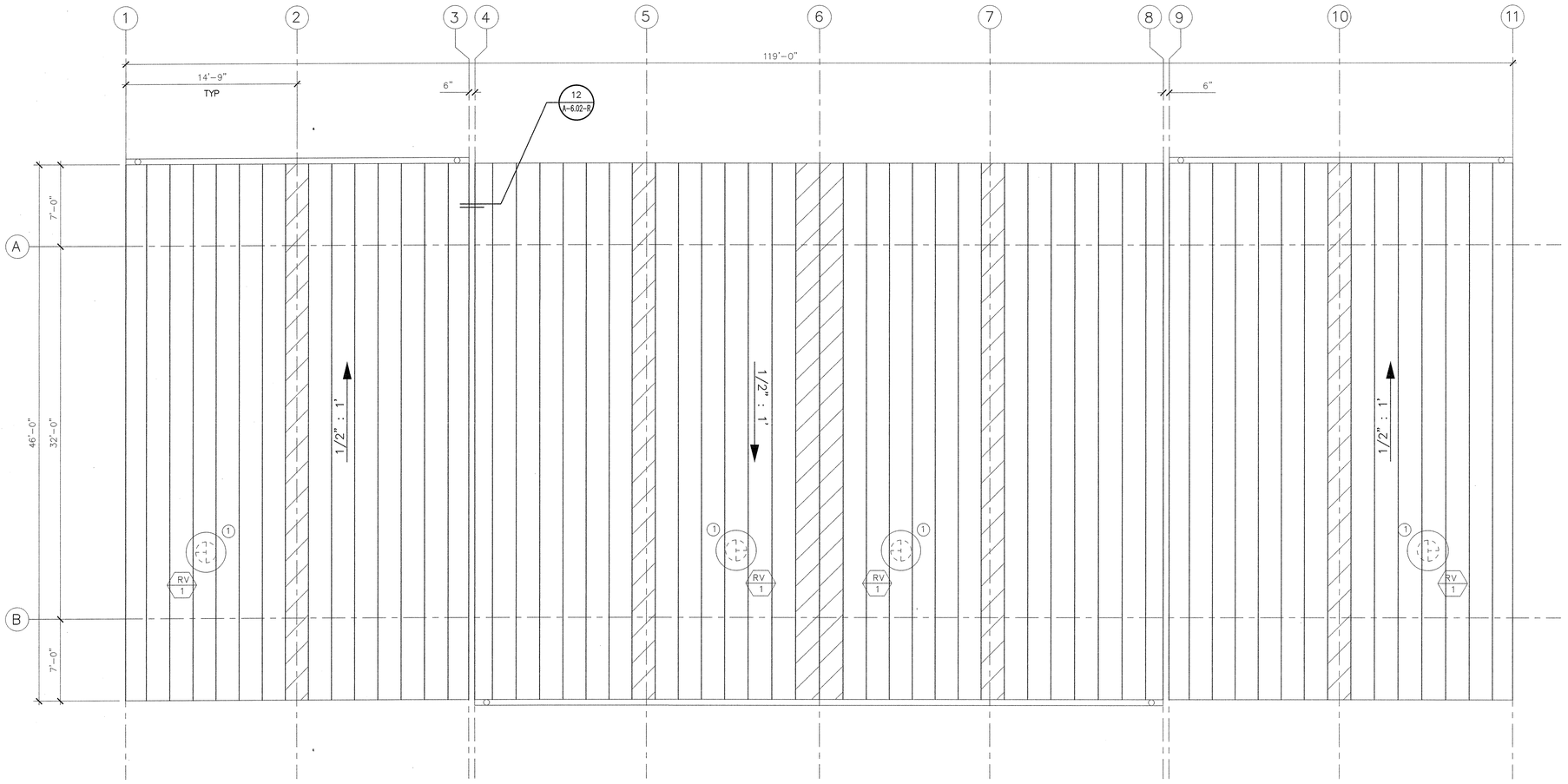

PLAN NORTH

ROOF PLAN

SCALE: 3/16" = 1"-0"

KEYNOTES [1]

REFER TO KEYNOTES ON A-4.00 (02-113899)

LEGEND

INDICATES FIELD INSTALLED PANEL

RV 1 — REFER TO SCHEDULE ON M-5.02 (02-113899)

(1) 12ØPRESS RELIEF DTR TO RELIEF CAP ROOF CAP MTG – SEE DETAIL 5/M55.01 ON PC 02-113899

NOTE: THIS SHEET REVISED A-4.00 OF (PC-02-113899)

FOR ADDITIONAL NOTES AND SECTION CUT CALL-OUTS REFER TO MONOSLOPE ROOF ON A-4.00 OF PC-02-113899

JTS MODULAR
DESIGN • BUILD • TRANSPORT • ENJOY
7001 MC Divitt DRIVE
BAKERSFIELD, CA 93313
WWW.JTSMODULAR.COM
OFFICE: (661) 835-9270

STRUCTURAL ENGINEER OF RECORD
ORION
Structural Engineering, Inc.
12257 OLD POMERADO ROAD, SUITE A
POWAY, CA 92064
PHONE (858) 679-1974
FAX (858) 679 1975

REGISTERED PROFESSIONAL ENGINEER
BRIAN J. OWEN
No. S 4429
EXP: 12/31/18
STRUCTURAL
STATE OF CALIFORNIA

NEW CLASSROOM BUILDING
MONSON - SULTANA ELEMENTARY SCHOOL
10643 AVENUE 416, DINUBA, CA 93618
MONSON - SULTANA JOINT UNION ELEMENTARY SCHOOL DISTRICT

IDENTIFICATION STAMP
DIVISION OF THE STATE ARCHITECT
CODE 2013 CBC

IDENTIFICATION STAMP
DIV. OF THE STATE ARCHITECT
02 117009
AC RS SS DT
DATE 7/23/18

JTS JOB#: 06-0246
DATE: 7/16/2018

ROOF PLAN

A-4.00-R

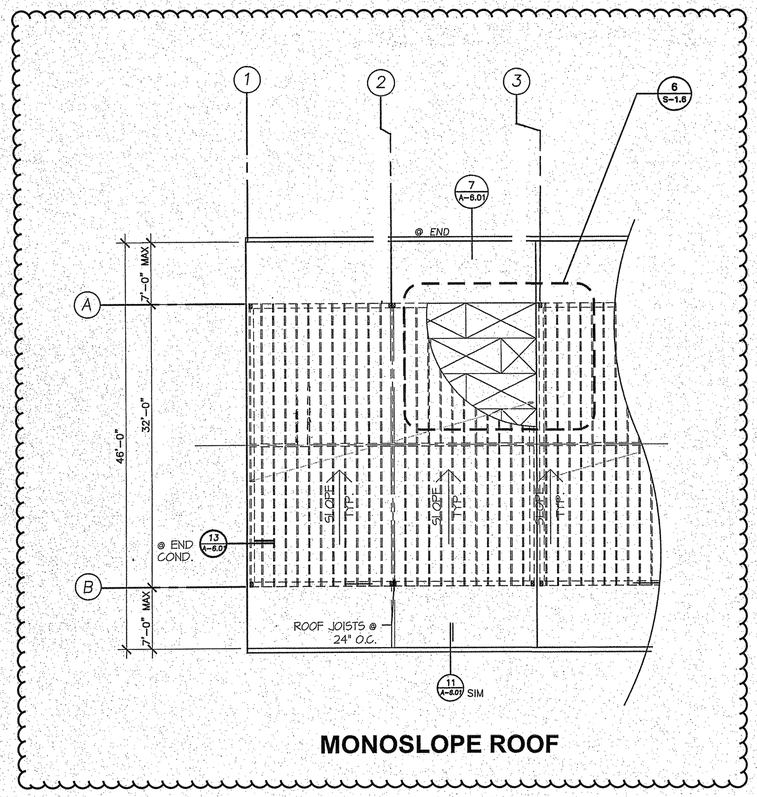

MONOSLOPE ROOF

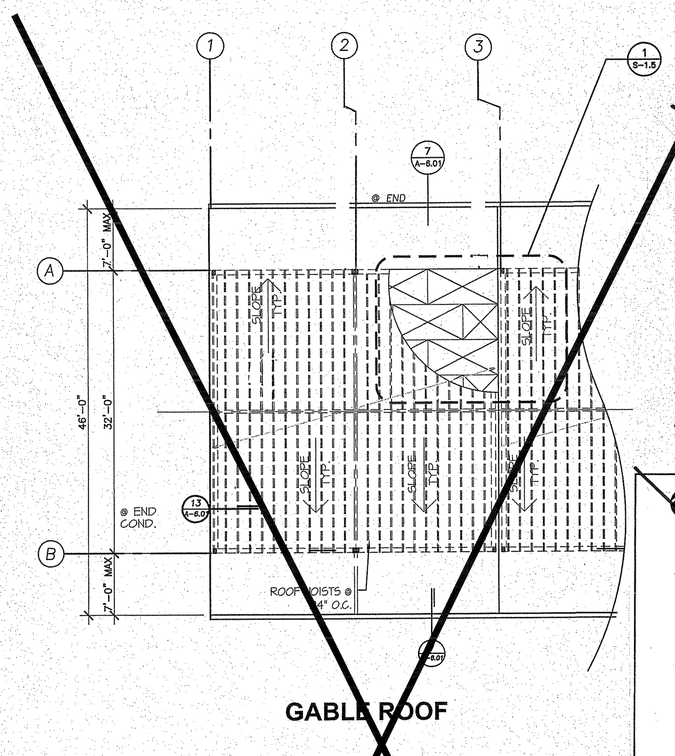

GABLE ROOF

Module/Model	Roof Area Area available for Solar Ready	Zone Area 18% of Col. B
2M	960	144
2M+RR	960	144
3M	1440	216
4M	1920	288
...	...	...
...	...	...
...	...	...
...	...	...
...	...	...
10M	4800	720

SOLAR ZONE TABLE

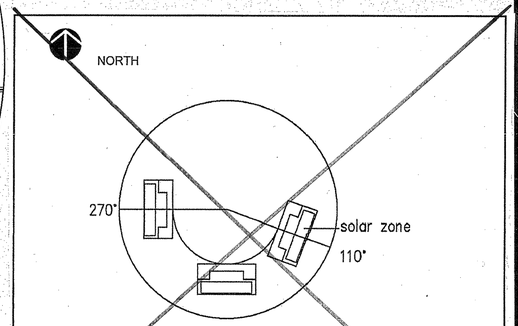

ROOF ORIENTATION DETAIL

Note: Roof orientation of the site-adapted Pre-Check (PC) design shall be oriented between 110 degrees and 270 degrees (as shown) in order to maintain allowable Solar Zone per 2013 Energy Code Section 110.1

Suggested Detail to be affix to PC plans to meet the Solar Ready requirements of 2013 Energy Code, Section 110.1

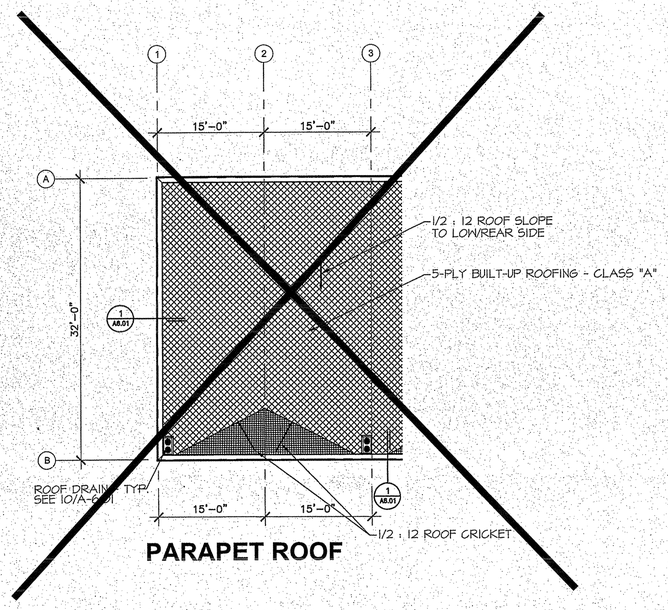

PARAPET ROOF

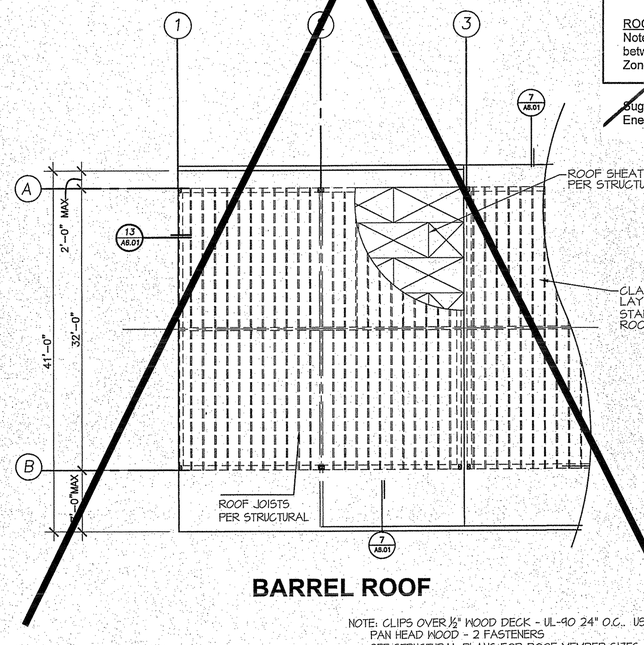

BARREL ROOF

NOTE: CLIPS OVER ½" WOOD DECK - UL-90 24" O.C.. USE # 10 x 1"
PAN HEAD WOOD - 2 FASTENERS
SEE STRUCTURAL PLANS FOR ROOF MEMBER SIZES.

IDENTIFICATION STAMP
DIV. OF THE STATE ARCHITECT
02 117009
AC FLS/LA SS
DATE 7/23/15

JTS MODULAR
DESIGN • BUILD • TRANSPORT • ENJOY

COMMERCIAL
INSTITUTIONAL
AND
RESIDENTIAL
MODULAR
BUILDINGS
DESIGN &
PLANNING

7001 Mc Divitt Dr.
Bakersfield, CA 93313
Office: (661) 835-9270
Plant: (661) 833-2940
Fax: (661) 847-1007
www.jtsmodular.com

STRUCTURAL ENGINEER OF RECORD
ORION
Structural Engineering, Inc.
12257 OLD POMERADO ROAD, SUITE A
POWAY, CA 92064
PHONE (858) 679-1974
FAX (858) 679 1975

SOG-32
RE-LOCATABLE
BUILDING PC

FILE: PC-JTS

IDENTIFICATION STAMP
DIV. OF THE STATE ARCHITECT
PRE CHECK (PC) DOCUMENT
CODE 2013 CBC
A SEPARATE PROJECT APPLICATION
FOR CONSTRUCTION IS REQUIRED

APPROVALS

IDENTIFICATION STAMP
DIV. OF THE STATE ARCHITECT

FILE # P.C.-JTS
APPL. # 02-113899
AC FLS SS
DATE 3/19/15

DATE

PROJECT 06-0140

PC

REGISTERED PROFESSIONAL ENGINEER
RYAN J. ORLER
No. S 4437
EXP. 12/31/16
STRUCTURAL
STATE OF CALIFORNIA

SHEET NAME

ROOFING PLANS

SHEET NUMBER

A-4.00

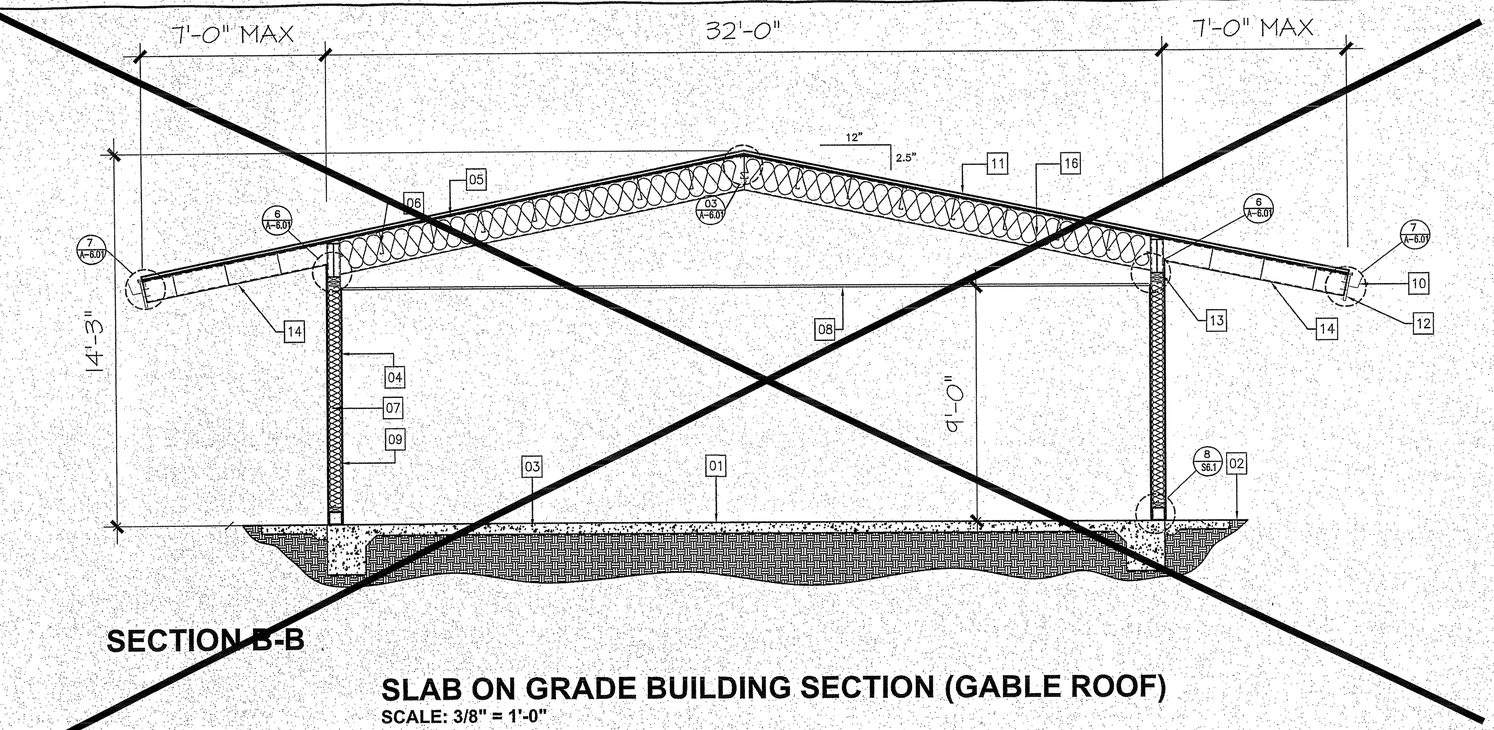

SECTION B-B

SLAB ON GRADE BUILDING SECTION (GABLE ROOF)

SCALE: 3/8" = 1'-0"

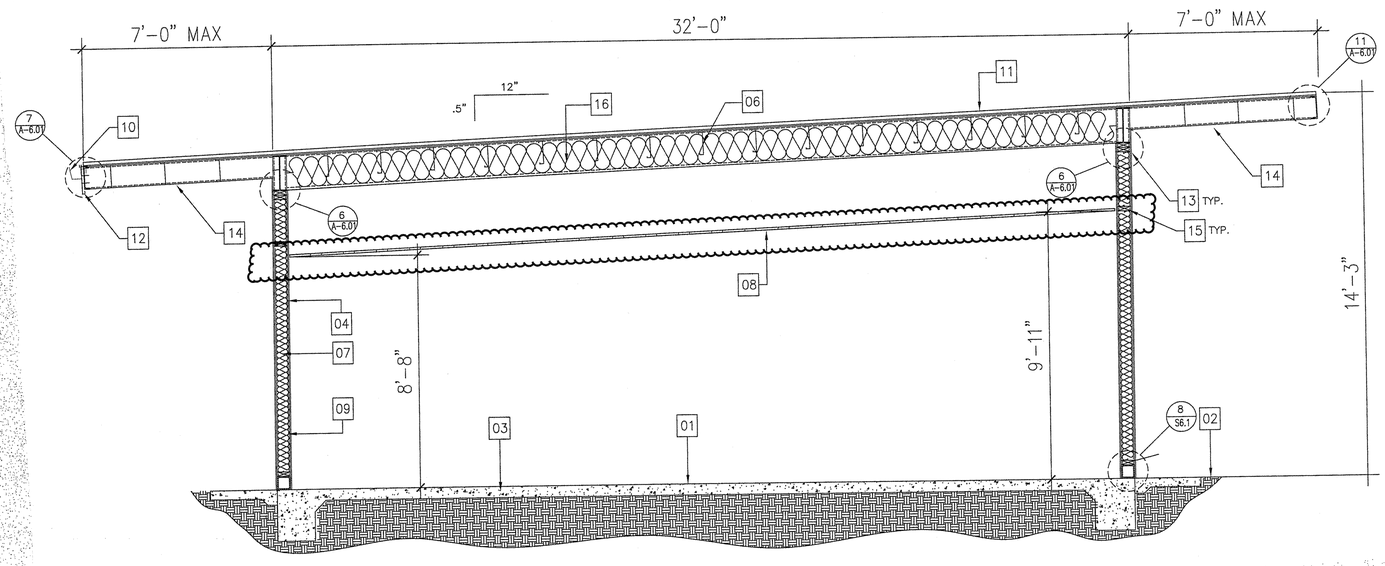

SECTION A-A

SLAB ON GRADE BUILDING SECTION (MONOSLOPE ROOF)

SCALE: 3/8" = 1'-0"

KEYNOTES

01. FLOOR LINE
02. NATURAL GRADE
03. SLAB ON GRADE
04. LIGHT GAUGE WALL STUD@ 16" O.C.
05. PLYWOOD ROOF SHEATHING
06. PURLIN @ 24" o.c. SEE STRUCTURAL FOR DETAILS
07. R-19 INSULATION AT EXT. WALLS
08. SUSPENDED ACOUSTICAL TILE TEE BAR CEILING SYSTEM
09. 1/2" VINYL COVERED WALLBOARD OVER 1/2" GYPSUM WALLBOARD
10. 26 GAUGE GALVANIZED STEEL GUTTER WITH CLOSED ENDS (SLOPE 1/8 INCH PER FOOT)
11. (24) GAUGE FACTORY FINISHED STANDING SEAM METAL ROOFING-INSTALL w/24 GAUGE STEEL PANEL CLIPS FURNISHED BY THE MANUFACTURER-ATTACH CLIPS @ 24" o.c. ALONG LEADING EDGE OF EACH PANEL w/ ONE #10x1" PANCAKE HEAD WOOD SCREW INTO ROOF SHEATHING-NEXT PANEL LOCKS OVER CLIP AND FIRST PANEL.
12. 1 1/4" x 11 1/2" HARDBOARD FASCIA
13. 26 GAUGE COUNTER-FLASHING CONTINUOUS-SECURE TO ROOF JOISTS @ 32" o.c. WITH #12 WOOD SCREWS AND GROMMETS
14. 1/2" DENS GLASS GOLD OVER1/2" PLYWOOD SOFFIT, ELASTOMERIC FINISH.
15. FIRE BLOCKING
16. R-38ROOF INSULATION

IDENTIFICATION STAMP
DIV. OF THE STATE ARCHITECT
02 I 17009
AC FLS SS
DATE 7/23/18

JTS MODULAR
DESIGN • BUILD • TRANSPORT • ENJOY

COMMERCIAL INSTITUTIONAL AND RESIDENTIAL MODULAR BUILDINGS DESIGN & PLANNING

7001 Mc Divitt Dr.
Bakersfield, CA 93313
Office: (661) 835-9270
Plant: (661) 833-2940
Fax: (661) 847-1007
www.jtsmodular.com

STRUCTURAL ENGINEER OF RECORD
ORION
Structural Engineering, Inc.
12257 OLD POMERADO ROAD, SUITE A
POWAY, CA 92064
PHONE (858) 679-1974
FAX (858) 679 1975

SOG-32
RE-LOCATABLE
BUILDING PC

FILE: PC-JTS

IDENTIFICATION STAMP
DIV. OF THE STATE ARCHITECT
PRE CHECK (PC) DOCUMENT
CODE 2013 CBC
A SEPARATE PROJECT APPLICATION
FOR CONSTRUCTION IS REQUIRED

APPROVALS

IDENTIFICATION STAMP
DIV. OF THE STATE ARCHITECT

FILE # PC-JTS
APPL # 02-113899
AC FLS SS
DATE 3/19/15

DATE

PROJECT 08-0140

PC

REGISTERED PROFESSIONAL ENGINEER
BRIAN J. ORTH
No. S 4437
EXP. 12/31/16
STRUCTURAL
STATE OF CALIFORNIA

SHEET NAME

BUILDING SECTIONS

SHEET NUMBER

A-5.00

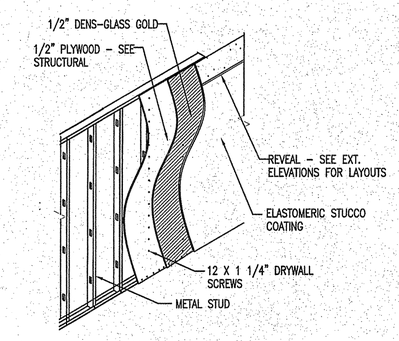

15 CUT-AWAY SECTION-EXTERIOR WALL

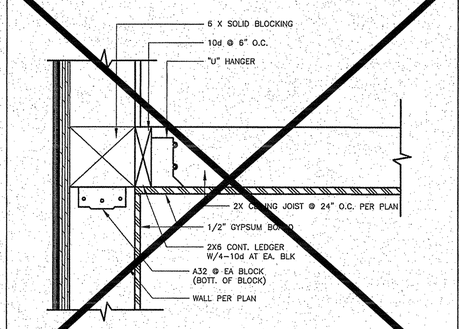

11 HARD LID CEILING -OPTIONAL

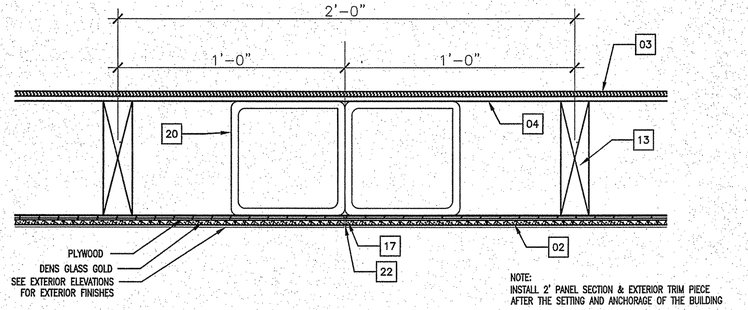

04 MODULE ACCESS PANEL

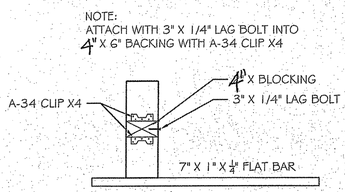

14 CLIP DETAIL

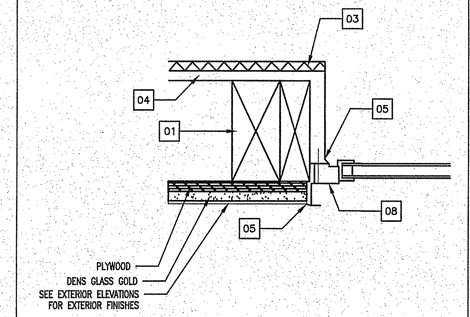

10 EXTERIOR WINDOW JAMB

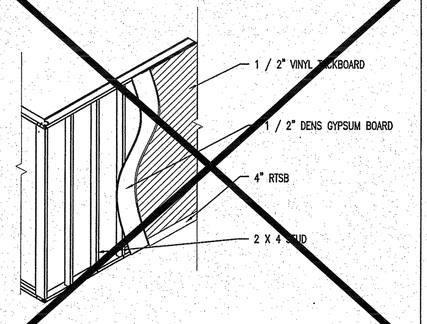

07 CUT-AWAY SECTION - INTERIOR WALL

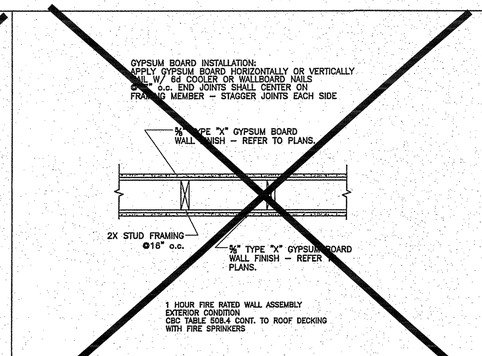

03 1-HOUR WALL CONSTRUCTION

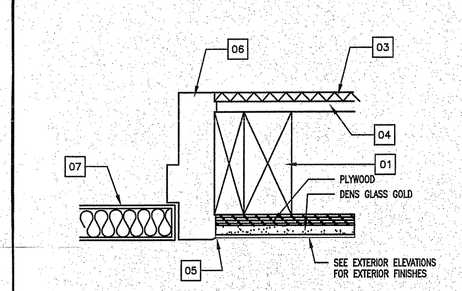

13 EXTERIOR DOOR JAMB

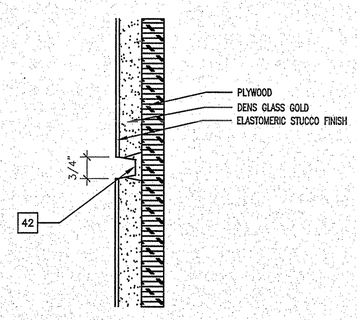

09 ELASTOMERIC JOINT

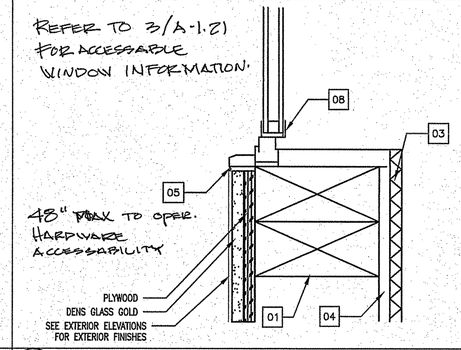

06 EXTERIOR WINDOW SILL

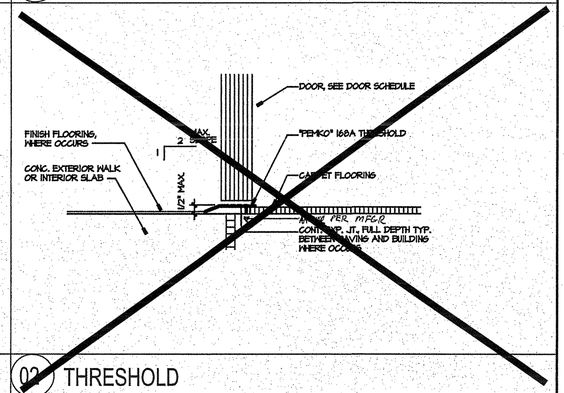

02 THRESHOLD

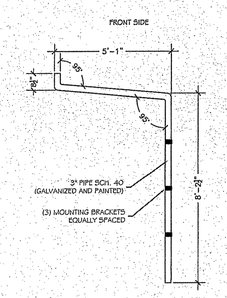

12 FRONT SIDE DOWNSPOUT DETAIL

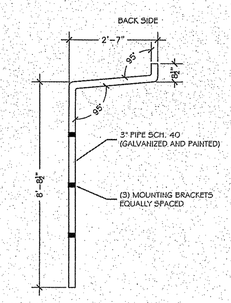

08 BACK SIDE DOWNSPOUT DETAIL

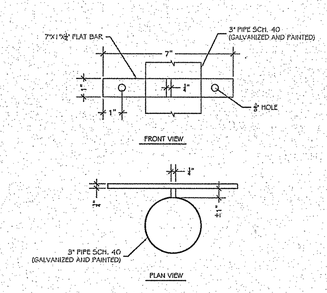

05 PLAN VIEW DOWNSPOUT DETAIL

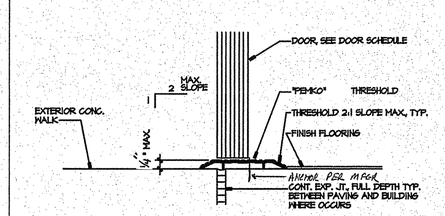

01 THRESHOLD

IDENTIFICATION STAMP
DIV. OF THE STATE ARCHITECT
O2 117009
AC FLSH SS
DATE 7/23/18

KEYNOTES

NOT ALL KEYNOTES APPLY TO THIS SHEET

01. 2 x 6 POST AND TRIMMER STUD
02. 1/2" DENS GLASS GOLD OVER 1/2" PLYWOOD
03. 1/2" VINYL COVERED TACKBOARD
04. 1/2" GYPSUM WALLBOARD
05. CONTINUOUS BEAD OF WATERPROOF SEALANT
06. 16 GAUGE PRESSED METAL FRAME WITH LOCK-IN ANCHORS
07. 1 3/4" THICK 18 GAUGE INSULATED METAL DOOR
08. NAIL-IN ALUMINUM WINDOW ASSEMBLY - INSTALL OVER 6" WIDE BUILDING PAPER FLASHING WITH 8d @ 24" o.c.
09. NOT USED
10. 3/4" LAMINATED PLASTIC CASING
11. PLYWOOD PER STRUCTURAL WITH FACTORY APPLIED ELASTOMERIC COATING.
12. NOT USED
13. 2 X 6 STUDS @ 16" o.c.
14. NOT USED
15. NOT USED
16. NOT USED
17. METAL CASING TRIM
18. NOT USED
19. EXPANDED METAL VENTILATING CLOSURE SCREEN-SECURE TO BUILDING WITH #12 WOOD SCREWS AND GROMMETS @ 24" o.c. EA SIDE
20. 6 X 6 TUBE STEEL @ MODULE LINE, SEE STRUCTURAL.
21. NOT USED
22. CONTINUOUS BEAD OF WATERPROOF SEALANT
23. 26 GA STANDING SEAM METAL ROOFING
24. FIELD INSTALL ROOF PANEL
25. NOT USED
26. NOT USED
27. 26 GA DOWNSPOUT 4" ø MIN.
28. NOT USED
29. 26 GA GUTTER WITH CLOSED ENDS
30. HARDBOARD FASCIA
31. NOT USED
32. NOT USED
33. NOT USED
34. NOT USED
35. NOT USED
36. NOT USED
37. NOT USED
38. NOT USED
39. NOT USED
40. ENTERON 7800L COMPACT FLUORESCENT LIGHT FIXTURE.
41. NOT USED
42. ELASTOMERIC STUCCO CONTROL JOINT PRE MANUFACTURED
43. NOT USED
44. NOT USED
45. NOT USED

JTS MODULAR
DESIGN • BUILD • TRANSPORT • ENJOY

COMMERCIAL INSTITUTIONAL AND RESIDENTIAL MODULAR BUILDINGS DESIGN & PLANNING

7001 Mc Divitt Dr.
Bakersfield, CA 93313
Office: (661) 835-9270
Plant: (661) 833-2940
Fax: (661) 847-1007
www.jtsmodular.com

STRUCTURAL ENGINEER OF RECORD
ORION
Structural Engineering, Inc.
12257 OLD POMERADO ROAD, SUITE A
POWAY, CA 92064
PHONE (858) 679-1974
FAX (858) 679 1975

SOG-32
RE-LOCATABLE BUILDING PC

FILE: PC-JTS

IDENTIFICATION STAMP
DIV. OF THE STATE ARCHITECT
PRE CHECK (PC) DOCUMENT
CODE 2013 CBC
A SEPARATE PROJECT APPLICATION FOR CONSTRUCTION IS REQUIRED

APPROVALS

IDENTIFICATION STAMP
DIV. OF THE STATE ARCHITECT

FILE # PC-JTS
APPL # 02-113899
AC FLSH/LS SS
DATE 3/19/15

DATE
PROJECT 06-0140

PC

REGISTERED PROFESSIONAL ENGINEER
ALAN I. OBER
No. S 4432
EXP. 12/31/18
STRUCTURAL
STATE OF CALIFORNIA

SHEET NAME
DETAILS

SHEET NUMBER
A-6.00

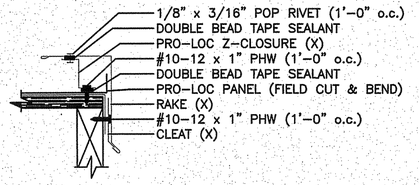

13 RAKE FORMED

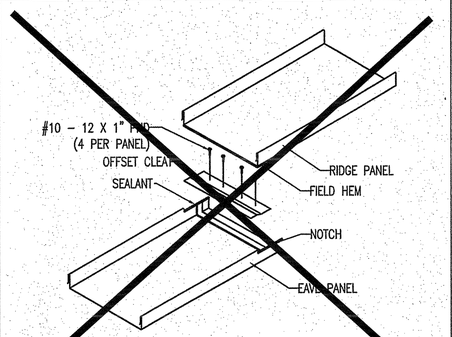

08 ENDLAP

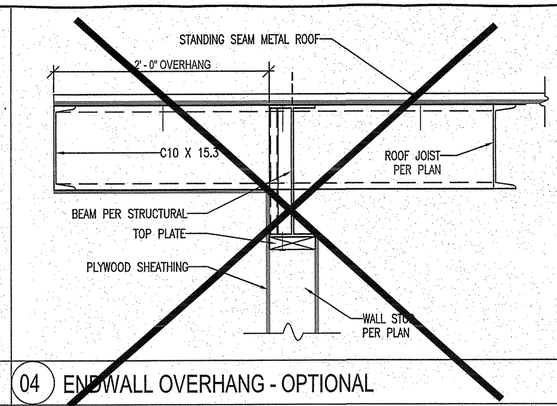

04 ENDWALL OVERHANG - OPTIONAL

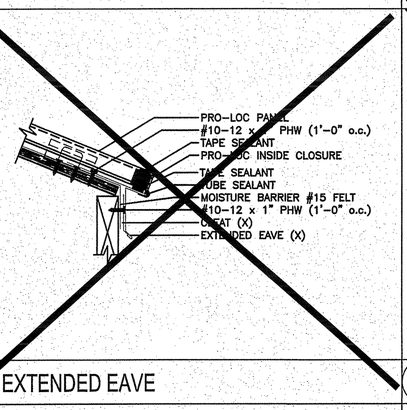

11 EXTENDED EAVE

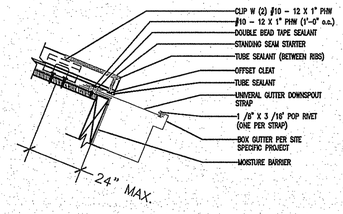

07 GUTTER DETAIL

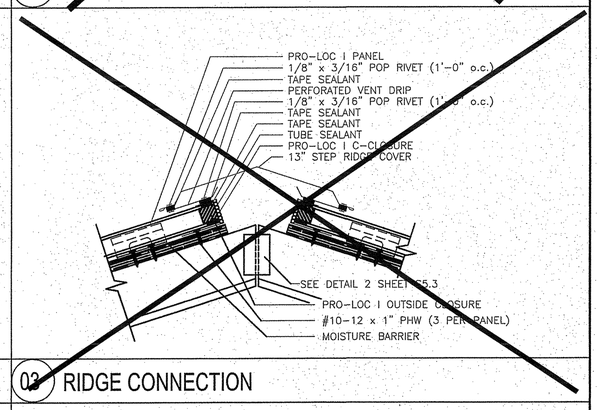

03 RIDGE CONNECTION

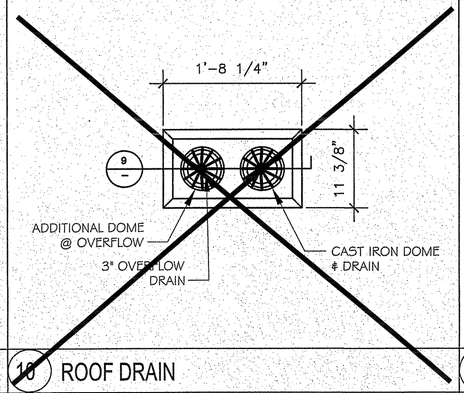

10 ROOF DRAIN

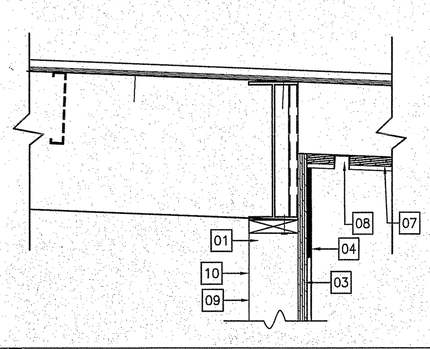

06 EAVE VENT

VERTICAL SEAM PANEL CLIP clips are placed alongthe male leg of each panel prior to installing adjacent panel. Design wind uplift must be considered for proper clip spacing.



VERTICAL SEAM CLIP

VERTICAL SEAM UL-90 CLIP
2 fasteners required

APPLICATION	INSTALLATION REQUIREMENTS		CLIP SPACING	TYPE OF FASTENER	# REQ'D.
CLIPS OVER ½" WOOD DECK	UL-90	22 GAUGE	24" O.C.	#10 X 1" PANCAKE HEAD WOOD	2 FASTNRS
	UL-90	24 GAUGE	24" O.C.	#10 X 1" PANCAKE HEAD WOOD	2 FASTNRS
	UL-90	24 GAUGE	24" O.C.	#10 X 1" PANCAKE HEAD WOOD	2 FASTNRS

02 VERTICAL SEAM SPECIFICATIONS

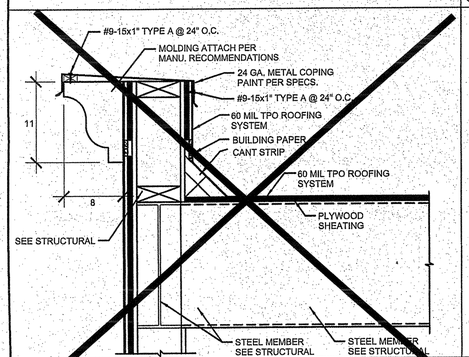

14 PARAPET (OPTIONAL)

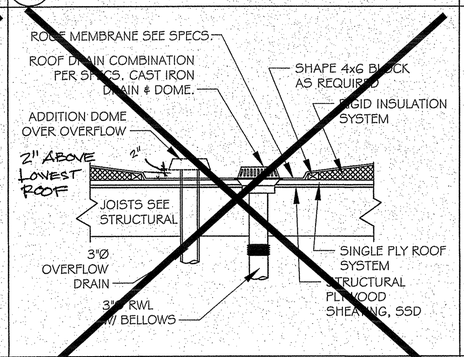

09 ROOF DRAIN

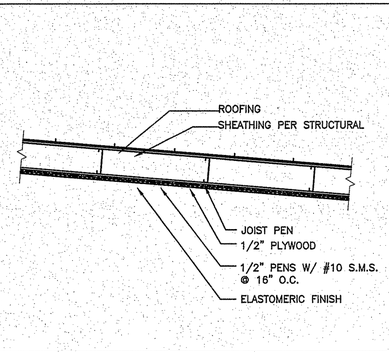

05 OVERHANG DETAIL

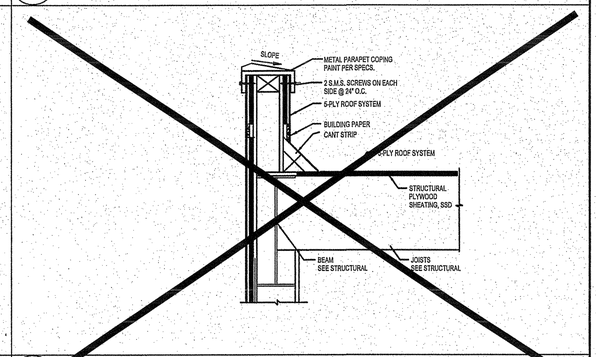

01 PARAPET

KEYNOTES

01. 2 X 6 WALL STUD @ 16" O.C.
02. DOUBLE 2X6 TOP PLATE
03. 1/2" WALL PLYWOOD SHEATHING PER PLANS.
04. ELASTOMERIC STUCCO OR WOOD SIDING
05. 2X6 BLOCKING
06. NOT USED
07. 1/2" DENS GLASS GOLD OVER PLYWOOD UNDER EAVE
08. 2" WIDE VENT SCREEN- SECURE TO EACH ROOF JOIST w/ #10 WOOD SCREWS
09. 1/2" VINYL COVERED TACKBOARD
10. 1/2" GYPSUM WALLBOARD
11. 2 X 6 STUDS @ 16" o.c.

JTS MODULAR
DESIGN • BUILD • TRANSPORT • ENJOY

COMMERCIAL INSTITUTIONAL AND RESIDENTIAL MODULAR BUILDINGS DESIGN & PLANNING

7001 Mc Divitt Dr.
Bakersfield, CA 93313
Office: (661) 835-9270
Plant: (661) 833-2940
Fax: (661) 847-1007
www.jtsmodular.com

STRUCTURAL ENGINEER OF RECORD
ORION
Structural Engineering, Inc.
12257 OLD POMERADO ROAD, SUITE A
POWAY, CA 92064
PHONE (858) 679-1974
FAX (858) 679 1975

SOG-32
RE-LOCATABLE BUILDING PC

FILE: PC-JTS

IDENTIFICATION STAMP
DIV. OF THE STATE ARCHITECT
PRE CHECK (PC) DOCUMENT
CODE 2013 CBC
A SEPARATE PROJECT APPLICATION
FOR CONSTRUCTION IS REQUIRED

APPROVALS

IDENTIFICATION STAMP
DIV. OF THE STATE ARCHITECT

FILE # PC-JTS
APPL. # 02-113899
AC APPR'S. MC SS DRP
DATE 3/19/15

DATE
PROJECT 06-0140

PC

REGISTERED PROFESSIONAL ENGINEER
ALAN J. ORION
No. S 4432
EXP. 12/31/16
STRUCTURAL
STATE OF CALIFORNIA

SHEET NAME
DETAILS

SHEET NUMBER
A-6.01

IDENTIFICATION STAMP
DIV. OF THE STATE ARCHITECT
02 117009
AC APPR'S SS
DATE 7/23/18

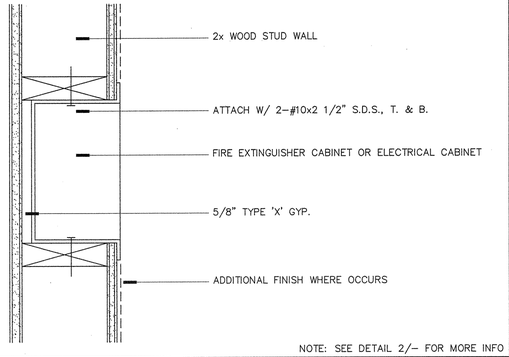

01 SEMI-RECESSED FIRE EXTINGUISHER

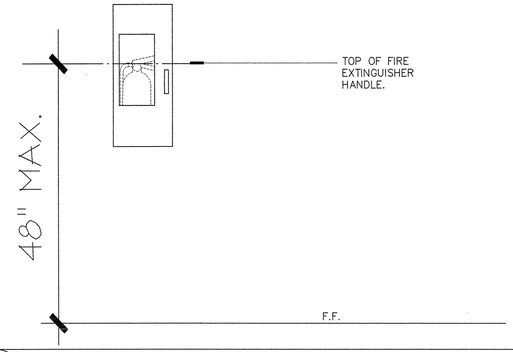

02 FIRE EXTINGUISHER ELEVATION

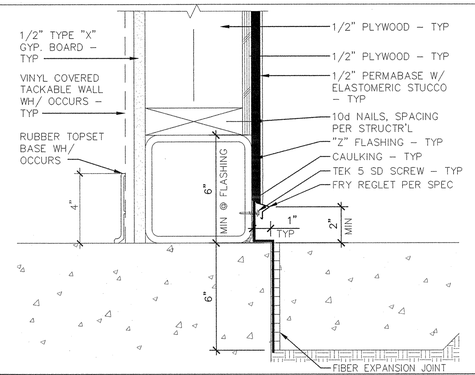

03 PERIMETER FLASHING W/ REGLET SCALE: 3"=1'-0"

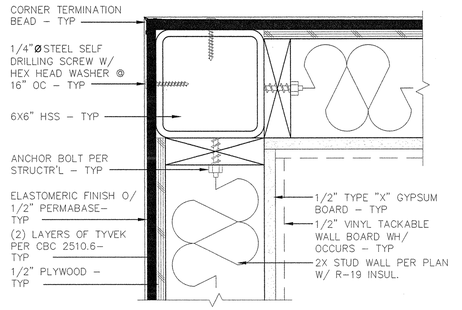

04 ELASTOMERIC JOINT @ MODLINE SCALE: 3"=1'-0"

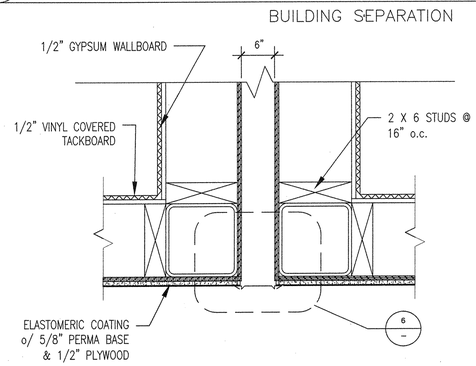

05 EXTERIOR WALL SEISMIC JOINT

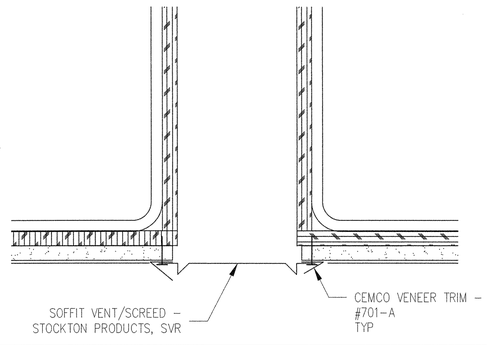

06 SEISMIC JOINT - ENLARGED DETAIL

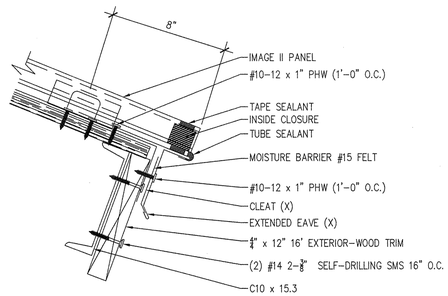

NOTE: EXTERIOR TRIM SHALL BE "TRUWOOD" REVERSIBLE TRIM OR EQUAL

07 EXTENDED EAVE - PLUMB CUT

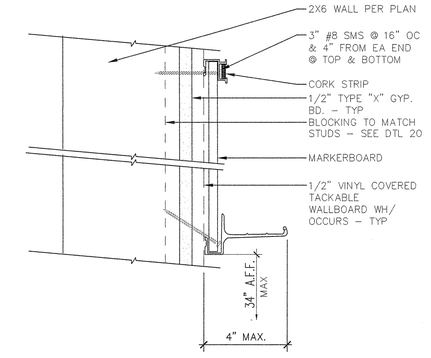

08 MARKERBOARD ATTACHMENT

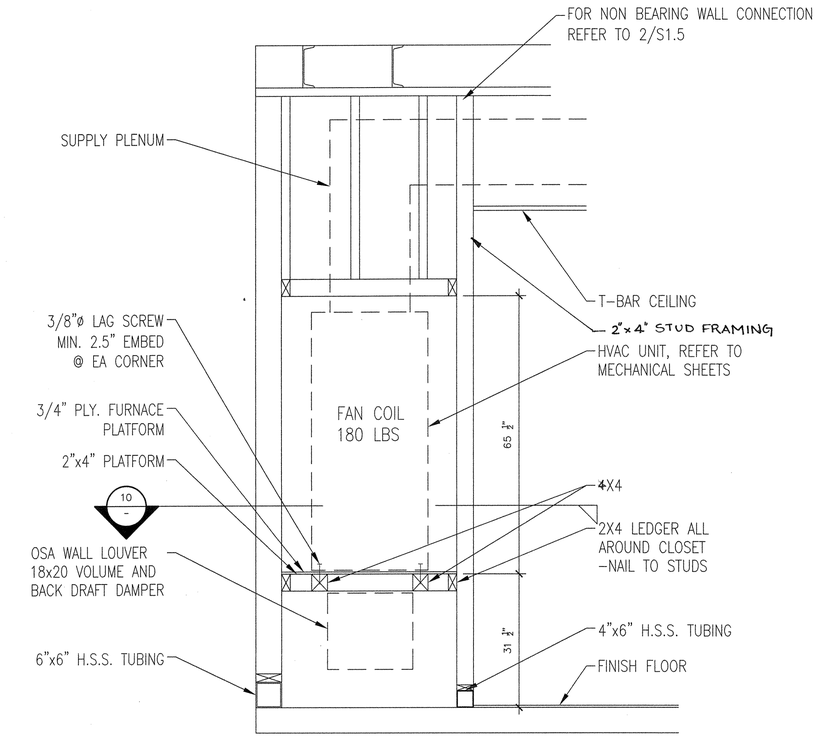

09 VERTICLE AIR HANDLER

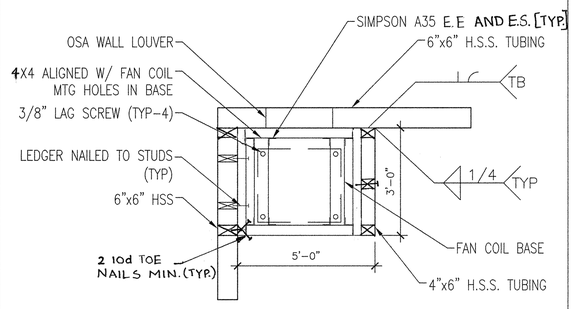

10 V.A.H. PLATFORM

11

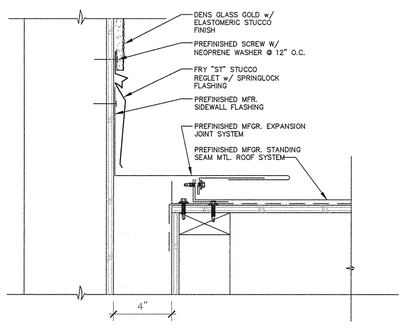

12 EXPANSION JOINT COVER 3" = 1'-0"

13

JTS MODULAR
DESIGN • BUILD • TRANSPORT • ENJOY
7001 MC Divitt DRIVE
BAKERSFIELD, CA 93313
WWW.JTSMODULAR.COM
OFFICE: (661) 835-9270

STRUCTURAL ENGINEER OF RECORD
ORION
Structural Engineering, Inc.
12257 OLD POMERADO ROAD, SUITE A
POWAY, CA 92064
PHONE (858) 679-1974
FAX (858) 679 1975

REGISTERED PROFESSIONAL ENGINEER
BRIAN J. OMER
No. S 4439
EXP. 12/31/18
STRUCTURAL
STATE OF CALIFORNIA

NEW CLASSROOM BUILDING
MONSON - SULTANA ELEMENTARY SCHOOL
10643 AVENUE 416, DINUBA, CA 93618
MONSON - SULTANA JOINT UNION ELEMENTARY SCHOOL DISTRICT

IDENTIFICATION STAMP
DIVISION OF THE STATE ARCHITECT
CODE 2013 CBC

IDENTIFICATION STAMP
DIV. OF THE STATE ARCHITECT
02 11 7009
AC FLS SS 07
DATE 7/23/18

JTS JOB#: 06-0246
DATE: 7/16/2018

DETAILS

A-6.02-R

CONCRETE:

1. ALL CONCRETE WORK SHALL CONFORM TO ALL REQUIREMENTS OF THE 2013 C.B.C. AND THE A.C.I. 318.11 "SPECIFICATIONS FOR STRUCTURAL CONCRETE FOR BUILDINGS", AND PCI MANUAL MNL-116-A LATEST EDITION FOR QUALITY CONTROL FOR PLANTS AND PRODUCTION OF STRUCTURAL PRECAST CONCRETE PRODUCTS WITH AN ARCHITECTURAL FINISH.
2. SLAB AND FOUNDATION CONCRETE SHALL BE 150 P.C.F. HARDROCK, MIXED PER A.S.T.M. C-94, AND SHALL HAVE A MINIMUM COMPRESSIVE STRENGTH OF 4,000 P.S.I. AT 28 DAY. EXCEPT AS NOTED PER A.C.I. 318-11, SECTION 4.3.
3. THE MAXIMUM SIZE AGGREGATE IN FOUNDATION AND MASS CONCRETE WORK SHALL BE 1 INCH. THE MAXIMUM SIZE AGGREGATE IN SLABS ON GRADE, WALLS SHALL BE 3/4 INCH. ALL OTHER CONCRETE SHALL BE 3/4 INCH.
4. CEMENT SHALL CONFORM TO A.S.T.M.. C-150, TYPE V, LOW ALKALI. AGGREGATES FOR NORMAL WEIGHT SHALL CONFORM TO A.S.T.M. C-33.
5. ADMIXTURES AND COLORS (EXCEPT AS NOTED HEREIN) SHALL NOT BE USED UNLESS SUBSTANTIATING DATA IS SUBMITTED TO AND ACCEPTED BY THE ENGINEER AND ARCHITECT OF RECORD AND DSA.
6. CONCRETE MIXES SHALL BE DESIGNED BY A QUALIFIED TESTING LABORATORY. THE MIX DESIGNS SHALL CONFORM TO C.B.C. SEC. 1905A. UNLESS NOTED OTHERWISE.
7. NON-STRUCTURAL STEEL EMBEDDED IN CONCRETE SHALL BE GALVANIZED OR PAINTED. ALL DAMAGED GALVANIZED AREAS SHALL BE REPAIRED PRIOR TO EMBEDMENT.
8. PROVIDE 1- #5 DIAGONAL BARS AT CORNERS OF WALL, FLOOR, AND ROOF OPENINGS AND INSIDE CORNERS OF FLOORS.
9. READY MIXED CONCRETE SHALL CONFORM TO (A.S.T.M. C-94).
10. PLACEMENT OF CONCRETE SHALL CONFORM THE 2013 C.B.C. AND THE TO A.C.I. 304. CLEAN AND ROUGHEN TO BY REMOVING THE ENTIRE SURFACE AND EXPOSING CLEAN AGGREGATE SOLIDLY EMBEDDED IN THE MORTAR MATRIX AGAINST ALL CONCRETE SURFACES AGAINST WHICH CONCRETE IS TO BE POURED.
11. ALL EXPOSED CONCRETE SHALL HAVE A SMOOTH FORM FINISH USING B-B PLYFORM, CLASS I, EXT-A.P.A. PLYWOOD.
12. ALL SLABS SHALL HAVE A TROWELED FINISH EXCEPT AS NOTED ON THE DRAWINGS.
13. ALL REINFORCING STEEL, ANCHOR BOLTS, DOWELS AND INSERTS SHALL BE WELL SECURED IN POSITION PRIOR TO PLACING CONCRETE.
14. IF THE CONTRACTOR DESIRES TO MAKE ANY CONSTRUCTION JOINTS OTHER THAN THOSE SHOWN ON THESE DRAWINGS, HE SHALL SUBMIT DETAILS OF CHANGES TO THE ENGINEER OF RECORD FOR REVIEW BEFORE STARTING WORK AND THE ENGINEER OF RECORD TO OBTAIN DSA APPROVAL PRIOR TO STARTING WORK.
15. NO BRICK OR POROUS MATERIAL SHALL BE USED TO SUPPORT FOUNDATION STEEL OFF THE GROUND.
16. PROVIDE 1/2 INCH CHAMFER ON ALL EXPOSED CONCRETE CORNERS, U.N.O.
17. MINIMUM CONCRETE COVERAGES

FOOTINGS CAST AGAINST EARTH	3"
FORMED CONCRETE EXPOSED TO EARTH OR WEATHER	2"
BEAMS AND GIRDERS	1 1/2"
WALLS	3/4"
COLUMN TIES	3/4"
SLABS (#11 AND SMALLER)	3/4"

CONCRETE CURING:
A) SLAB AND FDN; TYPICALLY REQUIRED FOR 10 DAYS TO ACHIEVE A MINIMUM OF 2500 PSI STRENGTH PRIOR TO INSTALLATION OF OTHER MAJOR STRUCTURAL COMPONENTS.

FOUNDATION:

1. THIS P.C. IS DESIGN TO THE C.B.C. MINIMUM. WHERE SOIL REPORT ARE AVAILABLE; ATTACH ONE COPY OF SOILS REPORT TO THE APPROVED SET OF CONSTRUCTION DOCUMENTS. SOILS REPORT SHALL BE PART OF THESE NOTES. PRIOR TO THE POURING OF CONCRETE AND PRIOR TO THE CONTRACTOR REQUESTING A DSA FOUNDATION INSPECTION, THE GEOTECHNICAL ENGINEER SHALL INSPECT AND APPROVE THE FOOTING EXCAVATIONS. HE SHALL POST NOTICE ON THE JOB SITE AND ADVISE THE DSA INSPECTOR IN WRITING THAT THE WORK SO INSPECTED MEETS THE CONDITIONS OF THE REPORT. A WRITTEN CERTIFICATION TO VERIFY THAT:
   A. THE BUILDING PAD WAS PREPARED IN ACCORDANCE WITH THE SOIL REPORT.
   B. THE UTILITY TRENCHES HAVE BEEN PROPERLY BACKFILLED AND COMPACTED, AND
   C. THE FOUNDATION EXCAVATIONS COMPLY WITH THE INTENT OF THE SOILS REPORT.
2. SOIL REMOVAL AND RECOMPACTION SHALL BE DONE PER SOILS REPORT RECOMMENDATIONS UNDER GEOTECHNICAL ENGINEER'S SUPERVISION AND INSPECTION.
3. TYPE OF FOOTING:
   A. SHALLOW FOOTING SYSTEM MINIMUM EMBEDMENT 18" BELOW LOWEST ADJACENT GRADE.
   DESIGN SOIL PRESSURE:

FOOTING TYPE	STATIC BEARING PRESSURE
SPREAD FOOTING	1,500
CONTINUOUS FOOTING	1,500

4. SLAB BASE AND COMPACTION TO BE IN ACCORDANCE WITH SOILS REPORT.
5. NO PIPES OR DUCTS SHALL BE PLACED IN SLABS OR WALLS UNLESS SPECIFICALLY DETAILED AND APPROVED BY THE ENGINEER AND DSA.
6. FOR ALL DIMENSIONS, CURBS, SLAB DEPRESSIONS, STEPS, FLOOR DRAINS, FLOOR SINKS, TRENCHES, UNDER FLOOR DUCTS AND CONDUITS, SEE ARCHITECTURAL, MECHANICAL, AIR CONDITIONING, PLUMBING, AND ELECTRICAL DRAWINGS, TRENCH BACKFILL AS PER SOILS REPORT REQUIREMENTS.
7. ALL ABANDONED FOOTINGS, UTILITIES, ETC., THAT INTERFERE WITH NEW CONSTRUCTION SHALL BE REMOVED.
8. THE CONTRACTOR SHALL DETERMINE THE LOCATION OF UTILITY SERVICES IN AREAS TO BE EXCAVATED BEFORE BEGINNING EXCAVATION. EXERCISE EXTREME CAUTION IN EXCAVATING AND TRENCHING. DAMAGE CAUSED AS A RESULT OF FAILING TO EXACTLY LOCATE AND PRESERVE ALL EXISTING UNDERGROUND UTILITIES IS THE RESPONSIBILITY OF THE CONTRACTOR.
9. THE CONTRACTOR SHALL PROVIDE FOR THE DESIGN, APPROVALS, PERMITS, INSTALLATION AND MONITORING OF ALL CRIBBING, SHEATHING AND SHORING REQUIRED TO SAFELY RETAIN TEMPORARY EXCAVATIONS.
10. ALL PLANTERS IN CLOSE PROXIMITY TO THE STRUCTURE SHALL HAVE ADEQUATE DRAINAGE OF SURFACE WATER TO PREVENT SATURATION OF SOIL UNDER FOUNDATION.
11. 2013 C.B.C. SEISMIC SITE CLASS A, B, C, D AND E (SECTION 1613A.3.2)

GENERAL NOTES:

1. THE PROJECT SPECIFICATIONS SHALL BE PART OF THE CONTRACT DOCUMENTS.
2. THE STRUCTURAL DRAWINGS ARE TO BE USED IN CONJUNCTION WITH ARCHITECTURAL DRAWINGS.
3. THE CONTRACTOR SHALL REVIEW EXISTING CONDITIONS ON THE SITE DURING THE BIDDING. THE CONTRACTOR SHALL VERIFY ALL DIMENSIONS PRIOR TO STARTING WORK. THE ARCHITECT AND ENGINEER SHALL BE NOTIFIED OF ANY DISCREPANCIES OR INCONSISTENCIES PRIOR TO PROCEEDING.
4. ALL PHASES OF WORK ARE TO CONFORM TO THE MINIMUM STANDARDS OF THE CALIFORNIA BUILDING CODE (2013 EDITION C.B.C.), RELATED CALIFORNIA BUILDING CODE STANDARDS, AND ANY A.S.T.M. SPECIFICATIONS ON WHICH THESE STANDARDS ARE BASED. WHERE CONFLICT BETWEEN BUILDING CODES AND SPECIFICATIONS OCCURS, THE MOST STRINGENT REQUIREMENTS SHALL GOVERN.
5. ALL A.S.T.M. DESIGNATIONS REFERRED TO ON THESE DRAWINGS SHALL BE THE LATEST ADOPTED OR REVISED SPECIFICATION, AS OF THE DATE OF THESE DRAWINGS.
6. ALL DIMENSIONS SHALL TAKE PRECEDENCE OVER SCALE SHOWN ON PLANS, SECTIONS AND DETAILS. DRAWINGS SHALL NOT BE SCALED FOR CONSTRUCTION PURPOSES.
7. NOTES AND DETAILS ON THE DRAWINGS SHALL TAKE PRECEDENCE OVER GENERAL NOTES AND TYPICAL DETAILS.
8. THE STRUCTURAL DRAWINGS SHOW ONLY THE BASIC STRUCTURAL REQUIREMENTS. REFER TO CIVIL, ARCHITECTURAL, MECHANICAL, PLUMBING, AND ELECTRICAL DRAWINGS FOR NON-STRUCTURAL ITEMS, SUCH AS:
   A. SIZE AND LOCATION OF ALL OPENINGS.
   B. SIZE AND LOCATION OF ALL NON-BEARING WALLS.
   C. SIZE AND LOCATION OF ALL CONCRETE CURBS, WALKS, ROOF AND FLOOR DRAINS, SLOPES, DEPRESSED SLAB AREAS, ETC.
   D. FLOOR, ROOF AND WALL FINISHES.
   E. DIMENSIONS NOT SHOWN ON STRUCTURAL DRAWINGS.
9. THE STRUCTURAL CONTRACT DOCUMENTS AND SPECIFICATIONS REPRESENT THE FINISHED STRUCTURE. UNLESS OTHERWISE INDICATED, THEY DO NOT INDICATE THE METHOD OF CONSTRUCTION.
10. NEITHER THE OWNER NOR THE ARCHITECT/STRUCTURAL ENGINEER WILL ENFORCE SAFETY MEASURES OR REGULATIONS. THE CONTRACTOR SHALL, AT HIS OWN EXPENSE, DESIGN, CONSTRUCT AND MAINTAIN ALL SAFETY DEVICES, INCLUDING SHORING AND BRACING AND SHALL BE SOLELY RESPONSIBLE FOR CONFORMING TO ALL LOCAL, STATE AND FEDERAL SAFETY AND HEALTH STANDARDS, LAWS AND REGULATIONS. OBSERVATION VISITS TO THE SITE BY THE STRUCTURAL ENGINEER SHALL NOT INCLUDE INSPECTION OF THE ABOVE SAFETY ITEMS.
11. SATISFACTORY EXECUTION OF CONSTRUCTION IS DEPENDENT UPON CONFORMANCE WITH THE INTENT OF THESE DRAWINGS. OWNER OR CONTRACTOR SHALL RETAIN A CALIFORNIA LICENSED STRUCTURAL ENGINEER DURING CONSTRUCTION TO OBSERVE THE CONSTRUCTION AND FILE A REPORT (DSA 6AE) STATING THE "THE CONSTRUCTION HAS, IN EVERY MATERIAL RESPECT, BEEN PERFORMED IN COMPLIANCE WITH THE DSA APPROVED DOCUMENTS".
12. CONSTRUCTION MATERIALS SHALL BE SPREAD OUT IF PLACED ON FRAMED FLOORS OR ROOF. LOAD SHALL NOT EXCEED DESIGN LIVE LOAD FOR EACH PARTICULAR LEVEL. WHEN WEIGHT OF MATERIALS OR EQUIPMENT MAY EXCEED DESIGN LOAD, STRUCTURAL SYSTEMS SHALL BE SHORED.
13. WHERE NO CONSTRUCTION DETAILS ARE SHOWN OR NOTED FOR ANY PART OF THE WORK. THE DETAILS SHALL BE THE SAME AS FOR OTHER SIMILAR WORK.

REINFORCING STEEL:

1. ALL REINFORCING STEEL SHALL BE PLACED IN CONFORMANCE WITH THE C.B.C., AND THE "MANUAL OF STANDARD PRACTICE" BY THE C.R.S.I.
2. REINFORCING BARS SHALL CONFORM TO A.S.T.M. A-615, DEFORMED GRADE 60. REINFORCING BARS THAT ARE TO BE WELDED SHALL CONFORM TO A.S.T.M. A-706, DEFORMED GRADE 60.
3. WELDING OF REINFORCEMENT SHALL BE IN ACCORDANCE WITH A.S.T.M. A-706 WITH LOW HYDROGEN ELECTRODES AND SHALL CONFORM TO THE STRUCTURAL WELDING CODE REINFORCING STEEL BY A.N.S.I. / A.W.S. D1.4. MINIMUM TENSILE STRENGTH OF WELD METAL SHALL BE 90 K.S.I. ALL WELDING SHALL BE PERFORMED BY CERTIFIED WELDERS.
4. ALL REINFORCING BAR BENDS SHALL BE MADE COLD.
5. DOWELS BETWEEN FOOTINGS AND WALLS OR COLUMNS SHALL BE LAPPED WITH THE SAME GRADE, SIZE, SPACING AND NUMBER AS THE VERTICAL REINFORCEMENT, RESPECTIVELY.
6. REINFORCING SPLICES SHALL BE MADE AS INDICATED ON THE DRAWINGS.
7. ALL VERTICAL REINFORCING SHALL BE CONTINUOUS BETWEEN TWO LEVELS, UNLESS NOTED OTHERWISE.
8. SLAB ON GRADE REINFORCING SHALL BE POSITIONED AT MID-DEPTH, UNLESS NOTED OTHERWISE.
9. PROVIDE #3 SPACER TIES AT 2'-6" ON CENTER IN ALL BEAMS AND FOOTINGS TO SECURE REINFORCING BARS IN PLACE, U.N.O.
10. PIPING AND CONDUIT SHALL BE SO FABRICATED AND INSTALLED THAT CUTTING, BENDING, OR DISPLACEMENT OF REINFORCEMENT FROM ITS PROPER LOCATION WILL NOT BE REQUIRED. A.C.I. #318-11

DESIGN BASIS:

CODE: 2013 C.B.C. (CALIFORNIA BUILDING CODE CCR, TITLE 24, PART 2)

GRAVITY LOADS:

1. ROOF LIVE LOAD 20 P.S.F. (REDUCIBLE)
   ROOF DEAD LOAD 22 P.S.F. (MAX.)
2. SNOW LOAD Pg 23.8 P.S.F.
   Pf 20.0 P.S.F.
   Ps 20.0 P.S.F.
   SNOW EXPOSURE FACTOR 1.2
   SNOW IMPORTANT FACTOR 1.0
   THERMAL FACTOR 1.0

LATERAL LOADS:

1. SEISMIC DESIGN
   SITE CLASS D
   Ss = 1.875 (USE 1.5 PER SECTION 1616A.1.12 OF 2013 CBC)
   S1 = 1.0
   Fa = 1.0
   I = 1.0
   R = 3.5 STEEL OMRF
   OCCUPANCY CATEGORY = II
   SDS = 1.0
   SD1 = 1.5
   SEISMIC DESIGN CATEGORY = D
   ANALYSIS METHOD = EQUIVALENT LATERAL FORCE ANALYSIS.

   SEISMIC BASE SHEAR:
   Cs = 0.286W
2. WIND DESIGN DIRECTIONAL PROCEDURE:
   110 M.P.H.
   EXPOSURE "C"
   Kzt = 1.0
   I = 1.0

ELEMENTS	ZONE	Pp
ROOF	1	26.8 P.S.F
	2	44.6 P.S.F.
	3	65.9 P.S.F.
WALL	4	30.4 P.S.F.
	5	37.5 P.S.F.
OVERHANG	2	52.2 P.S.F
	3	87.8 P.S.F

M.F.R.S.	ZONE	P
ROOF	WINDWARD	-22.0 P.S.F.
	LEEWARD	22.0 P.S.F.
WALL	WINDWARD	20.0 P.S.F.
	LEEWARD	-16.0 P.S.F.
OVERHANG		-39.0 P.S.F

FLOOD HAZARD: DESIGN DOES NOT ACCOUNT FOR FLOOD HAZARD.

IDENTIFICATION STAMP
DIV. OF THE STATE ARCHITECT
O2 117009
AC FLS SS
DATE 7/23/16

STRUCTURAL ENGINEER OF RECORD
ORION
Structural Engineering, Inc.
12257 OLD POMERADO ROAD, SUITE A
POWAY, CA 92064
PHONE (858) 679-1974
FAX (858) 679-1975

IDENTIFICATION STAMP
DIV. OF THE STATE ARCHITECT
OFFICE OF REGULATION SERVICES
02-113899
AC FLS SS
DATE 12/19/15

PC

JTS MODULAR INC
• A BETTER WAY TO BUILD •
COMMERCIAL INSTITUTIONAL AND RESIDENTIAL MODULAR BUILDINGS DESIGN & PLANNING
7001 Mc Divitt Dr.
Bakersfield, CA 93313
Office: (661) 835-9270
Plant: (661) 833-2940
Fax: (661) 847-1007
www.jtsmodular.com

SLAB ON GRADE
CLASSROOM PC
#

REGISTERED PROFESSIONAL ENGINEER
RYAN J. ORION
No. S-4437
EXP. 12/31/15
STRUCTURAL
STATE OF CALIFORNIA

REVISIONS DESCRIPTION: | DATE:

CLIENT NAME:
DRAWN BY: B.N.
CHECKED BY: R.J.O.
JOB NUMBER:
DATE: 09/12/2014
SCALE: AS NOTED

SHEET NAME
GENERAL NOTES

SHEET NO.
S1.1

STRUCTURAL OBSERVATION:

1. PER C.B.C. CHAPTER 17A, 1704A.5 THE OWNER SHALL EMPLOY A LICENSED ENGINEER OR ARCHITECT RESPONSIBLE FOR THE STRUCTURAL DESIGN, OR HIS DESIGNATED ENGINEER OR ARCHITECT OT MAKE SITE VISITS TO OBSERVE GENERAL COMPLIANCE WITH THE APPROVED STRUCTURAL PLANS, SPECIFICATIONS AND CHANGE ORDERS. THE ENGINEER OR ARCHITECT SHALL SUBMIT A STATEMENT IN WRITING TO THE BUILDING OFFICIAL STATING THAT THE SITE VISIT HAS BEEN MADE AND THAT ANY DEFICIENCIES NOTED HAVE BEEN CORRECTED.

AUTOMATIC END WELDED STUDS:

A. MATERIAL:

AUTOMATIC END WELDED STUDS SHALL BE NELSON GRANULAR FLUXFILLED SHEAR CONNECTOR OR ANCHOR STUDS (OR APPROVED EQUAL).

STUDS SHALL BE MANUFACTURED OF C–1015 COLD ROLLED STEEL WHICH CONFORMS TO A.S.T.M. SPEC. A–108–58–T.

B. INSTALLATION:

THE STUDS SHALL BE AUTOMATICALLY END WELDED IN ACCORDANCE WITH THE MANUFACTURER'S RECOMMENDATIONS IN SUCH A MANNER AS TO PROVIDE COMPLETE FUSION BETWEEN THE END OF THE STUD AND THE PLATE. THERE SHOULD BE NO POROSITY OR EVIDENCE OF LACK OF FUSION BETWEEN THE WELDED END OF THE STUD AND THE PLATE. THE STUD SHALL DECREASE IN LENGTH DURING WELDING APPROXIMATELY 1/8" FOR 5/8" AND UNDER, AND 3/16" FOR OVER 5/8" DIAMETER. WELDING SHALL BE DONE ONLY BE QUALIFIED WELDERS APPROVED BY THE WELDING INSPECTOR.

C. INSPECTION AND TESTS:

INSPECTION, IN ACCORDANCE WITH TITLE 24, SECTION 1704A.3.1.1, OF ALL THE SHOP AND FIELD OPERATIONS FOR THE AUTOMATIC END WELDED STUDS SHALL BE MADE BY A QUALIFIED WELDING INSPECTOR (APPROVED BY THE DIVISION OF THE STATE ARCHITECT). THE TYPE AND CAPACITY OF THE WELDING EQUIPMENT SHALL BE IN ACCORDANCE WITH THE MANUFACTURER'S RECOMMENDATIONS AND SHALL BE CHECKED AND APPROVED BY A WELDING INSPECTOR.

AT THE BEGINNING OF EACH DAY'S WORK, A MINIMUM OF TWO (2) TEST STUD WELDS SHALL BE MADE WITH THE EQUIPMENT TO BE USED TO METAL WHICH IS THE SAME AS THE ACTUAL WORK PIECE. THE TEST STUDS SHALL BE SUBJECTED TO A 90% BEND TEST BY STRIKING THEM WITH A HEAVY HAMMER. AFTER THE ABOVE TEST, THE WELD SECTION SHALL NOT EXHIBIT ANY TEARING OUT OR CRACKING.

TESTING OF END–WELDING STUDS SHALL BE IN ACCORDANCE WITH SECTION 2212A.2, PART 2, TITLE 24.

LUMBER:

1. STRUCTURAL LUMBER SHALL BE STRESS–MARKED DOUGLAS FIR–LARCH OR HEM FIR. S4S IN ACCORDANCE WITH GRADING AND DRESSING RULE NO. 16 OF THE WEST COAST LUMBER INSPECTION BUREAU (LATEST EDITION).
2. LUMBER SHALL NOT BE BORE OR NOTCHED, EXCEPT WHERE DETAILED.
3. SILLS AND PLATES IN CONTACT WITH CONCRETE OR MASONRY WITHIN 48 INCH OF GROUND SHALL BE PRESSURE TREATED DOUGLAS FIR–LARCH OR HEM FIR.
4. PROVIDE 2x FIRE BLOCKING AT MID–HEIGHT OF STUD PARTITIONS OVER 8'–6" IN HEIGHT.
5. PROVIDE 2x SOLID BLOCKING AT ALL SUPPORTS FOR CEILING JOISTS EXCEPT WHERE JOISTS ARE SUPPORTED BY JOIST HANGERS.
6. ROOF SHEATHING INSPECTIONS SHALL BE MADE PRIOR TO COVERING. ALL STRUT CONNECTIONS SHALL BE COMPLETED PRIOR TO INSPECTION.
7. SEE DRAWINGS FOR SHEAR WALL SCHEDULE, HOLDOWN DETAILS, PANEL LOCATIONS, ETC. SHEAR PANEL NAILING SHALL BE SPACED AT LEAST 3/8 INCH FROM ALL EDGES.
8. METAL CONNECTORS SHALL BE "SIMPSON STRONG–TIE" OR EQUAL, EXCEPT AS SHOWN. FILL ALL HOLES OF THE PREFAB. CONNECTORS AS SPECIFIED BY MANUFACTURER.
9. LUMBER MINIMUM GRADE:

A. TOP PLATES	#2
B. 2x4 STUDS, 8'–0" MAX.	#2
2x4 STUDS, 8'–1" TO 14'–0"	#2
2x6 STUDS AND LARGER	#2
POST	#1 OR BETTER

10. ALL BOLTS AND LAG SCREWS SHALL HAVE STANDARD CUT WASHERS BETWEEN THE WOOD AND THE NUTS. SEE DRAWINGS FOR LOCATIONS OF PLATE WASHERS AS REQUIRED.

BOLTS	A.S.T.M. A–307
LAG SCREWS	A.N.S.I. B–18
NUTS	A.S.T.M. A–563
WASHERS	A.S.T.M. F–844

11. LEAD HOLES FOR LAG SCREWS SHALL HAVE THE SAME DIAMETER OF THE SHANK FOR THE UNTHREADED PORTION OF THE SHANK, AND 70% OF THE SHANK DIAMETER FOR THE THREADED PORTION. ALL LAG SCREWS SHALL BE INSERTED BY TURNING WITH A WRENCH AND NOT BY DRIVING WITH A HAMMER.
12. TOP PLATES OF ALL WOOD STUD WALLS SHALL BE TWO PIECE SAME SIZE AS STUDS EXCEPT AS NOTED OTHERWISE, LAP 4'–0" MINIMUM WITH NO LESS THAN 12– 16d AND NO MORE THAN SIX INCHES BETWEEN NAILS AT EACH LAP.
13. STRUCTURAL PLYWOOD FOR ROOF AND WALLS SHALL BE A.P.A. RATED AS INDICATED ON THE DRAWINGS IN ACCORDANCE WITH U.S. PRODUCT STANDARD P1 AND P2, LATEST EDITION.
14. ALL BOLTS, LAG SCREWS, AND WOOD SCREWS SHALL BE RETIGHTENED PRIOR TO THE APPLICATION OF DRYWALL, PLYWOOD, PLASTER, ETC..
15. ALL FASTENERS IN CONTACT WITH PRESSURE TREATED LUMBER SHALL BE HOT DIPPED GALVANIZED.
16. ALL NAILING SHALL CONFORM NAILING SCHEDULE, USING COMMON WIRE NAILS. PREDRILL ALL NAILS 20d AND LARGER AND WHERE REQUIRED TO PREVENT SPLITTING.
17. THE MOISTURE CONTENT OF WOOD MEMBERS SHALL NOT EXCEED 19%, DURING INSTALLATION. IT WILL BE THE RESPONSIBILITY OF THE INSPECTOR OF RECORD TO VERIFY THAT THE CONTRACTOR HAS SUPPLIED LUMBER OF THE PROPER MOISTURE CONTENT BEFORE INSTALLATION. THE USE OF A HAND HELD MOISTURE CONTENT METER IS ACCEPTABLE.

COLD FORMED STRUCTURAL STEEL:

1. ALL LIGHT GAUGE METAL FRAMING SHALL BE THE TYPE, SIZE AND GAUGE AS SHOWN ON THE PLANS AND BE FABRICATED AND ERECTED IN ACCORDANCE WITH 2007 A.I.S.I. SPECIFICATIONS.
2. ALL GALVANIZED STUDS AND JOISTS 12, 14 AND 16 GAUGE SHALL CONFORM TO A.S.T.M. A–1011 GRADE D (Fy = 50 K.S.I.) AND A.S.T.M. A–1011 GRADE A (Fy = 33 K.S.I.) FOR 18 AND 20 GAUGE.
3. ALL GALVANIZED TRACK BRIDGING, END ENCLOSURES AND ACCESSORIES SHALL CONFORM TO A.S.T.M. A–1011 GRADE A (Fy = 33 K.S.I.).
4. GALVANIZED COATINGS MUST MEET A.S.T.M. A–525 SPECIFICATION.
5. CARBON SHEET STEEL MUST MEET THE MINIMUM REQUIREMENTS OF A.S.T.M. A1011 GRADE 50 K.S.I. FOR 12, 14, AND 16 GAUGE. AND GRADE 33 K.S.I. FOR 18 GAUGE. AND LIGHTER MEMBERS. CARBON SHEET STEEL PRODUCTS MUST BE THOROUGHLY COATED WITH A RUST INHIBITIVE PAINT.
6. ALL STRUCTURAL MEMBERS SHALL BE DESIGNED IN ACCORDANCE WITH THE 2007 AMERICAN IRON AND STEEL INSTITUTE (A.I.S.I.) "SPECIFICATION FOR THE DESIGN OF COLD FORMED STEEL STRUCTURAL MEMBERS" LATEST EDITION.
7. METAL STUDS AND/OR JOIST:
   A. FOR METAL STUD WALLS, UNLESS OTHERWISE SHOWN ON THE DRAWINGS, PROVIDE STANDARD PUNCHED STEEL MEMBERS OF THE GAUGES SHOWN ON THE DRAWINGS.
   B. USE ONLY ONE TYPE THROUGHOUT THE WORK, UNLESS OTHERWISE NOTED ON THE DRAWINGS OR SPECIFICALLY APPROVED IN ADVANCE BY THE ARCHITECT/ENGINEER.
8. PROVIDE ALL ACCESSORIES INCLUDING, BUT NOT NECESSARILY LIMITED TO, TRACKS, CLIPS, WEB STIFFENERS, ANCHORS, FASTENING DEVICES, RESILIENT CLIPS AND OTHER ACCESSORIES REQUIRED FOR A COMPLETE AND PROPER INSTALLATION, AND AS RECOMMENDED BY THE MANUFACTURER FOR THE STEEL MEMBERS USED.
9. FASTENINGS OF COMPONENTS SHALL BE WITH SELF–DRILLINGS SCREWS OR WELDING. SCREWS OR WELDS SHALL BE OF SUFFICIENT SIZE TO INSURE THE STRENGTH OF THE CONNECTION. ALL WELDS OF GALVANIZED STEEL SHALL BE TOUCHED UP WITH ZINC–RICH PAINT. ALL WELDS OF CARBON SHEET STEEL SHALL BE TOUCHED UP WITH PAINT.
10. ALL METAL STUDS SHALL BE BY S.S.M.A. APPROVED SUPPLIER, ALTERNATE METAL STUDS MUST BE OF EQUAL OR GREATER SECTIONS PROPERTIES AND SHALL BE APPROVED BY THE ENGINEER.
11. PROVIDE SHOP DRAWINGS INDICATING MEMBER GAUGES, SHAPES, SIZES, SPACING, LOCATIONS AND CONNECTIONS.
12. STUDS SHALL BE INSTALLED WITH THEIR BEARING ENDS POSITIONED FLUSH AGAINST THE INSIDE TRACK WEB.
13. FULL–HEIGHT DOUBLE STUDS SHALL BE PROVIDED AT THE ENDS OF PARTITIONS, AT ALL WALL OPENINGS, AND AT OTHER LOCATIONS SHOWN ON THE PLANS.
14. BRIDGING SHALL BE COLD FORMED CHANNEL, MINIMUM 1–1/2" DEEP WITH 9/16" FLANGE SPACED AT 4'–0" ON CENTER MAXIMUM VERTICALLY. DOUBLE UP STUDS AT ALL DOOR JAMBS, WALL ENDS AND WALL CORNERS.
15. SHEATHING SHALL BE ATTACHED TO BOTH FACES OF METAL WALL STUDS THROUGHOUT THEIR LENGTH, U.O.N.
16. TRACK AT TOP AND BOTTOM OF STUD WALLS SHALL AT A MINIMUM MATCH THE STUD GAUGE, U.N.O.
17. ALL SHEET METAL SCREWS SHALL E THREAD FORMING OR THREAD CUTTING WITH OR WITHOUT A SLF DRILLING POINT, PER AISI.
18. ALL WELDING OR MATERIAL LESS THAN 0.18 INCHES IN THICKNESS SHALL BE MADE IN ACCORDANCE WITH THE A.W.S. D1.3 WELDERS AND WELDING PROCEDURES AND SHALL BE QUALIFIED AS SPECIFIED IN A.W.S. D1.3.
19. TOUCH UP COLD GALVANIZING USING ZRC CHEMICAL PRODUCTS CO., ZRC COLD GALVANIZING COMPOUND OR EQUAL.
20. SPLICES IN STUDS SHALL NOT BE PERMITTED.

GAUGE EQUIVALENTS	
GAUGE	MILS (MIN. THCK)
10	118
11	105
12	97
14	68
16	54
18	43
20	33

WELDING:

1. ALL WELDING SHALL BE IN ACCORDANCE WITH THE PROVISIONS OF THE AMERICAN WELDING SOCIETY CODE D1.1. (LATEST EDITION).
2. ALL WELDING SHALL BE DONE BY CERTIFIED WELDERS.
3. ALL WELDING SHALL BE DONE BY THE SHIELDED ARC PROCESS USING APPROVED ELECTRODES PER A.W.S. SPECIFICATIONS E70XX (LOW HYDROGEN ELECTRODES).
4. ALL WELDS SHALL HAVE A WELD CONTROLLED SEQUENCE AND TECHNIQUE IN ORDER TO MINIMIZE SHRINKAGE, STRESSES AND DISTORTION.
5. ALL ELECTRODES FILLER MATERIAL SHALL BE A MINIMUM OF E70XX.
6. WELDING OF REINFORCING BARS TO BE IN ACCORDANCE WITH A.W.S. D1.4. REINFORCING STEEL TO BE WELDED SHALL HAVE A CARBON EQUIVALENT (CE) OF 0.75 SPECIAL INSPECTION IS REQUIRED.
7. WELDING OF SHEET METAL SHALL BE IN ACCORDANCE WITH A.W.S. D1.3.
8. SPECIAL INSPECTION IS REQUIRED FOR ALL WELDING.
9. ALL SHOP AND FIELD WELDING OF MOMENT CONNECTIONS OR MOMENT RESISTING FRAMES, AND ALL COLUMN SPLICE WELDS, SHALL BE TESTED AS PER C.B.C.

STEEL:

1. FABRICATION AND ERECTION TO CONFORM TO A.I.S.C. 360–10 "SPECIFICATION FOR THE DESIGN, FABRICATION AND ERECTION OF STRUCTURAL STEEL BUILDINGS" AND "CODE OF STANDARD PRACTICE FOR STEEL BUILDINGS AND BRIDGES" EXCEPT AS OTHERWISE SHOWN OR SPECIFIED.
2. QUALIFIED AND CERTIFIED WELDERS SHALL BE USED FOR ALL WELDING. ALL WELDING TO CONFORM TO THE LATEST EDITION OF THE AMERICAN WELDING SOCIETY STRUCTURAL WELDING CODE A.W.S. D1.1.
3. MATERIALS:

ROLLED STRUCTURAL STEEL SHAPES	A.S.T.M. A–992, GRADE 50
ANGLES, MISC. STEEL	A.S.T.M. A36
MISCELLANEOUS PLATES	A.S.T.M. A–572 GRADE 36
STRUCTURAL STEEL PIPES	A.S.T.M. A53 TYPE E OR S, GRADE B
WELDING ELECTRODES	A.W.S. STRUCTURAL STEEL E70XX, REINFORCING STEEL E90XX
ANCHOR BOLTS	A.S.T.M. A–1554F GRADE 36
TYPICAL STEEL CONNECTION BOLTS	A.S.T.M. A–325
MISCELLANEOUS BOLTS	A.S.T.M. A–307
GALVANIZING	A.S.T.M. A–123
RUST–INHIBITING PRIMER	TT–P–645 A.S.T.M.
STEEL TUBING	A.S.T.M. A–500, GRADE B (Fy = 46 K.S.I.)

4. PRIMER AND PAINT GALVANIZE AFTER FABRICATION ALL STRUCTURAL STEEL AND CONNECTORS EXPOSED TO WEATHER. TOUCH UP DAMAGED PRIMER AND PAINT AFTER ERECTION IS COMPLETE.
5. CONNECTED MEMBERS SHALL BEAR ONLY UPON UNTHREADED PORTIONS OF BOLTS.
6. BURNING OF HOLES IS NOT ALLOWED.
7. INSPECTION OF WELDING SHALL CONFORM TO C.B.C. REQUIREMENTS (CHAPTER 17A).
8. THE STRUCTURAL STEEL FABRICATOR SHALL SUBMIT SHOP DRAWINGS TO THE ENGINEER FOR APPROVAL PRIOR TO FABRICATION.
9. BOLT HOLES SHALL BE 1/16" LARGER IN DIAMETER THAN NOMINAL SIZE OF BOLT USED, UNLESS NOTED OTHERWISE.
10. ALL STRUCTURAL STEEL SURFACES TO RECEIVE SPRAY–APPLIED FIREPROOFING, OR TO BE ENCASED IN CONCRETE OR MASONRY, SHALL BE LEFT UNPAINTED.
11. STRUCTURAL STEEL SHALL BE DELIVERED TO THE JOB SITE FREE OF EXCESSIVE RUST, MILL SCALE, GREASE, ETC.
12. OPENINGS SHALL NOT BE PLACED IN STEEL MEMBERS UNLESS SPECIFICALLY DETAILED.

IDENTIFICATION STAMP
DIV. OF THE STATE ARCHITECT
02 117009
AC ___ FLS ___ SS
DATE 7/23/18

STRUCTURAL ENGINEER OF RECORD
ORION
Structural Engineering, Inc.
12257 OLD POMERADO ROAD, SUITE A
POWAY, CA 92064
PHONE (858) 679-1974
FAX (858) 679 1975

FILE # PC-JTS

IDENTIFICATION STAMP
DIV. OF THE STATE ARCHITECT
OFFICE OF REGULATION SERVICES
02-113899
AC ___ FLS ___ SS ___
DATE 3/19/15

PC

JTS MODULAR INC
• A BETTER WAY TO BUILD •
COMMERCIAL INSTITUTIONAL AND RESIDENTIAL MODULAR BUILDINGS DESIGN & PLANNING
7001 Mc Divitt Dr.
Bakersfield, CA 93313
Office: (661) 835-9270
Plant: (661) 833-2940
Fax: (661) 847-1007
www.jtsmodular.com

SLAB ON GRADE
CLASSROOM PC
#

REGISTERED PROFESSIONAL ENGINEER
RYAN J. OMER
No. S 4437
EXP. 12/31/16
STRUCTURAL
STATE OF CALIFORNIA

REVISIONS DECRIPTION: | DATE:

CLIENT NAME:
DRAWN BY: B.N.
CHECKED BY: R.J.O.
JOB NUMBER:
DATE: 01/12/2015
SCALE: AS NOTED

SHEET NAME
GENERAL NOTES

SHEET NO.
S1.2

ABBREVIATIONS:

&	AND	KIPS	KILOPOUNDS (1,000 POUNDS)
@	AT	K.O.	KNOCK OUT
℄	CENTER LINE	LB	POUND
ℙ	PLATE, PROPERTY LINE	L.B.	LAG BOLT
A.B.	ANCHOR BOLT	L.F.	LINEAR FOOT
ADJ	ADJACENT	LG	LONG
A.F.F.	ABOVE FINISH FLOOR	L.L.	LIVE LOAD
ARCH'L	ARCHITECTURAL	L.L.H.	LONG LEG HORIZONTAL
BD	BOARD	L.L.V.	LONG LEG VERTICAL
BLD'G	BUILDING	L.S.	LAG SCREW
BLK	BLOCK	LT.	LIGHT
BLK'G	BLOCKING	MAS	MASONRY
BLW	BELOW	MAT.	MATERIAL
BM	BEAM	MAX.	MAXIMUM
B.N.	BOUNDARY NAIL	M.B.	MACHINE BOLT
BOT.	BOTTOM	MECH'L	MECHANICAL
BRG	BEARING	MEZZ.	MEZZANINE
B.S.	BOTH SIDE	MIN.	MINIMUM
BTWN	BETWEEN	M.H.	MANHOLE
C.B.	CARRIAGE BOLT	MANUF.	MANUFACTURER
C.F.	CUBIC FOOT	MTL.	METAL
CHAM	CHAMFER	N.S.	NEAR SIDE
C.I.	CAST-IRON	N.I.C.	NOT IN CONTRACT
C.I.P.	CAST-IN-PLACE	NOM.	NOMINAL
C.J.	CONTROL JOINT	N.T.S.	NOT TO SCALE
CLG	CEILING	O.C.	ON CENTER
CLK	CAULK	O.D.	OUTSIDE DIAMETER
CLK'G	CAULKING	O.H.	OPPOSITE HAND
CLR.	CLEAR	OPN'G	OPENING
C.M.U.	CONCRETE MASONRY UNIT	OPP	OPPOSIDE
CNTR	CENTER	O.W.J.	OPEN WEB JOIST
COL	COLUMN	P.C.	PRECAST
CONC	CONCRETE	PERP.	PERPENDICULAR
CONN	CONNECTION	PLYWD	PLYWOOD
CONT	CONTINUOUS	PNL.	PANEL
CNTRSNK	COUNTERSINK	PREFAB	PREFABRICATED
d	PENNY	P.S.F.	POUNDS PER SQUARE FOOT
DBL	DOUBLE	P.S.I.	POUNDS PER SQUARE INCHES
DEP	DEPRESSED	PT	POINT
DET	DETAIL	P.T.	PRESSURE TREATED
D.F.	DOUGLAS FIR	P.V.C.	POLYVINYL CHLORIDE
D.F.L.	DOUGLAS FIR/LARCH	RAD	RADIUS
DIA	DIAMETER	R.D.	ROOF DRAIN
DIAG	DIAGONAL	REF.	REFERENCE
DIAM.	DIMENSION	REINF.	REINFORCED / REINFORCING
D.L.	DEAD LOAD	REQ'D	REQUIRED
DN	DOWN	REV.	REVISION
DIV	DIVISION	RF	ROOF
DR	DOOR	RFTR	RAFTER
DWG	DRAWING	R.H.	ROOF HATCH
DWL	DOWEL	RM	ROOM
EA	EACH	R.O.	ROUGH OPENING
E.F.	EACH FACE	R.S.	ROUGH SAWN
EL.	ELEVATION	SCHED.	SCHEDULE
ELEV.	ELEVATION / ELEVATOR	SECT.	SECTION
EMBED	EMBEDMENT	S.F.	SQUARE FOOT
E.N.	EDGE NAIL	SHT	SHEET
EQ.	EQUAL	SHT'G	SHEETING
EQUIP	EQUIPMENT	SIM.	SIMILAR
E.S.	EACH SIDE	S.M.S.	SHEET METAL SCREW
E.W.	EACH WAY	SPEC.	SPECIFICATION
EXIST'G	EXISTING	SQ.	SQUARE
EXP	EXPANSION	S.S.	STAINLESS STEEL
EXT	EXTERIOR	STAGG.	STAGGERED
F.D.	FLOOR DRAIN	STD	STANDARD
FDN	FOUNDATION	STIFF.	STIFFENER
F.F.	FINISH FLOOR	STL.	STEEL
FIN.	FINISH	STRUCT'L	STRUCTURAL
FLR.	FLOOR	S.T.S.	SELF TAPPING SCREW
F.N.	FIELD NAIL____	SYM	SYMMETRICAL
F.O. ____	FACE OF	SYS	SYSTEM
FRM'G	FRAMING	T & B	TOP AND BOTTOM
F.S.	FAR SIDE	T & G	TONGUE AND GROOVE
FT	FEET / FOOT	TEMP	TEMPORARY
FTG	FOOTING	THK	THINK
GA	GAUGE	THKN'D	THICKENED
GALV	GALVANIZED	THRU	THROUGH
G.I.	GALVANIZED IRON	T.L.	TOTAL LOAD
GLB	GLU-LAMINATED BEAM	T.O. ____	TOP OF ____
GRD	GRADE	T.S.G.	TAPERED STEEL GIRDER
GYP	GYPSUM	TYP.	TYPICAL
H.D.	HOLDOWN	U.N.O.	UNLESS NOTED OTHERWISE
HDR	HEADER	U.T.	ULTRASONIC TESTING
HGR	HANGER	VERT.	VERTICAL
HORIZ	HORIZONTAL	W/	WITH
HRD	HARD	W/O	WITHOUT
H.S.B.	HIGH STRENGTH BOLT	WD	WOOD
HT.	HEIGHT	WIN	WINDOW
HVAC	HEATING, VENTILATION, & AIR CONDITIONING	W.P.	WATERPROOF / WORK POINT
IN.	INCH	W.P.J.	WEAKENED PLANE JOINT
INSP.	INSPECTION / INSPECTOR	WT.	WEIGHT
INT.	INTERIOR	W.W.F.	WELDED WIRE FABRIC
JST	JOIST	W.W.M.	WELDED WIRE MESH
JT	JOINT		

MINIMUM NAILING SCHEDULE

CONNECTION	NAILING[1]
JOIST to sill or girder, toenail	3–8d
BRIDGING to joist, toenail each end	2–8d
1" X 6" SUBFLOOR or less to each joist, face nail	2–8d
WIDER than 1" X 6" SUBFLOOR or less to each joist, face nail	3–8d
2" SUBFLOOR to joist or girder, blind and face nail	2–16d
SOLE PLATE to joist or blocking, typical face nail SOLE PLATE to joist or blocking, at braced wall panels	16d at 16" o.c. 3–16d at 16" o.c.
TOP PLATE to stud, end nail	2–16d
STUD to sole plate	4–8d toenail, or 2–16d end nail
DOUBLE STUD, face nail	16d at 24" o.c.
DOUBLE TOP PLATES, typical face nail DOUBLE TOP PLATE, lap splice	16d at 16" o.c. 8–16d
BLOCKING between joists or rafters to top plate, toenail	3–8d
RIM JOIST to top plate, toenail	8d at 6" o.c.
TOP PLATE, lap at intersections, face nail	2–16d
CONTINUOUS HEADER, two pieces	16d at 16" o.c. along each edge
CEILING JOISTS to plate, toenail	3–8d
CONTINUOUS HEADER to stud, toenail	4–8d
CEILING JOISTS, laps over partitions, face nail	3–16d
CEILING JOISTSto parallel rafters, face nail	3–16d
RAFTERS to plate, toenail	3–8d
1" DIAGONAL BRACE to each stud and plate, face nail	2–8d
1" x 8" SHEATHING or less to each bearing, face nail	3–8d
WIDER than 1" x 8" SHEATHING to each bearing, face nail	3–8d
BUILD-UP CORNER studs	16d at 24" o.c.
BUILD-UP GIRDERS and BEAMS	20d at 32" o.c. at top and bottom and staggered on opposite side 2– 20d at ends and at each splice
2" PLANKS	2–16d at each bearing
COLLAR TIE to rafter, face nail	3–10d
JACK RAFTER to hip	3–10d toe nail or 2– 16d face nail
ROOF RAFTER to 2x ridge beam	2–10d toe nail 2– 16d face nail
JOIST to band joist, face nail	3–16d
LEDGER STRIP, face nail	3–16d

1. COMMON NAILS SHALL BE USED EXCEPT WHERE OTHERWISE STATED.
   6d NAIL – 2" x 0.113"ø
   8d NAIL – 2 1/2" x 0.131"ø
   10d NAIL – 3" x 0.148"ø
   16d NAIL – 3 1/2" x 0.162"ø
   20d NAIL – 4" x 0.192"ø
2. 1" (INCH) = 25.4 mm

IDENTIFICATION STAMP
DIV. OF THE STATE ARCHITECT
02 117009
AC ___ FLS ___ SS
DATE 7/23/18

STRUCTURAL ENGINEER OF RECORD

ORION
Structural Engineering Inc.
12257 OLD POMEROY ROAD, SUITE A
POWAY, CA 92064
PHONE (858) 679-1574
FAX (858) 679 1975

PC-JTS

IDENTIFICATION STAMP
DIV. OF THE STATE ARCHITECT
OFFICE OF REGULATION SERVICES
02-113899
AC ___ FLS ___ SS
DATE 7/19/15

PC

JTS MODULAR INC
• A BETTER WAY TO BUILD •
COMMERCIAL INSTITUTIONAL AND RESIDENTIAL MODULAR BUILDINGS DESIGN & PLANNING
7001 Mc Divitt Dr.
Bakersfield, CA 93313
Office: (661) 835-9270
Plant: (661) 833-2940
Fax: (661) 847-1007
www.jtsmodular.com

SLAB ON GRADE CLASSROOM PC #

REGISTERED PROFESSIONAL ENGINEER
RYAN J. ORION
No. S 4457
EXP. 12/31/16
STRUCTURAL
STATE OF CALIFORNIA

REVISIONS DECRIPTION:	DATE:

CLIENT NAME:
DRAWN BY: B.N.
CHECKED BY: R.J.O.
JOB NUMBER:
DATE: 01/12/2015
SCALE: AS NOTED

SHEET NAME
GENERAL NOTES

SHEET NO.
S1.3

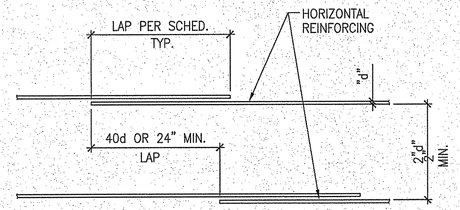

	BAR SIZE										
	#3	#4	#5	#6	#7	#8	#8	#10			
LAP LENGTH	24"	24"	30"	36"	42"	51"	64"	81"			

HARDROCK CONCRETE
F'y = 60,000 P.S.I. (CLASS "B")

NOTES:

1. SPLICE LENGTH SHALL BE DETERMINED FROM THE SIZE OF THE SMALLER BAR SPLICED.

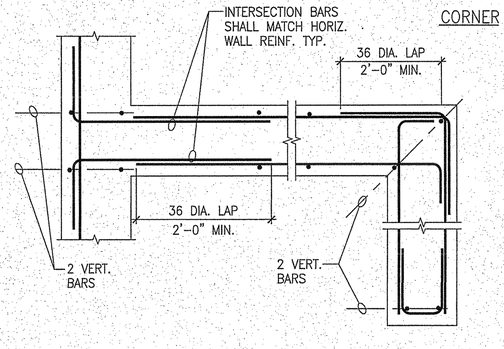

INTERSECTION END

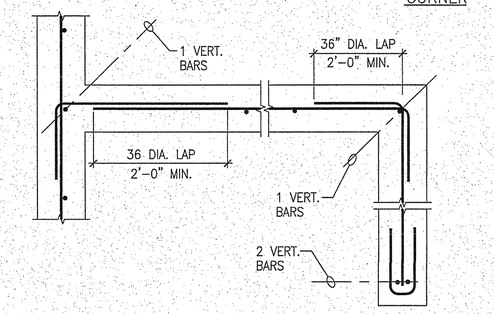

INTERSECTION END

X 4 X 1

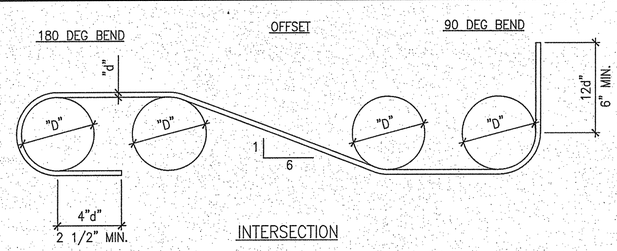

INTERSECTION

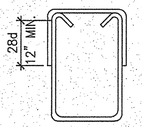

CAP STIRRUP

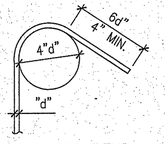

135 DEG BEND

REINFORCING BAR BEND	
REINFORCING SIZE	BAR BEND DIAMETER ("D")
#3 TO #8	6d
#8 TO #11	8d
#14 TO #18	10d

NOTE: ALL BENDS SHALL BE MADE COLD

NOTE:
CAP STIRRUPS MAY BE USED WHENEVER 135° CLOSED STIRRUPS ARE SHOWN IN GRADE BEAM ONLY

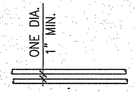

BAR CLEARANCE

X 5 X 2

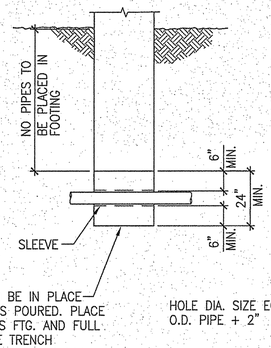

CONC. FILL TO BE IN PLACE BEFORE FTG. IS POURED. PLACE SAME WIDTH AS FTG. AND FULL WIDTH OF PIPE TRENCH

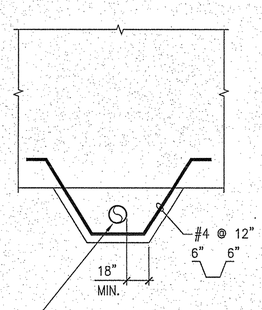

HOLE DIA. SIZE EQUAL O.D. PIPE + 2"

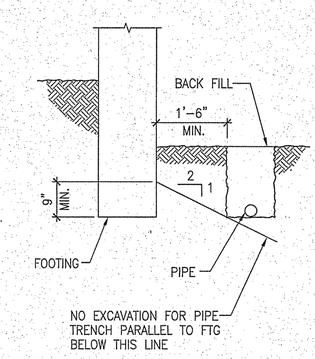

NO EXCAVATION FOR PIPE TRENCH PARALLEL TO FTG BELOW THIS LINE

X 7 X 6 X 3

ADJACENT POURS MUST BE MADE 8 HOURS APART

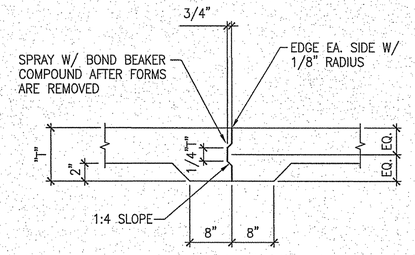

CONSTRUCTION JOINT
(C.J.)

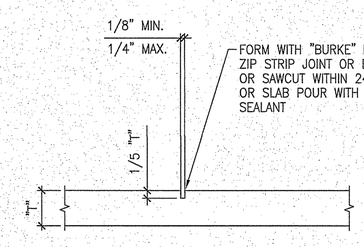

NOTE:
MAX. GRID; 12'-0" x 10'-0"

WEAKENED PLANE JOINT
(W.P.J.)

IDENTIFICATION STAMP
DIV. OF THE STATE ARCHITECT
02 117009
AC. FLS SS 19
DATE 7/23/18

STRUCTURAL ENGINEER OF RECORD

ORION
Structural Engineering Inc.
12257 OLD POMEROY ROAD, SUITE A
POWAY, CA 92064
PHONE (858) 679-1974
FAX (858) 679 1975

FILE: PC-JTS

IDENTIFICATION STAMP
DIV. OF THE STATE ARCHITECT
OFFICE OF REGULATION SERVICES
02- 113899
AC. FLS SS
DATE 3/19/15

PC

JTS
MODULAR INC.
• A BETTER WAY TO BUILD •
COMMERCIAL
INSTITUTIONAL
AND
RESIDENTIAL
MODULAR
BUILDINGS
DESIGN &
PLANNING
7001 Mc Divitt Dr.
Bakersfield, CA 93313
Office: (661) 835-9270
Plant: (661) 833-2940
Fax: (661) 847-1007
www.jtsmodular.com

SLAB ON GRADE
CLASSROOM PC
#

REGISTERED PROFESSIONAL ENGINEER
RYAN T. ORION
No. S 4457
EXP. 12/31/16
STRUCTURAL
STATE OF CALIFORNIA

REVISIONS DESCRIPTION: DATE:

CLIENT NAME:
DRAWN BY: B.N.
CHECKED BY: R.J.O.
JOB NUMBER:
DATE: 01/12/2015
SCALE: AS NOTED

SHEET NAME
TYPICAL
DETAILS

SHEET NO.
S1.4

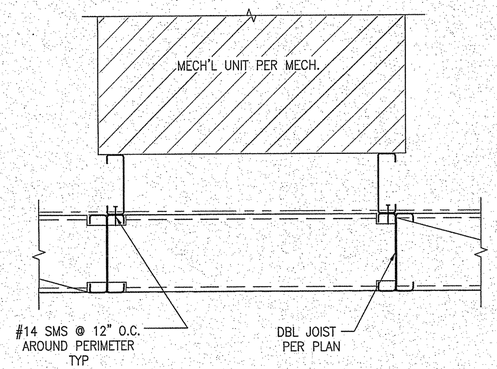

MECHANICAL UNIT SUPPORT (7)

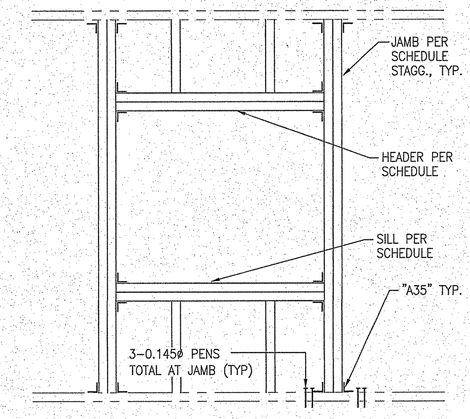

HEADER SCHEDULE		
SPAN	HEADER/SILL	JAMB
0' TO 6'-0"	2- 2x	2- 2x
6'-1" TO 8'-0"	3- 2x	3- 2x

NOTES:

1. THIS SCHEDULE APPLIES, UNLESS NOTED OTHERWISE.
2. NAIL HEADER WITH FACE NAILING @ 12" O.C., TYP.
3. ATTACH JAMB AND HEADERS w/ "A35" EA. END.
3. 2 x 6 @ 16" O.C. FRAMING @ EXTERIOR WALLS
3. 2 x 4 @ 16" O.C. FRAMING (MIN) @ INTERIOR WALLS

(4) WALL WALL FRAMING DETAIL (1)

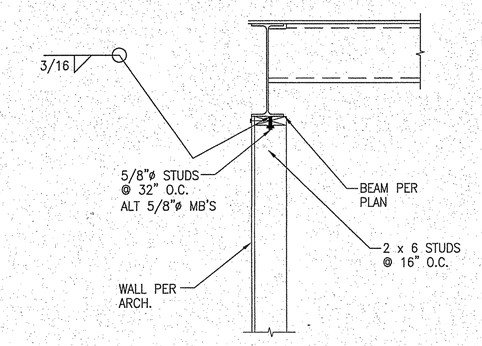

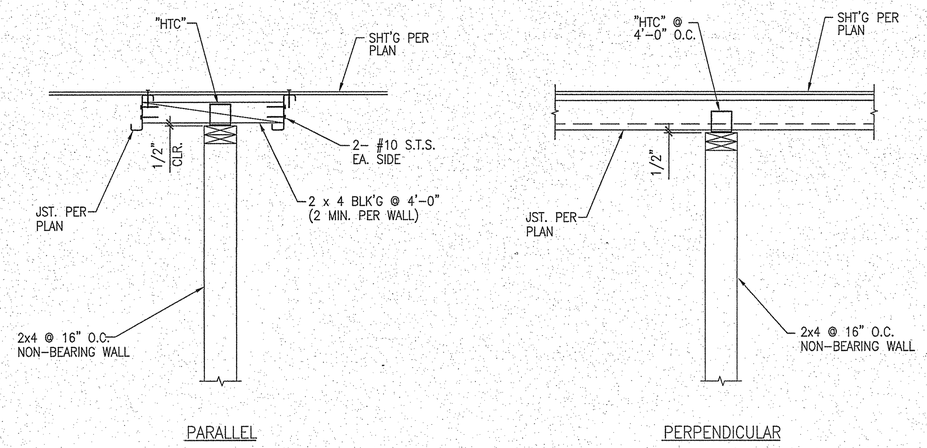

X (8) EXTERIOR WALL CONNECTION (5) INTERRIOR NON-BEARING WALL SUPPORT (2)

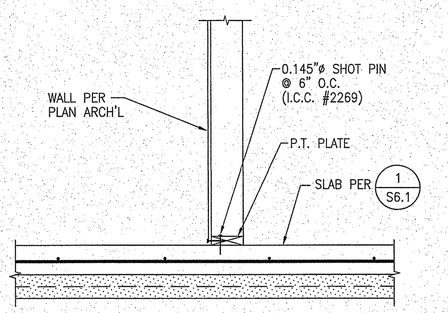

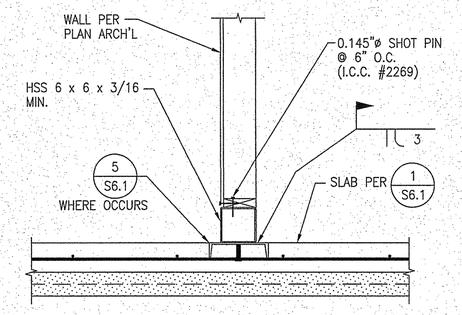

X (9) WALL SUPPORT AT SLAB (6) WALL SUPPORT AT STEEL TUBE (3)

IDENTIFICATION STAMP DIV. OF THE STATE ARCHITECT
02 117009
AC ___ FLS ___ SS ___
DATE 7/23/18

STRUCTURAL ENGINEER OF RECORD
ORION
Structural Engineering, Inc.
12257 OLD POMERADO ROAD, SUITE A
POWAY, CA 92064
PHONE (858) 679-1974
FAX (858) 679 1975
FILE # PO-JTS

IDENTIFICATION STAMP
DIV. OF THE STATE ARCHITECT
OFFICE OF REGULATION SERVICES
02-113899
AC ___ FLS ___ SS ___
DATE 3/19/15

PC

JTS MODULAR INC.
• A BETTER WAY TO BUILD •
COMMERCIAL INSTITUTIONAL AND RESIDENTIAL MODULAR BUILDINGS DESIGN & PLANNING

7001 Mc Divitt Dr.
Bakersfield, CA 93313
Office: (661) 835-9270
Plant: (661) 833-2940
Fax: (661) 847-1007
www.jtsmodular.com

SLAB ON GRADE CLASSROOM PC

REGISTERED PROFESSIONAL ENGINEER RYAN J. OMER No. S 4437 EXP. 12/31/16 STRUCTURAL STATE OF CALIFORNIA

REVISIONS DESCRIPTION: DATE:

CLIENT NAME:
DRAWN BY: B.N.
CHECKED BY: R.J.O.
JOB NUMBER:
DATE: 01/12/2015
SCALE: AS NOTED

SHEET NAME
TYPICAL DETAILS

SHEET NO.
S1.5

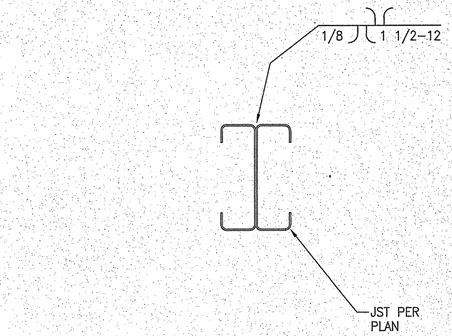

DOUBLE JOIST CONNECTION 8

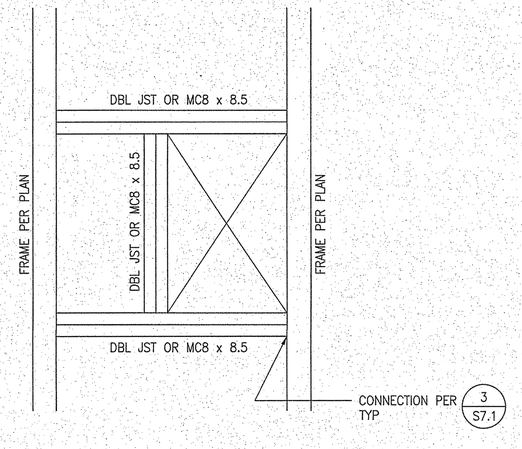

MECHANICAL UNIT SUPPORT AT ROOF 5

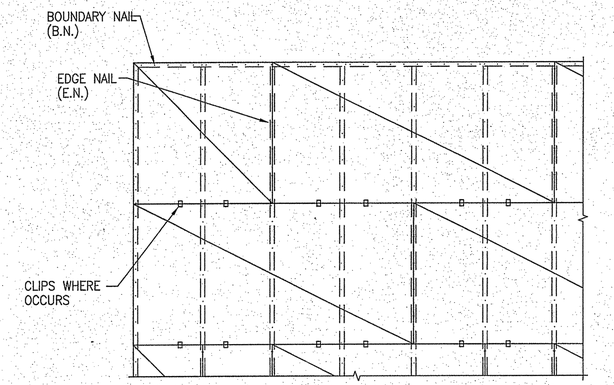

NOTES:

1. PLYWOOD SHEATHING SHALL BE LAID PERPENDICULAR TO FRAMING WITH 4'–0" STAGGERED JOINTS.
2. MINIMUM PLYWOOD SHEET SIZE SHALL BE 2'–0" x 4'–0".
3. MINIMUM 3/8" NAILING EDGE DISTANCE.
4. BOUNDARY NAIL (B.N.) OVER ALL BEAMS, AND AROUND ALL OPENINGS.
5. PLYWOOD NAILING SHALL BE INSPECTED BY THE GOVERNING BUILDING AUTHORITY PRIOR TO COVERING.

DIAPHRAGM LAYOUT 6

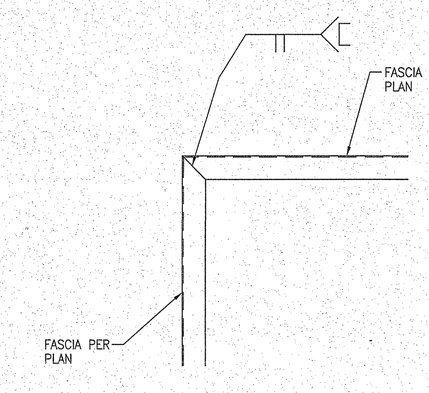

FASCIA BUTT JOINT 3

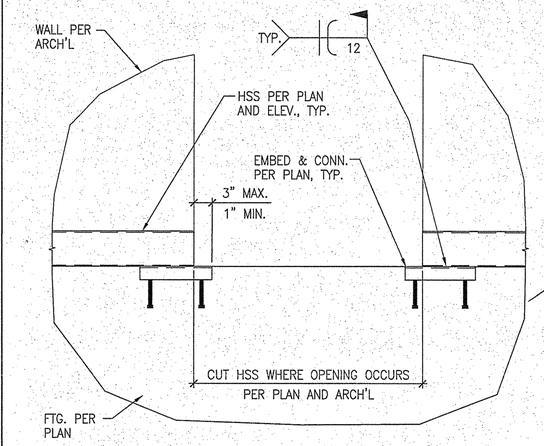

CONNECTION AT DOOR OPENING 2

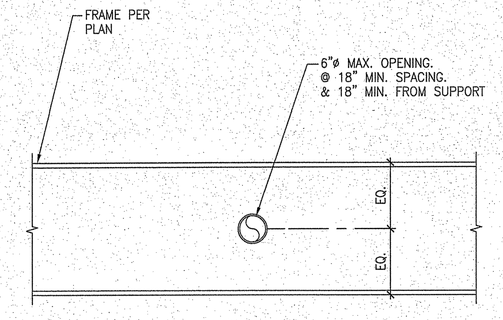

HOLE THROUGH BEAM 9

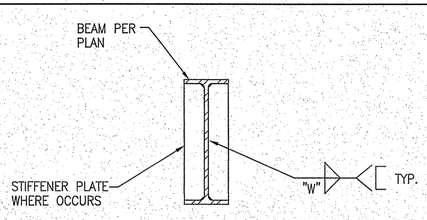

STIFFENER PLATE SCHEDULE

STIFFENER PLATE THICKNESS	WELD "W"	REMARKS
3/16"	3/16"	
1/4"	3/16"	
5/16"	3/16"	
3/8"	3/16"	
1/2"	1/4"	

TYP. STIFFENER PLATE 7

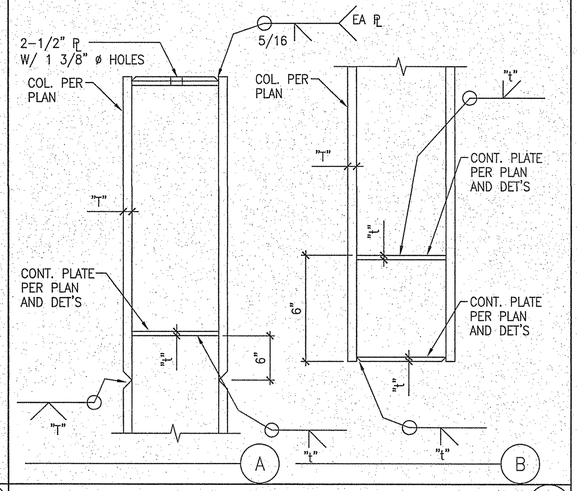

TYP. COLUMN PREP. 4

JTS MODULAR INC
• A BETTER WAY TO BUILD •
COMMERCIAL INSTITUTIONAL AND RESIDENTIAL MODULAR BUILDINGS DESIGN & PLANNING
7001 Mc Divitt Dr.
Bakersfield, CA 93313
Office: (661) 835-9270
Plant: (661) 833-2940
Fax: (661) 847-1007
www.jtsmodular.com

SLAB ON GRADE CLASSROOM PC #

REGISTERED PROFESSIONAL ENGINEER BRIAN J. ORION No. S-6897 EXP. 12/31/18 STRUCTURAL STATE OF CALIFORNIA

DATE:

REVISIONS DECRIPTION:

CLIENT NAME:
DRAWN BY: B.N.
CHECKED BY: R.J.O.
JOB NUMBER:
DATE: 08/12/2014
SCALE: AS NOTED

IDENTIFICATION STAMP DIV. OF THE STATE ARCHITECT
OZ 117009
AC. FLS. SS
DATE 7/23/18

STRUCTURAL ENGINEER OF RECORD

ORION Structural Engineering, INC.
12257 OLD POMERADO ROAD, SUITE A
POWAY, CA 92064
PHONE (858) 679-1974
FAX (858) 679-1975

FILE # PC-STK

IDENTIFICATION STAMP
DIV. OF THE STATE ARCHITECT
OFFICE OF REGULATION SERVICES
OZ-113899
AC. FLS. SS
DATE 3/19/15

PC

SHEET NAME
TYPICAL DETAILS

SHEET NO.
S1.6

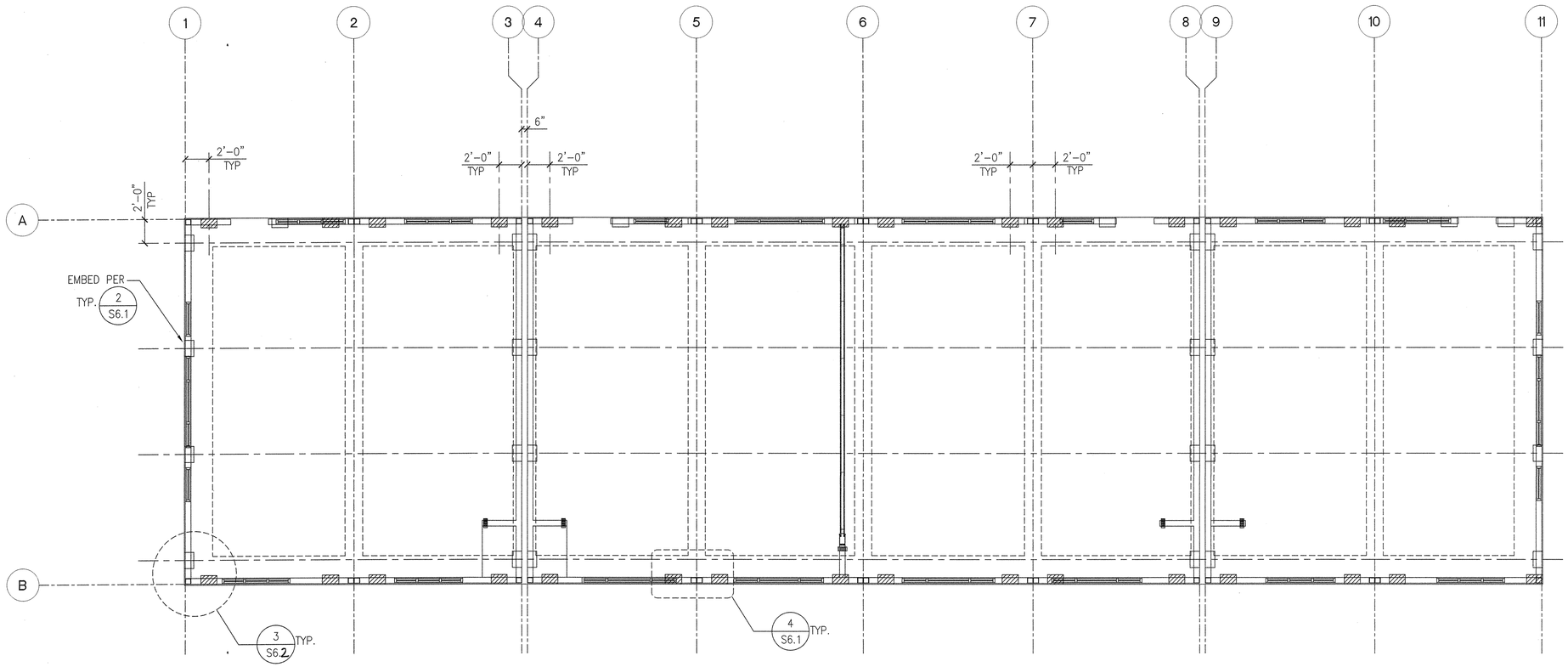

EMBEDMENT PLAN

SCALE 3/16" = 1'-0"

NOTES:

1. FOR TYPICAL DETAILS AND GENERAL NOTES, SEE SHEETS S1.1, S1.2, S1.3, S1.4, S1.5, ~~S1.5A~~, S1.6., ~~AND S1.7~~
2. FOR DIMENSIONS NOT SHOWN, SEE ARCHITECTURAL.
3. ▭ FOR CONNECTIONS TO EMBED. 2/S6.1 SEE 7/S6.1
4. ▨ FOR CONNECTIONS TO EMBED. 3/S6.1 SEE 8/S6.1
5. ▥ FOR CONNECTIONS TO EMBED. 5/S6.1 SEE 3/S1.5

JTS MODULAR
DESIGN • BUILD • TRANSPORT • ENJOY
7001 MC Divit DRIVE
BAKERSFIELD, CA 93313
WWW.JTSMODULAR.COM
OFFICE: (661) 835-9270

STRUCTURAL ENGINEER OF RECORD
ORION
Structural Engineering, Inc.
11305 RANCHO BERNARDO RD
SUITE 121
SAN DIEGO CA. 92127
PHONE (858) 679-1974

REGISTERED PROFESSIONAL ENGINEER RYAN J. ORR 64437 EXP. 12/31/18 STRUCTURAL STATE OF CALIFORNIA

MONSON - SULTANA ELEMENTARY SCHOOL
CLASSROOMS - SLAB ON GRADE PC (02-113899)
10643 AVENUE 416, DINUBA, CA 93618
MONSON - SULTANA JOINT UNION ELEMENTARY SCHOOL DISTRICT

APPL # _____
FILE # _____
AC_____ FLS_____ SS_____
DATE_____

IDENTIFICATION STAMP
DIVISION OF THE STATE ARCHITECT
PRE CHECK (PC) DOCUMENT
CODE 2016 CBC
A SEPERATE PROJECT APPLICATION
FOR CONSTRUCTION IS REQUIRED

APPL # 02-117089
FILE # 54-62
AC_____ FLS_____ SS 17
DATE 7/23/18

JTS JOB#: MONSON SALTANA
DATE: 7/16/2018

EMBEDMENT PLAN

S2.1R

NOTES:

1. FOR TYPICAL DETAILS AND GENERAL NOTES, SEE SHEETS S1.1, S1.2, S1.3, S1.4, S1.5, AND S1.6., AND S1.5A
2. FOR DIMENSIONS NOT SHOWN, SEE ARCHITECTURAL.

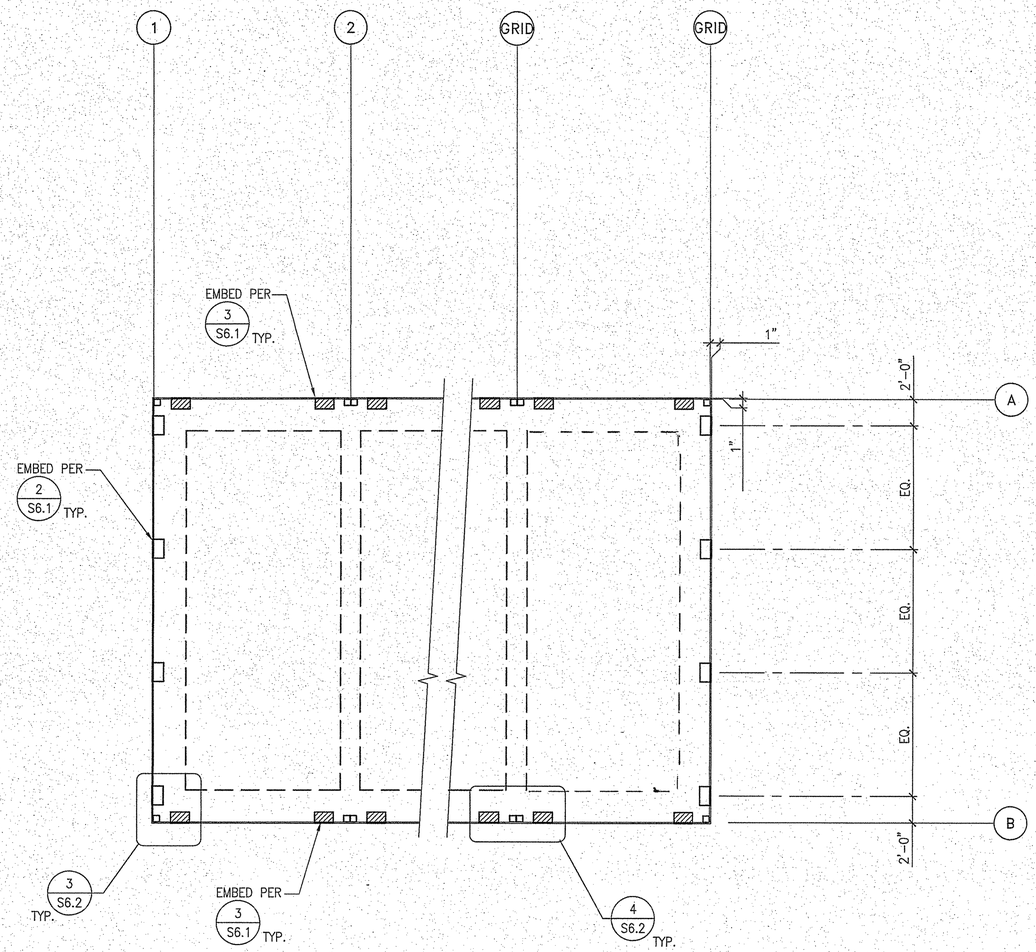

FOR REFERENCE ONLY

EMBEDMENT PLAN

SCALE 3/16" = 1'-0"

JTS MODULAR INC
• A BETTER WAY TO BUILD •
COMMERCIAL INSTITUTIONAL AND RESIDENTIAL MODULAR BUILDINGS DESIGN & PLANNING
7001 Mc Divitt Dr.
Bakersfield, CA 93313
Office: (661) 835-9270
Plant: (661) 833-2940
Fax: (661) 847-1007
www.jtsmodular.com

SLAB ON GRADE CLASSROOM PC #

REGISTERED PROFESSIONAL ENGINEER RYAN J. OMER No. S 4427 EXP. 12/31/16 STRUCTURAL STATE OF CALIFORNIA

REVISIONS DESCRIPTION:	DATE:

CLIENT NAME:	
DRAWN BY:	B.N.
CHECKED BY:	R.J.O.
JOB NUMBER:	
DATE:	01/12/2015
SCALE:	AS NOTED

SHEET NAME
EMBEDMENT PLAN

SHEET NO.
S2.1

STRUCTURAL ENGINEER OF RECORD

ORION Structural Engineering, Inc.
12257 OLD POMERADO ROAD, SUITE A
POWAY, CA 92064
PHONE (858) 679-1974
FAX (858) 679-1975

IDENTIFICATION STAMP DIV. OF THE STATE ARCHITECT
02 1 0 0 9
AC. FLS SS
DATE 7/23/16

IDENTIFICATION STAMP
DIV. OF THE STATE ARCHITECT
OFFICE OF REGULATION SERVICES
02-113899
AC. FLS SS
DATE 3/19/15

PC

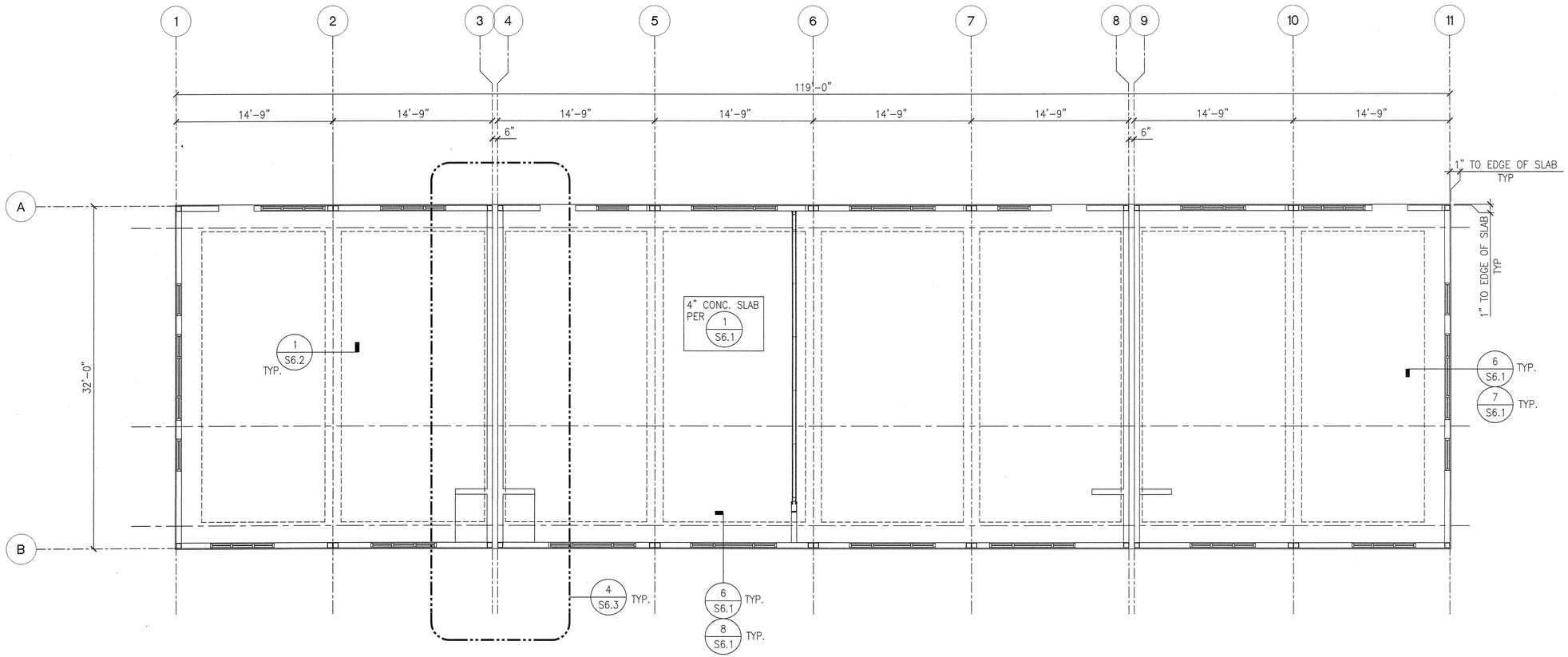

FOUNDATION PLAN

SCALE 3/16" = 1'-0"

NOTES:

1. FOR TYPICAL DETAILS AND GENERAL NOTES, SEE SHEETS S1.1, S1.2, S1.3, S1.4, S1.5, ~~S1.5A~~, S1.6., ~~AND S1.7~~
2. FOR DIMENSIONS NOT SHOWN, SEE ARCHITECTURAL.

JTS MODULAR
DESIGN • BUILD • TRANSPORT • ENJOY
7001 MC Divit DRIVE
BAKERSFIELD, CA 93313
WWW.JTSMODULAR.COM
OFFICE: (661) 835-9270

STRUCTURAL ENGINEER OF RECORD
ORION
Structural Engineering, Inc.
11305 RANCHO BERNARDO RD
SUITE 121
SAN DIEGO CA. 92127
PHONE (858) 679-1974

REGISTERED PROFESSIONAL ENGINEER
RYAN J. ORR
No. S4437
EXP. 12/31/18
STRUCTURAL
STATE OF CALIFORNIA

MONSON - SULTANA ELEMENTARY SCHOOL
CLASSROOMS - SLAB ON GRADE PC (02-113899)
10643 AVENUE 416, DINUBA, CA 93618
MONSON - SULTANA JOINT UNION ELEMENTARY SCHOOL DISTRICT

APPL # _____
FILE # _____
AC_____ FLS_____ SS_____
DATE_____

IDENTIFICATION STAMP
DIVISION OF THE STATE ARCHITECT
PRE CHECK (PC) DOCUMENT
CODE 2016 CBC
A SEPERATE PROJECT APPLICATION
FOR CONSTRUCTION IS REQUIRED

APPL # 02-117009
FILE # 59-62
AC_____ FLS_____ SS_____
DATE 7/23/18

JTS JOB#: MONSON SALTANA
DATE: 7/16/2018

FOUNDATION PLAN

S3.1-R

NOTES:

1. FOR TYPICAL DETAILS AND GENERAL NOTES, SEE SHEETS S1.1, S1.2, S1.3, S1.4, S1.5, AND S1.6., AND S1.5A
2. FOR DIMENSIONS NOT SHOWN, SEE ARCHITECTURAL.

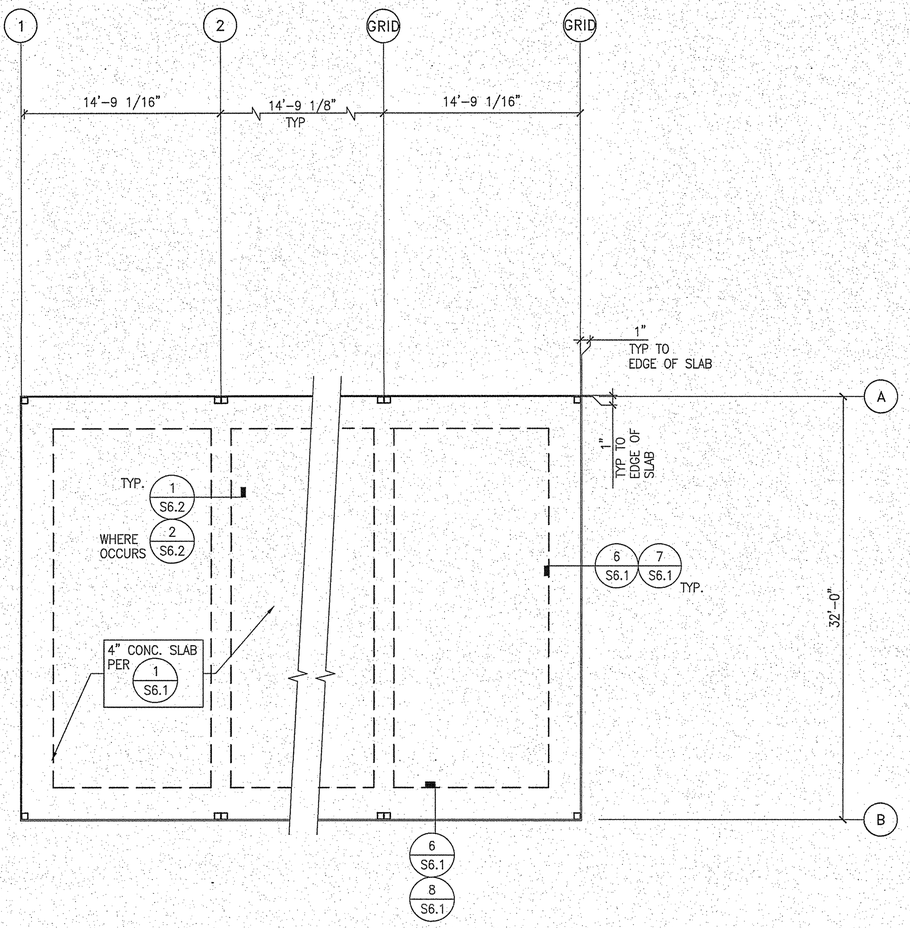

FOR REFERENCE ONLY

FOUNDATION PLAN

SCALE 3/16" = 1'-0"

JTS MODULAR INC.
• A BETTER WAY TO BUILD •

COMMERCIAL
INSTITUTIONAL
AND
RESIDENTIAL
MODULAR
BUILDINGS
DESIGN &
PLANNING

7001 Mc Divitt Dr.
Bakersfield, CA 93313
Office: (661) 835-9270
Plant: (661) 833-2940
Fax: (661) 847-1007
www.jtsmodular.com

SLAB ON GRADE
CLASSROOM PC
#

REGISTERED PROFESSIONAL ENGINEER
RYAN J. OMER
No. S 4457
EXP. 12/31/16
STRUCTURAL
STATE OF CALIFORNIA

REVISIONS DESCRIPTION:	DATE:

CLIENT NAME:
DRAWN BY: B.N.
CHECKED BY: R.J.O.
JOB NUMBER:
DATE: 01/12/2015
SCALE: AS NOTED

SHEET NAME
FOUNDATION PLAN

SHEET NO.
S3.1

STRUCTURAL ENGINEER OF RECORD
ORION
Structural Engineering, Inc.
12257 OLD POMERADO ROAD, SUITE A
POWAY, CA 92064
PHONE (858) 679-1974
FAX (858) 679 1975

IDENTIFICATION STAMP
DIV. OF THE STATE ARCHITECT
02 111889
AC FLS SS
DATE

PC

IDENTIFICATION STAMP
DIV. OF THE STATE ARCHITECT
OFFICE OF REGULATION SERVICES
02. 113899
AC FLS SS
DATE 3/19/15

NOTES:

1. FOR TYPICAL DETAILS AND GENERAL NOTES, SEE SHEETS S1.1, S1.2, S1.3, S1.4, S1.5, AND S1.6.,AND S1.5A
2. FOR DIMENSIONS NOT SHOWN, SEE ARCHITECTURAL.
3. FOR MECH'L SIZE AND LOCATION, SEE MECH'L AND ARCH'L DRAWINGS.

LEGEND:

INDICATES FRAME ELEVATION

INDICATES MOMENT CONNECTION

INDICATES BRACE

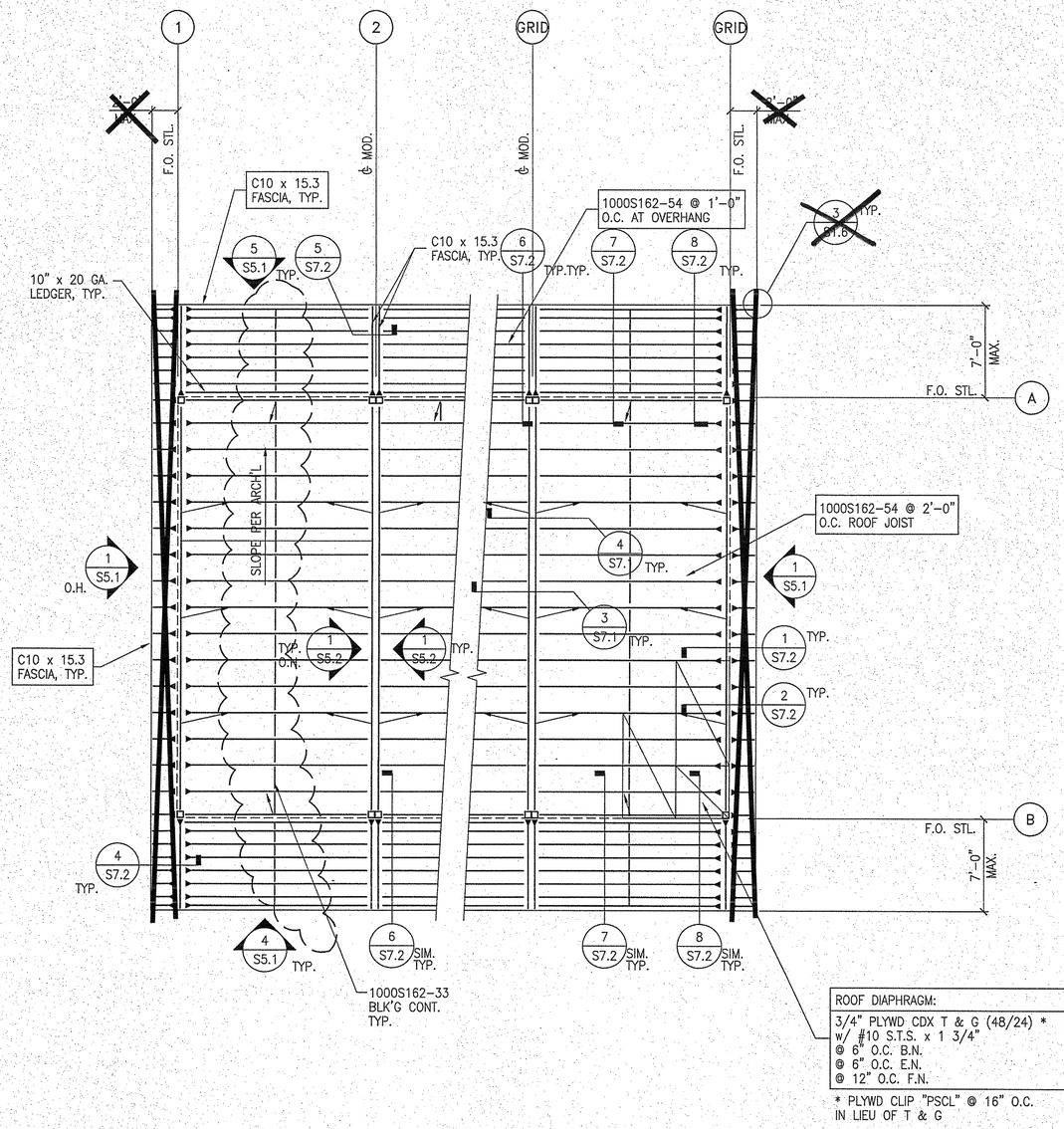

ROOF DIAPHRAGM:
3/4" PLYWD CDX T & G (48/24) * w/ #10 S.T.S. x 1 3/4" @ 6" O.C. B.N. @ 6" O.C. E.N. @ 12" O.C. F.N.

* PLYWD CLIP "PSCL" @ 16" O.C. IN LIEU OF T & G

ROOF FRAMING PLAN – SINGLE SLOPE – OVERHANG

SCALE 3/16" = 1'-0"

JTS MODULAR INC
• A BETTER WAY TO BUILD •
COMMERCIAL INSTITUTIONAL AND RESIDENTIAL MODULAR BUILDINGS DESIGN & PLANNING
7001 Mc Divitt Dr.
Bakersfield, CA 93313
Office: (661) 835-9270
Plant: (661) 833-2940
Fax: (661) 847-1007
www.jtsmodular.com

SLAB ON GRADE CLASSROOM PC

#

REGISTERED PROFESSIONAL ENGINEER RYAN J. OMER No. S 4432 EXP. 12/31/16 STRUCTURAL STATE OF CALIFORNIA

REVISIONS DESCRIPTION:	DATE:

CLIENT NAME:
DRAWN BY: B.N.
CHECKED BY: R.J.O.
JOB NUMBER:
DATE: 01/12/2015
SCALE: AS NOTED

STRUCTURAL ENGINEER OF RECORD
ORION Structural Engineering, Inc.
12257 OLD POMERADO ROAD, SUITE A
POWAY, CA 92064
PHONE (858) 679-1974
FAX (858) 679 1975

IDENTIFICATION STAMP DIV. OF THE STATE ARCHITECT
02 117009
AC ___ FLS ___ SS ___
DATE 7/23/18

FILE # PC-JTS

IDENTIFICATION STAMP DIV. OF THE STATE ARCHITECT OFFICE OF REGULATION SERVICES
02-113899
AC ___ FLS ___ SS ___
DATE 3/19/15

PC

SHEET NAME
ROOF FRM'G PLAN SINGLE SLOPE OVERHANG

SHEET NO.
S4.1

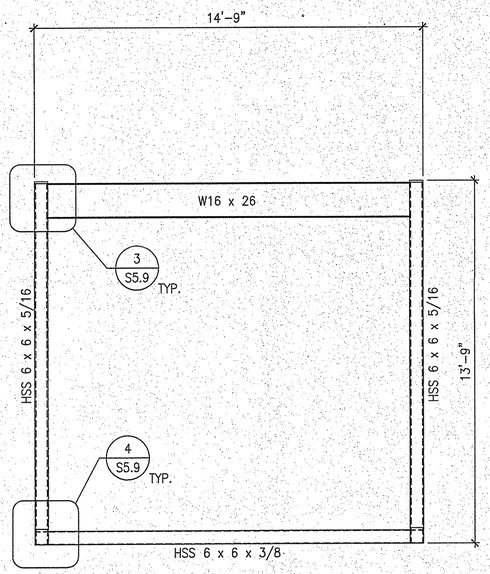

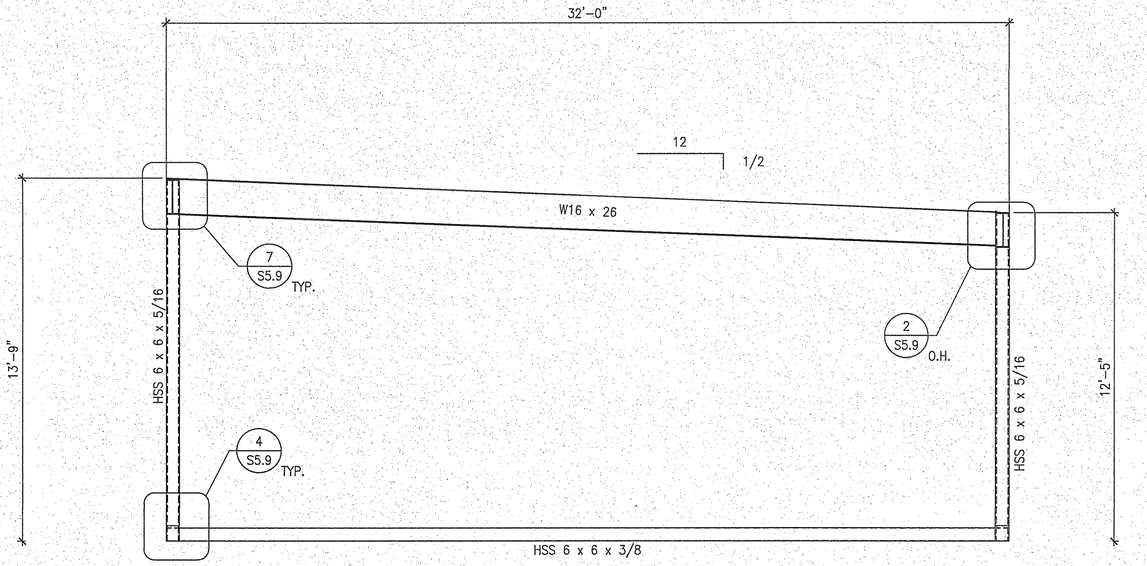

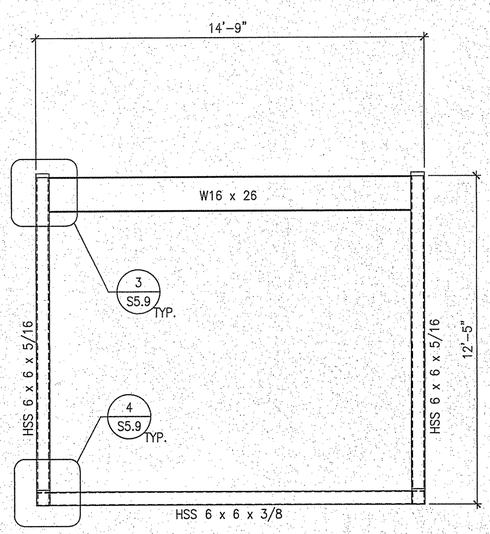

X 4

X 1

X 5

X 3

X 2

JTS
MODULAR INC.
• A BETTER WAY TO BUILD •

COMMERCIAL
INSTITUTIONAL
AND
RESIDENTIAL
MODULAR
BUILDINGS
DESIGN &
PLANNING

7001 Mc Divitt Dr.
Bakersfield, CA 93313
Office: (661) 835-9270
Plant: (661) 833-2940
Fax: (661) 847-1007
www.jtsmodular.com

SLAB ON GRADE
CLASSROOM PC
#

REGISTERED PROFESSIONAL ENGINEER
RAM J. GREWAL
No. S 4429
EXP. 12/31/16
STRUCTURAL
STATE OF CALIFORNIA

DATE:
REVISIONS DESCRIPTION:

CLIENT NAME:
DRAWN BY: B.N.
CHECKED BY: R.J.G.
JOB NUMBER:
DATE: 01/12/2015
SCALE: AS NOTED

SHEET NAME
FRAME
ELEVATIONS
AND DETAILS
SINGLE SLOPE

SHEET NO.
S5.1

STRUCTURAL ENGINEER OF RECORD
ORION
Structural Engineering, Inc.
12257 OLD POWERLINE ROAD, SUITE A
POWAY, CA 92064
PHONE (858) 679-1974
FAX (858) 679 1975

IDENTIFICATION STAMP
DIV. OF THE STATE ARCHITECT
O2 117009
AC FLS SS
DATE 7/27/18

PC

Case # PC-JTS
IDENTIFICATION STAMP
DIV. OF THE STATE ARCHITECT
OFFICE OF REGULATION SERVICES
02-119899
AC FLS SS
DATE 3/19/15

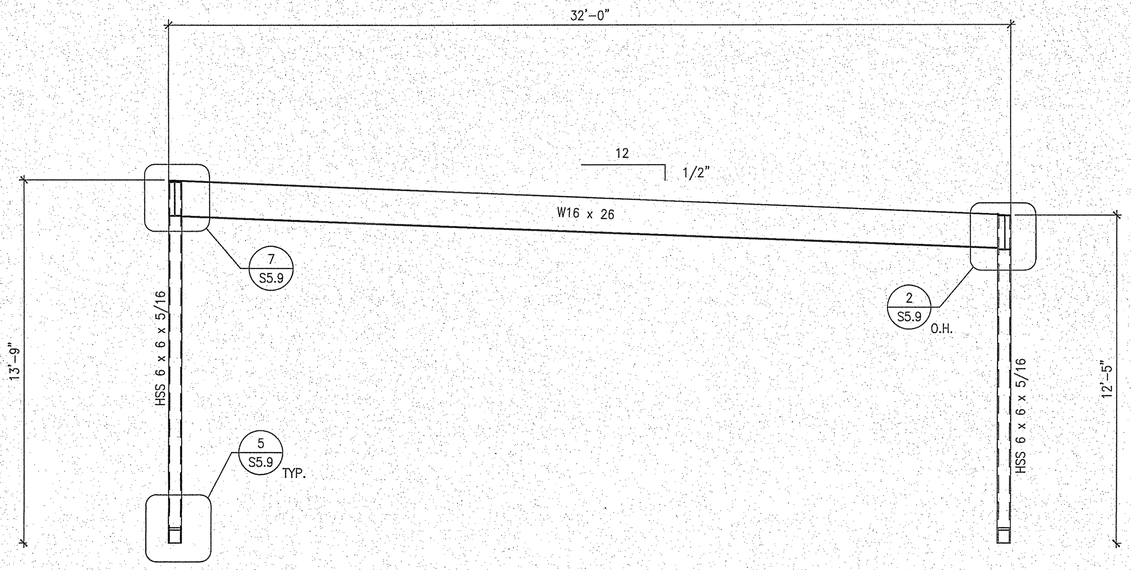

X 4

X 1

X 5

X 3

X 2

JTS MODULAR INC.
• A BETTER WAY TO BUILD •

COMMERCIAL
INSTITUTIONAL
AND
RESIDENTIAL
MODULAR
BUILDINGS
DESIGN &
PLANNING

7001 Mc Divitt Dr.
Bakersfield, CA 93313
Office: (661) 835-9270
Plant: (661) 833-2940
Fax: (661) 847-1007
www.jtsmodular.com

SLAB ON GRADE
CLASSROOM PC
#

REGISTERED PROFESSIONAL ENGINEER
RYAN J. ORION
No. S 4417
EXP. 10/31/16
STRUCTURAL
STATE OF CALIFORNIA

REVISIONS DESCRIPTION: | DATE:

CLIENT NAME:
DRAWN BY: B.N.
CHECKED BY: R.J.O.
JOB NUMBER:
DATE: 01/12/2015
SCALE: AS NOTED

SHEET NAME
FRAME
ELEVATIONS
AND DETAILS
SINGLE SLOPE

SHEET NO.
S5.2

STRUCTURAL ENGINEER OF RECORD
ORION
Structural Engineering, Inc.
12257 OLD POWAY ROAD, SUITE A
POWAY, CA 92064
PHONE (858) 679-1974
FAX (858) 679 1975

IDENTIFICATION STAMP
DIV. OF THE STATE ARCHITECT
02 117009
AC FLS SS
DATE 7/23/14

PC

IDENTIFICATION STAMP
DIV. OF THE STATE ARCHITECT
OFFICE OF REGULATION SERVICES
02-113899
AC FLS SS
DATE 3/19/15

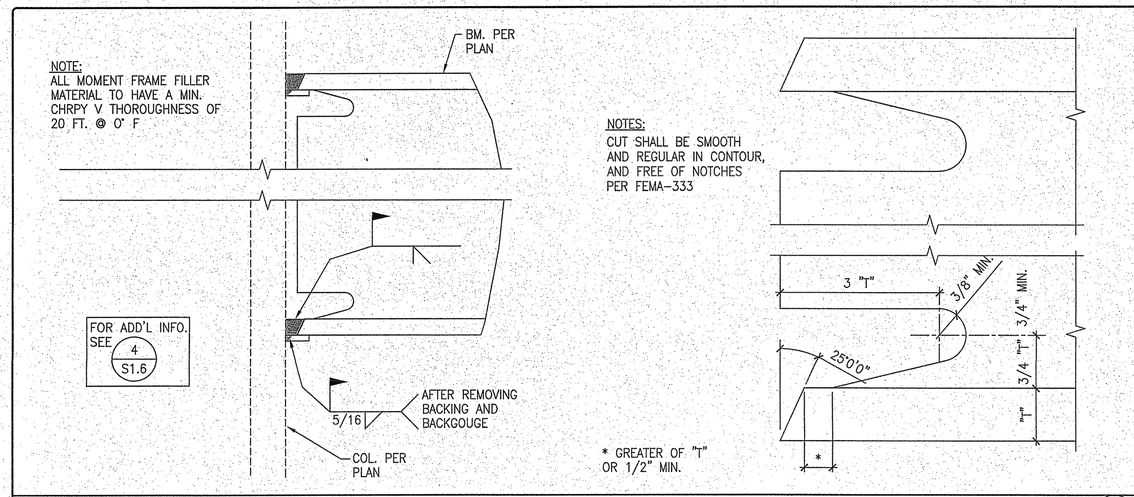

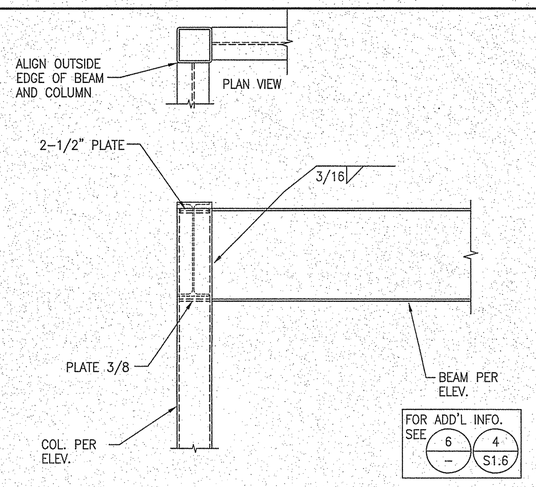

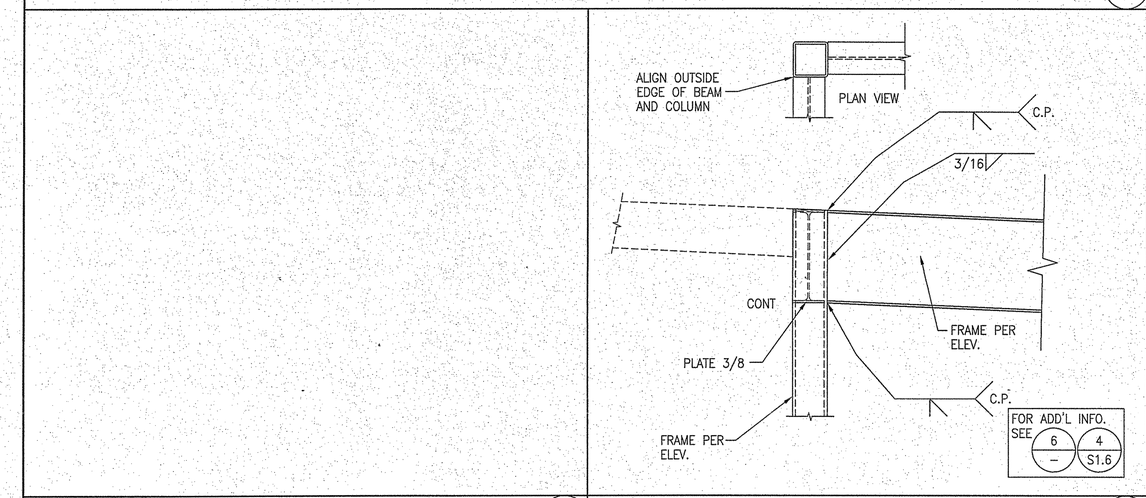

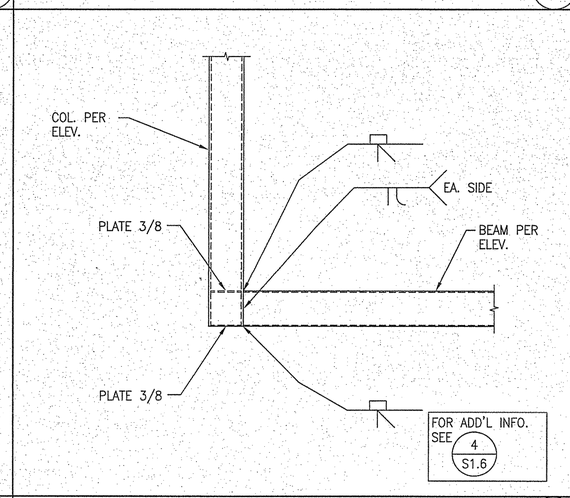

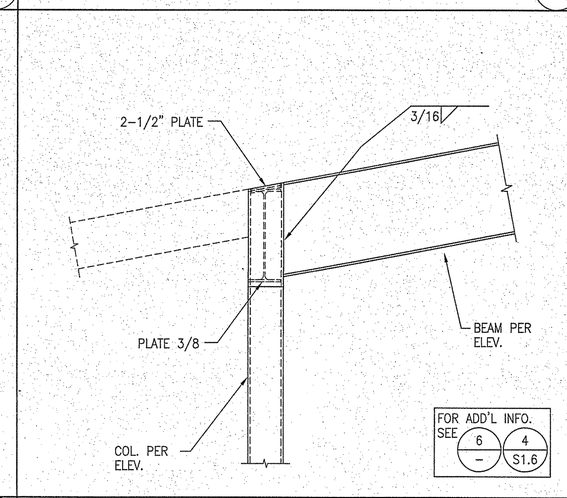

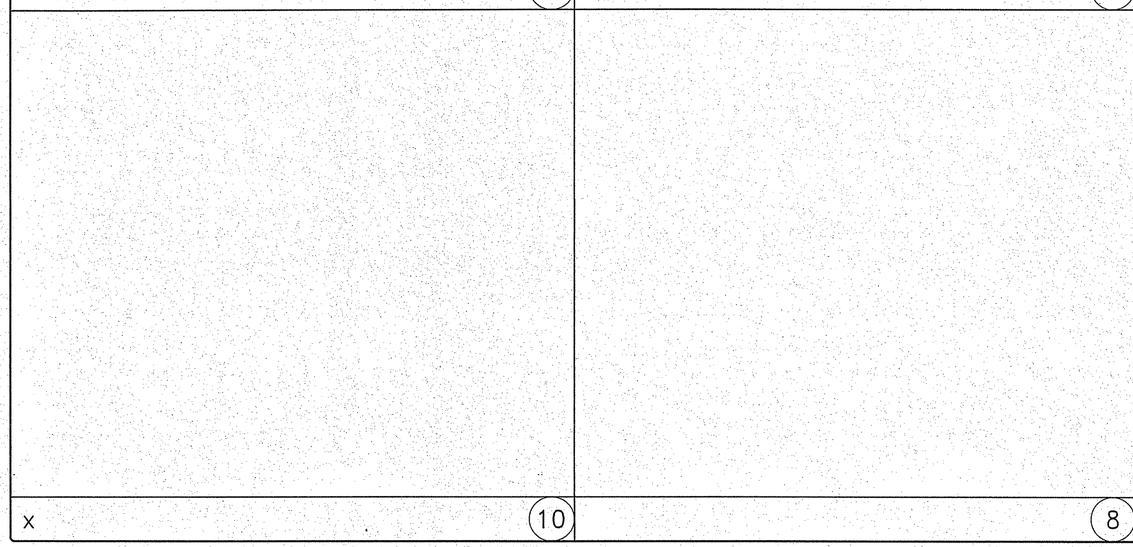

JTS MODULAR INC
• A BETTER WAY TO BUILD •

COMMERCIAL INSTITUTIONAL AND RESIDENTIAL MODULAR BUILDINGS DESIGN & PLANNING

7001 Mc Divitt Dr.
Bakersfield, CA 93313
Office: (661) 835-9270
Plant: (661) 833-2940
Fax: (661) 847-1007
www.jtsmodular.com

SLAB ON GRADE CLASSROOM PC

#

REGISTERED PROFESSIONAL ENGINEER
RYAN J. OMER
No. S 4433
EXP. 12/31/14
STRUCTURAL
STATE OF CALIFORNIA

REVISIONS DESCRIPTION:
DATE:

CLIENT NAME:
DRAWN BY: B.N.
CHECKED BY: R.J.O.
JOB NUMBER:
DATE: 01/12/2015
SCALE: AS NOTED

STRUCTURAL ENGINEER OF RECORD
ORION
Structural Engineering, Inc.
12257 OLD POMERADO ROAD, SUITE A
POWAY, CA 92064
PHONE (858) 679-1974
FAX (858) 679 1975

IDENTIFICATION STAMP
DIV. OF THE STATE ARCHITECT
02 117009
AC FLS SS
DATE 7/23/18

PC

FILE # 02-JTS
IDENTIFICATION STAMP
DIV. OF THE STATE ARCHITECT
OFFICE OF REGULATION SERVICES
02-113899
AC FLS SS
DATE 8/14/15

SHEET NAME
FRAME DETAILS

SHEET NO.
S5.9

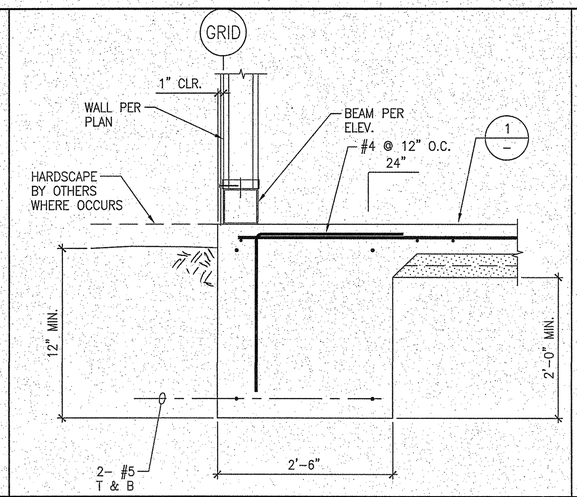

9

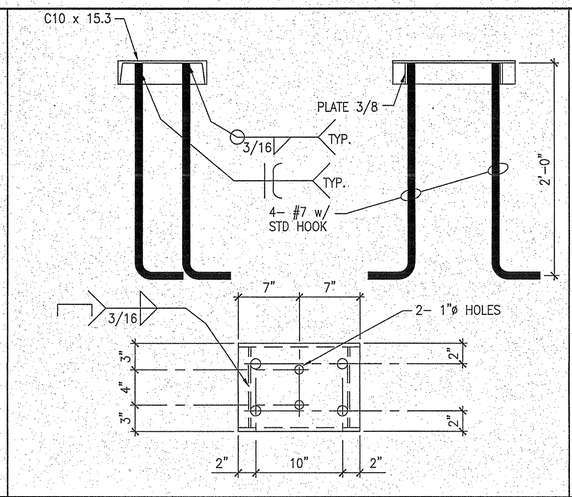

6

3

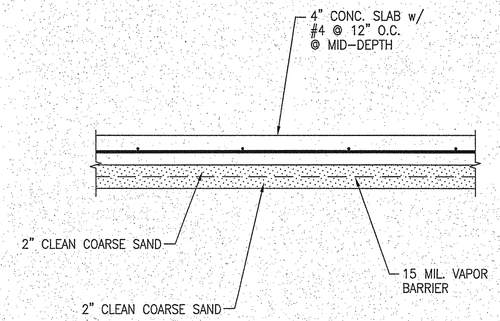

1

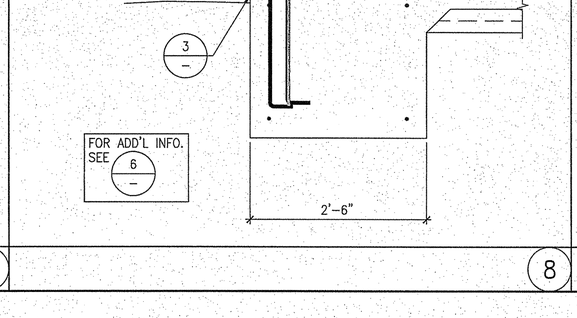

10

7

4

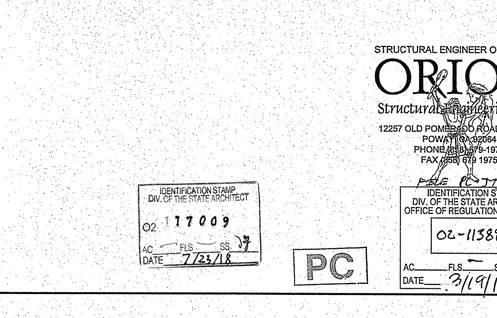

2

X

11

8

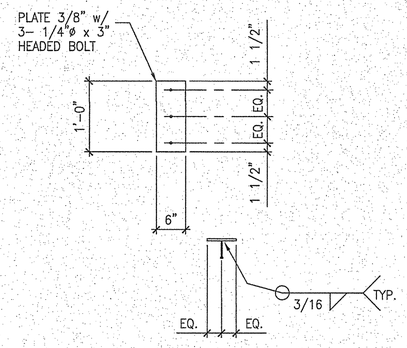

5

JTS MODULAR INC
• A BETTER WAY TO BUILD •
COMMERCIAL INSTITUTIONAL AND RESIDENTIAL MODULAR BUILDINGS DESIGN & PLANNING
7001 Mc Divitt Dr.
Bakersfield, CA 93313
Office: (661) 835-9270
Plant: (661) 833-2940
Fax: (661) 847-1007
www.jtsmodular.com

SLAB ON GRADE
CLASSROOM PC #

REGISTERED PROFESSIONAL ENGINEER
RYAN J. OMES
No. S 4437
EXP. 12/31/16
STRUCTURAL
STATE OF CALIFORNIA

DATE:

REVISIONS DESCRIPTION:

CLIENT NAME:
DRAWN BY: B.N.
CHECKED BY: R.J.O.
JOB NUMBER:
DATE: 01/12/2015
SCALE: AS NOTED

SHEET NAME
FOUNDATION DETAILS

SHEET NO.
S6.1

STRUCTURAL ENGINEER OF RECORD
ORION Structural Engineering, Inc.
12257 OLD POMERADO ROAD, SUITE A
POWAY, CA 92064
PHONE (858) 679-1974
FAX (858) 679 1975

IDENTIFICATION STAMP
DIV. OF THE STATE ARCHITECT
02 17009
AC FLS SS
DATE 7/23/18

PC

IDENTIFICATION STAMP
DIV. OF THE STATE ARCHITECT
OFFICE OF REGULATION SERVICES
02-113899
AC FLS SS
DATE 3/19/15

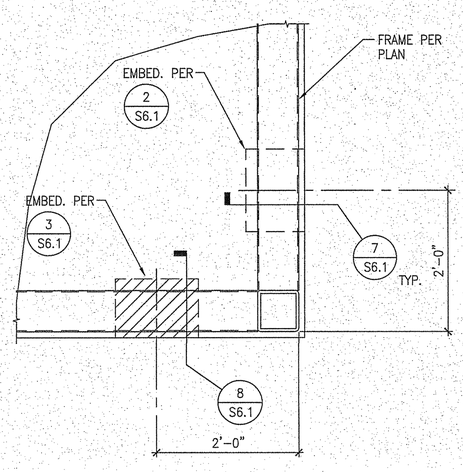

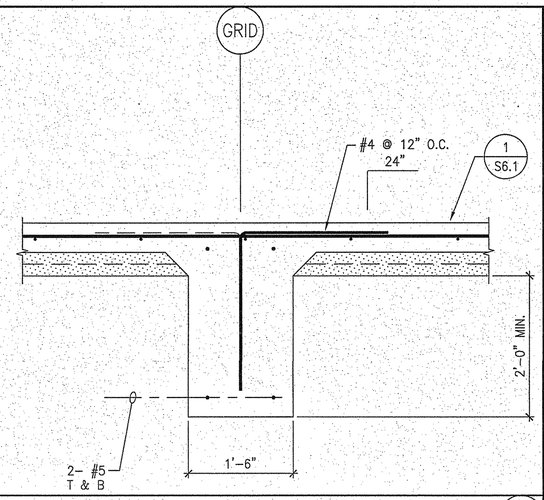

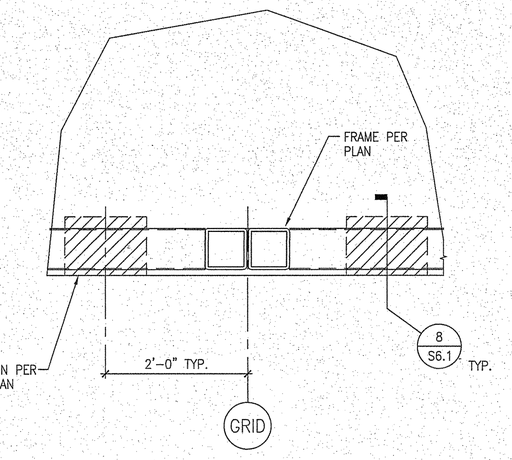

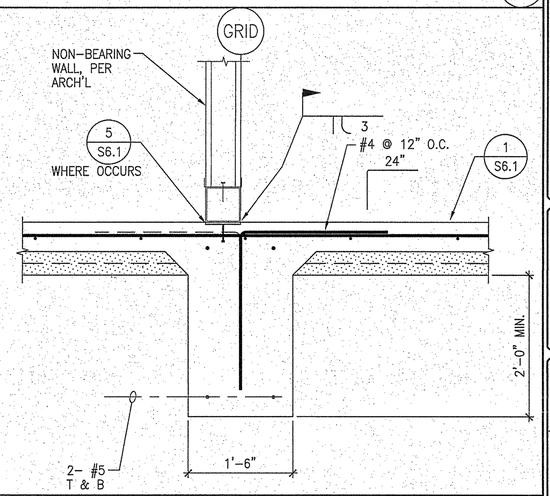

9 6 3 1

10 7 4 2

X 11 8 5

JTS
MODULAR INC
• A BETTER WAY TO BUILD •

COMMERCIAL
INSTITUTIONAL
AND
RESIDENTIAL
MODULAR
BUILDINGS
DESIGN &
PLANNING

7001 Mc Divitt Dr.
Bakersfield, CA 93313
Office: (661) 835-9270
Plant: (661) 833-2940
Fax: (661) 847-1007
www.jtsmodular.com

SLAB ON GRADE
CLASSROOM PC #

REGISTERED PROFESSIONAL ENGINEER
RYAN J. ORION
No. S 4437
EXP. 12/31/18
STRUCTURAL
STATE OF CALIFORNIA

DATE:

REVISIONS DESCRIPTION:

CLIENT NAME:
DRAWN BY: B.N.
CHECKED BY: R.J.O.
JOB NUMBER:
DATE: 01/12/2015
SCALE: AS NOTED

SHEET NAME
FOUNDATION
DETAILS

SHEET NO.
S6.2

STRUCTURAL ENGINEER OF RECORD

ORION
Structural Engineering, Inc.
12257 OLD POMERADO ROAD, SUITE A
POWAY, CA 92064
PHONE (858) 679-1974
FAX (858) 679 1975

IDENTIFICATION STAMP
DIV. OF THE STATE ARCHITECT
02 117009
AC FLS SS
DATE 7/23/18

PC

FILE # PC-JTS
IDENTIFICATION STAMP
DIV. OF THE STATE ARCHITECT
OFFICE OF REGULATION SERVICES
02-113899
AC FLS SS
DATE 3/19/15

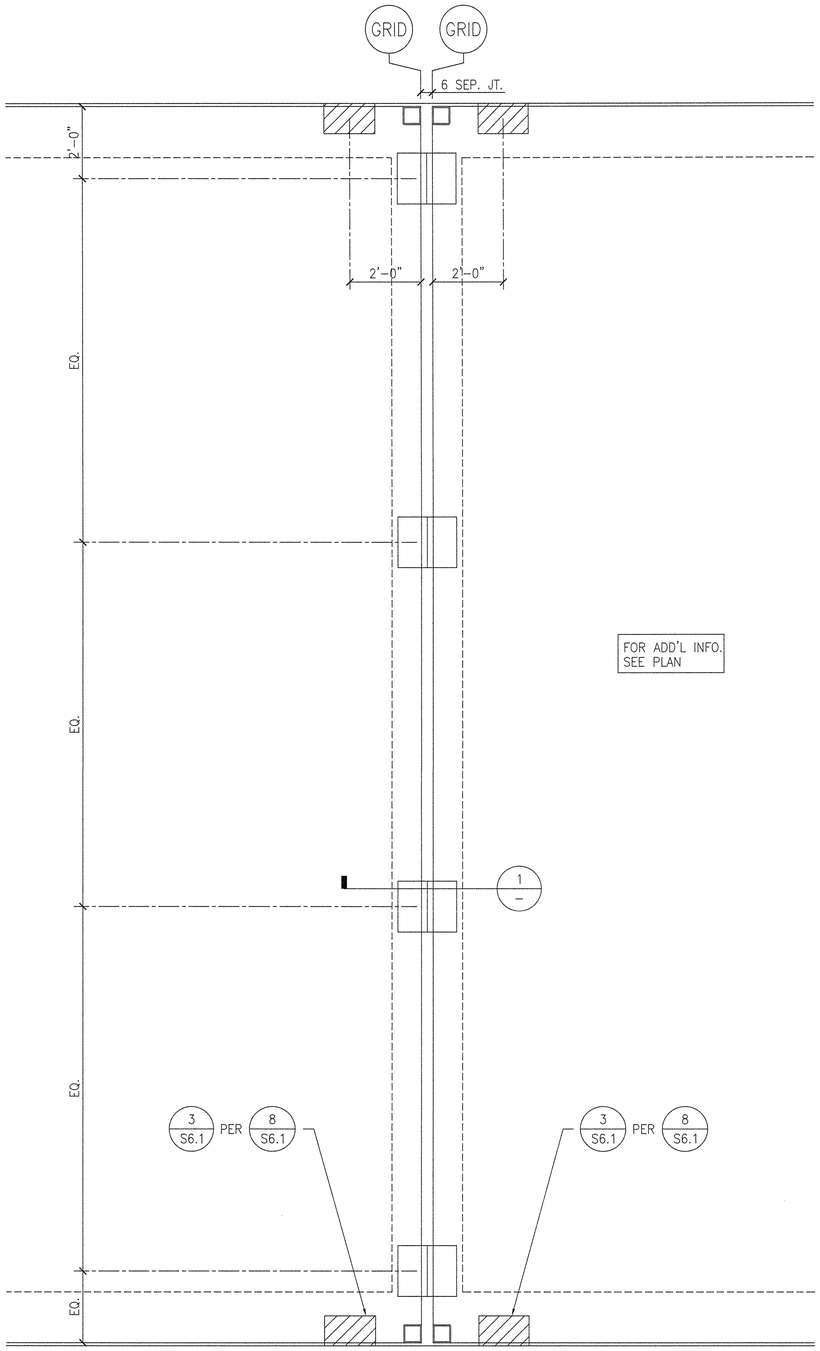

FOR ADD'L INFO.
SEE PLAN

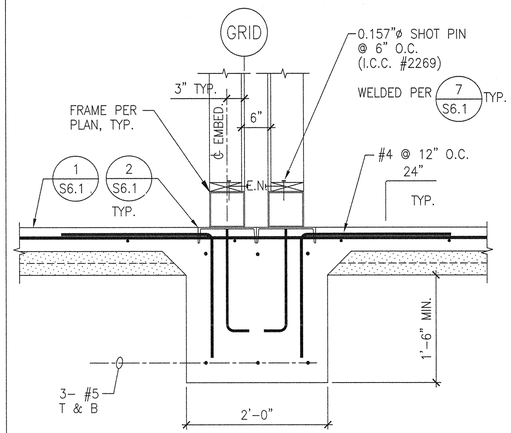

NOTE: PROVIDE ACCESS HOLES ON BOTH WALLS FOR WELDING BETWEEN MODULES

JTS MODULAR
DESIGN • BUILD • TRANSPORT • ENJOY
7001 MC Divitt DRIVE
BAKERSFIELD, CA 93313
WWW.JTSMODULAR.COM
OFFICE: (661) 835-9270

STRUCTURAL ENGINEER OF RECORD
ORION
Structural Engineering, Inc.
11305 RANCHO BERNARDO RD
SUITE 121
SAN DIEGO CA, 92127
PHONE (858) 679-1974

REGISTERED PROFESSIONAL ENGINEER
RYAN J. O'NEIL
14437
EXP. 12/31/19
STRUCTURAL
STATE OF CALIFORNIA

MONSON - SULTANA ELEMENTARY SCHOOL
CLASSROOMS - SLAB ON GRADE PC (02-113899)
10643 AVENUE 416, DINUBA, CA 93618
MONSON - SULTANA JOINT UNION ELEMENTARY SCHOOL DISTRICT

APPL # _____
FILE # _____
AC_____ FLS_____ SS_____
DATE_____

IDENTIFICATION STAMP
DIVISION OF THE STATE ARCHITECT
PRE CHECK (PC) DOCUMENT
CODE 2016 CBC
A SEPERATE PROJECT APPLICATION
FOR CONSTRUCTION IS REQUIRED

APPL # 02-117009
FILE # 54-62
AC_____ FLS_____ SS_____
DATE 7/23/18

JTS JOB#: MONSON SALTANA
DATE: 7/16/2018

FOUNDATION DETAILS

S6.3R

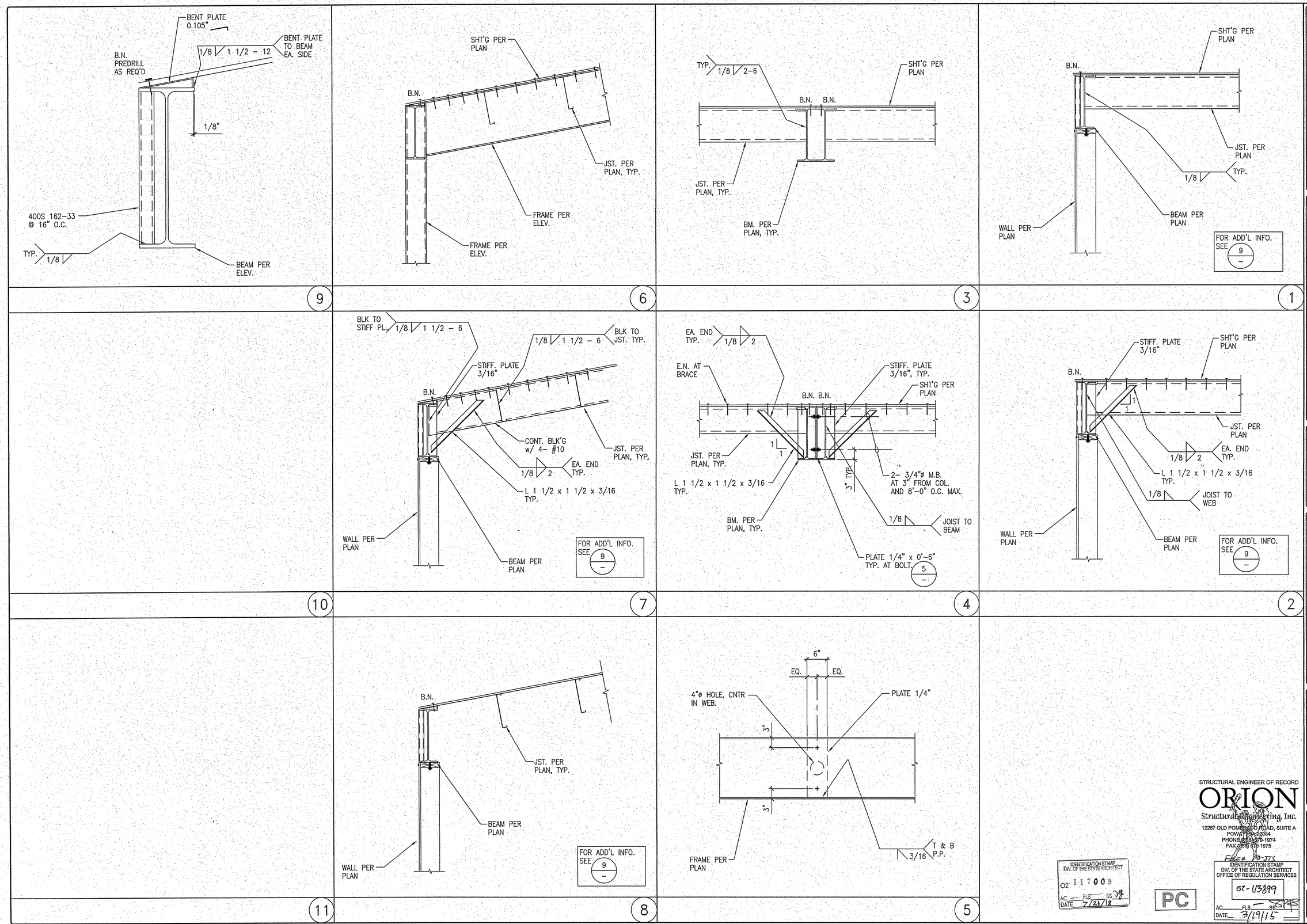

JTS MODULAR INC
• A BETTER WAY TO BUILD •

COMMERCIAL INSTITUTIONAL AND RESIDENTIAL MODULAR BUILDINGS DESIGN & PLANNING

7001 Mc Divitt Dr.
Bakersfield, CA 93313
Office: (661) 835-9270
Plant: (661) 833-2940
Fax: (661) 847-1007
www.jtsmodular.com

SLAB ON GRADE CLASSROOM PC

#

REGISTERED PROFESSIONAL ENGINEER RYAN J. OMER No. S 4439 EXP. 12/31/16 STRUCTURAL STATE OF CALIFORNIA

REVISIONS DESCRIPTION: DATE:

CLIENT NAME:
DRAWN BY: B.N.
CHECKED BY: R.J.O.
JOB NUMBER:
DATE: 01/12/2015
SCALE: AS NOTED

STRUCTURAL ENGINEER OF RECORD
ORION Structural Engineering, Inc.
12257 OLD POMERADO ROAD, SUITE A
POWAY, CA 92064
PHONE (858) 679-1974
FAX (858) 679 1975

IDENTIFICATION STAMP DIV. OF THE STATE ARCHITECT
02 117009
AC FLS SS
DATE 7/23/18

PC

FILE # PO-JTS
IDENTIFICATION STAMP DIV. OF THE STATE ARCHITECT OFFICE OF REGULATION SERVICES
02-113899
AC FLS SS
DATE 3/19/15

SHEET NAME
FRAMING DETAILS

SHEET NO.
S7.1

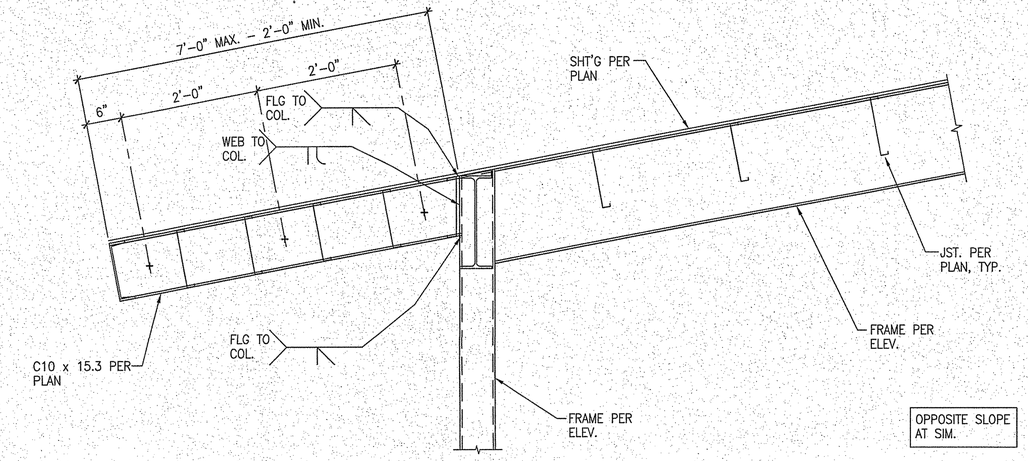

6

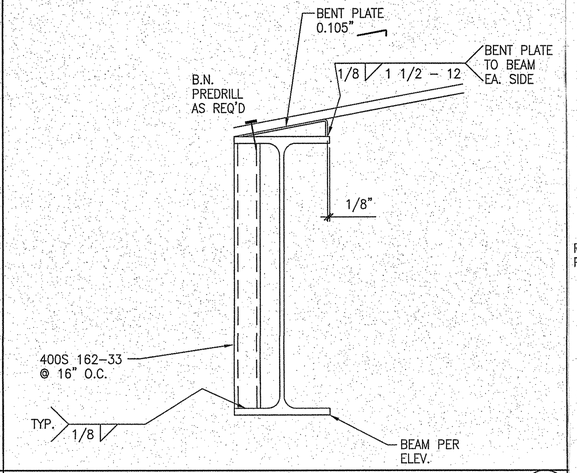

3

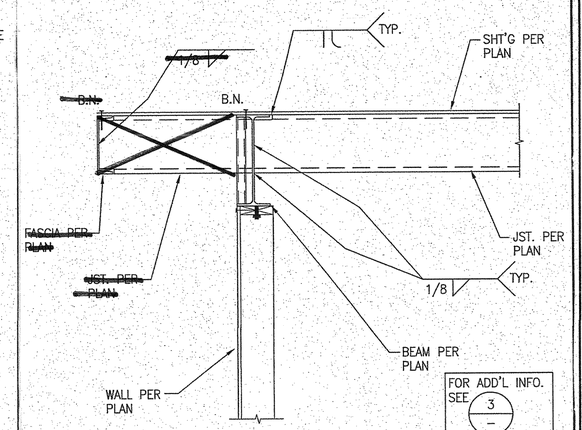

1

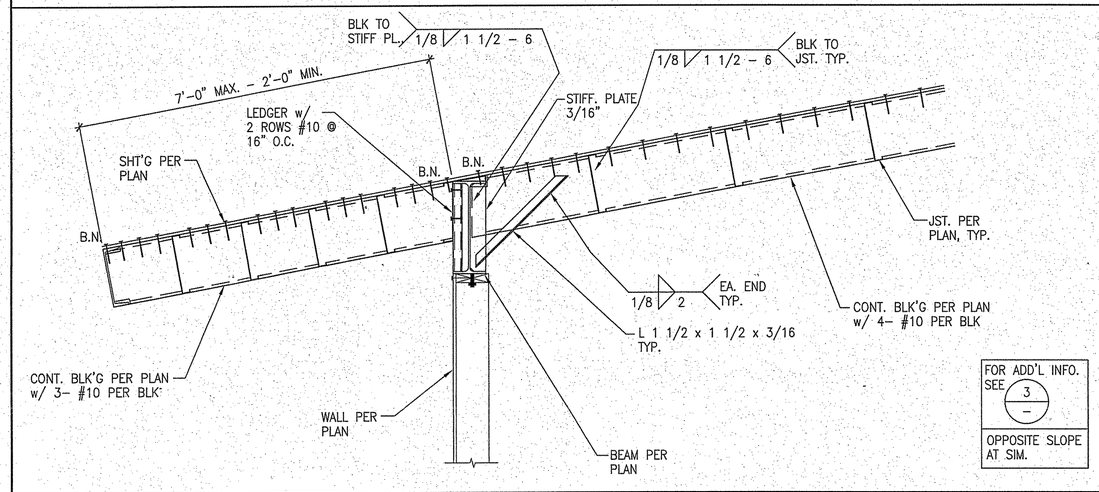

7

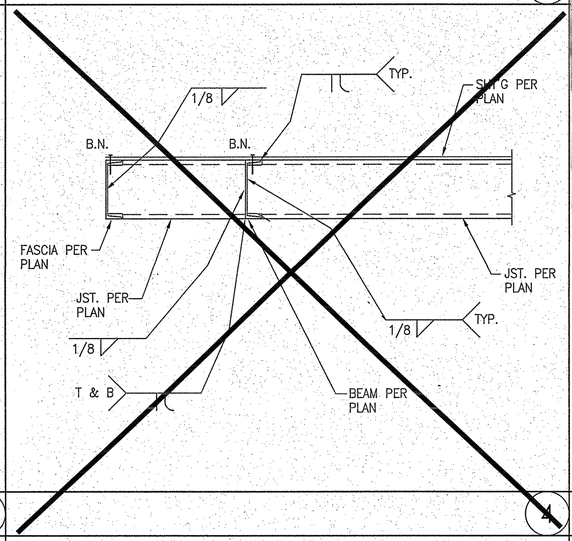

4

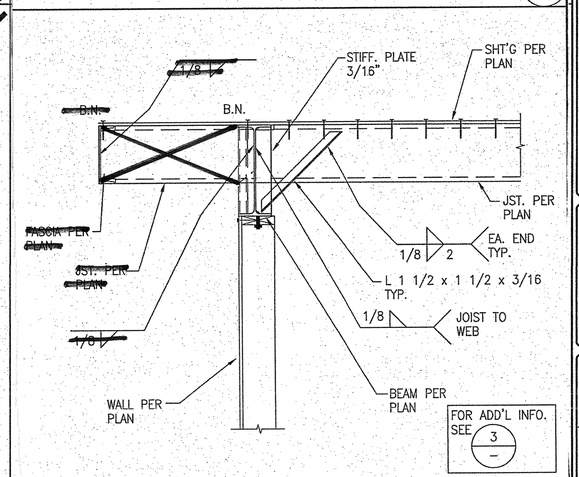

2

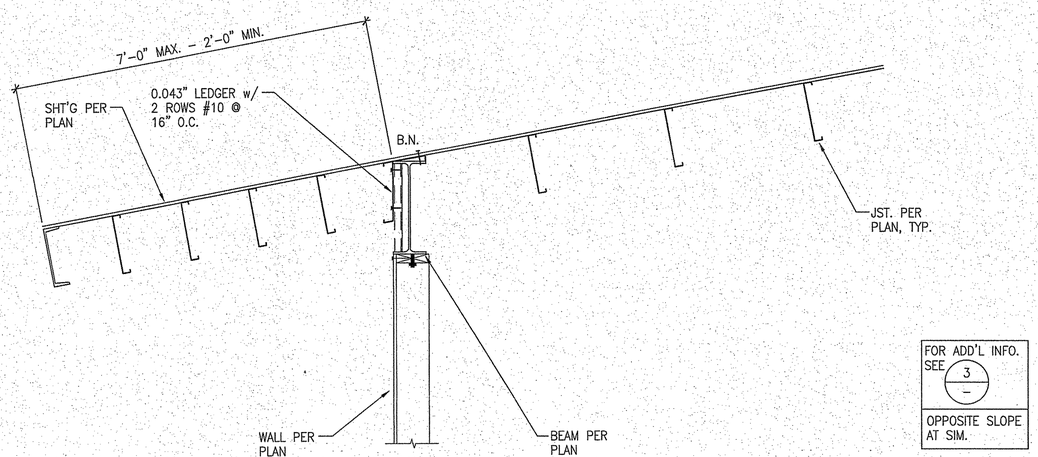

8

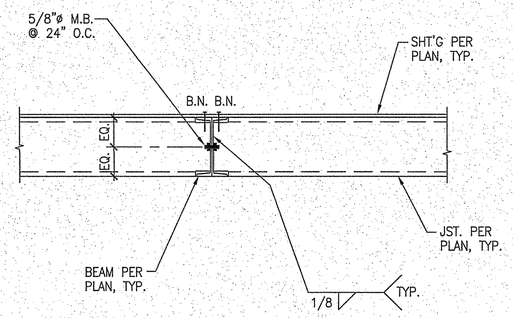

5

X

JTS MODULAR INC
• A BETTER WAY TO BUILD •
COMMERCIAL INSTITUTIONAL AND RESIDENTIAL MODULAR BUILDINGS DESIGN & PLANNING
7001 Mc Divitt Dr.
Bakersfield, CA 93313
Office: (661) 835-9270
Plant: (661) 833-2940
Fax: (661) 847-1007
www.jtsmodular.com

SLAB ON GRADE CLASSROOM PC #

REGISTERED PROFESSIONAL ENGINEER RYAN J. ORION No. S 4400 EXP. 12/31/16 STRUCTURAL STATE OF CALIFORNIA

DATE:
REVISIONS DESCRIPTION:

CLIENT NAME:
DRAWN BY: B.N.
CHECKED BY: R.J.O.
JOB NUMBER:
DATE: 01/12/2015
SCALE: AS NOTED

SHEET NAME
FRAMING DETAILS ROOF OVERHANG

SHEET NO.
S7.2

STRUCTURAL ENGINEER OF RECORD
ORION
Structural Engineering, Inc.
12257 OLD POMEROY ROAD, SUITE A
POWAY, CA 92064
PHONE (858) 679-1974
FAX (858) 679 1975

IDENTIFICATION STAMP DIV. OF THE STATE ARCHITECT
02 117009
AC FLS SS
DATE 7/23/18

PC

IDENTIFICATION STAMP DIV. OF THE STATE ARCHITECT OFFICE OF REGULATION SERVICES
02-113899
AC FLS SS
DATE 5/19/15

MECHANICAL ABBREVIATIONS

&	AND	HB	HOSE BIBB
∠	ANGLE	HC	HANDICAPPED
@	AT	HD	HEAD
℄	CENTER LINE	HDWE	HARDWARE
P.L.	PROPERTY LINE	HI.	HIGH
ø	DIAMETER or ROUND	HORIZ	HORIZONTAL
(E)	EXISTING	HP	HORSEPOWER
(N)	NEW	HW	HOT WATER
⊥	PERPENDICULAR	HWR	HOT WATER RETURN
#	POUND or NUMBER	HWS	HOT WATER SUPPLY
T	THERMOSTAT	HVAC	HEATING, VENTILATING, AIR CONDITIONING
A/C	AIR CONDITIONING	ID	INSIDE DIAMETER (DIM.)
AP	ACCESS PANEL	INSUL	INSULATION
ABV	ABOVE	INT	INTERIOR
ADJU	ADJUSTABLE		
AFF	ABOVE FINISH FLOOR		
AE	ADJUSTABLE EXTRACTOR	LAV	LAVATORY
AGGR	AGGREGATE	LBS	POUNDS
ALUM	ALUMINUM	LPG	LIQUID PETROLEUM GAS
APPROX	APPROXIMATE		
APPT	APPOINTMENTS		
ARCH.	ARCHITECTURAL	MACH	MACHINE
ARI	AMERICAN REFRIGERATION INSTITUTE	MATL	MATERIAL
ASPH	ASPHALT	MAX.	MAXIMUM
ASST	ASSISTANT	MBH	BTU PER HOUR (THOUSANDS)
AUTO.	AUTOMATIC	MCA	MINIMUM CIRCUIT AMPS
		MECH	MECHANICAL
BD	BALANCING DAMPER	MTL	METAL
BDD	BACKDRAFT SAMPER	MFGR	MANUFACTURER
(BF)	BELOW FINISH FLOOR	MH	MANHOLE
(BG)	BELOW FINISH GRADE	MIN	MINIMUM
BLDG	BUILDING	MISC	MISCELLANEOUS
BLKG	BLOCKING	MUA	MAKE UP AIR
BM	BEAM		
BTUH	BRITISH THERMAL UNIT/ HOUR	(N)	NEW
BOT	BOTTOM	NIC	NOT IN CONTRACT
BV	BALL VALVE	NO. or #	NUMBER
		NOM	NOMINAL
		NTS	NOT TO SCALE
CA	COMBUSTION AIR		
CAP	CAPACITY		
CD	CONDENSATE DRAIN	OA	OVERALL
CFD	CEILING FIRE DAMPER	OBD	OPPOSED BLADE DAMPER
CFM	CUBIC FEET PER MINUTE	OC	ON CENTER
CHW	CHILLED WATER	OSA	OUTSIDE AIR
CHWR	CHILLED WATER RETURN	OVHD	OVERHEAD
CHWS	CHILLED WATER SUPPLY		
CJ	CONTROL JOINT		
CLG	CEILING	PTN	PARTITION
CLKG	CAULKING	PHYS	PHYSICAL
CLR	CLEAR	PR	PRESSURE RELIEF
CO	CLEANOUT	PVC	POLY-VINYL CLORIDE PIPE
COL	COLUMN	PLAS	PLASTER
COMP	COMPRESSED	PLYWD	PLYWOOD
CONC	CONCRETE	POC	POINT OF CONNECTION
CONF	CONFERENCE	PREFAB	PREFABRICATED
CONN	CONNECTION	PREP	PREPARATION
CONST	CONSTRUCTION	PSI	POUNDS PER SQUARE INCH
CONT	CONTINUOUS	PW	PROCESSED WATER
CORR	CORRIDOR		
CSE	CALIFORNIA SEASONAL EFFICIENCY		
CKS	COUNTERSUNK	R	RISER
CTR	CENTER	RA	RETURN AIR
CV	CHECK VALVE	RAD.	RADIUS
		RAG	RETURN AIR GRILLE
DBL	DOUBLE	REF	REFERENCE
DB	DRY BULD (TEMPERATURE)	REINF	REINFORCED
DEPT	DEPARTMENT	REQD	REQUIRED
DET	DETAIL	RM	ROOM
DF	DRINKING FOUNTAIN	RND	ROUND
DHW	DOMESTIC HOT WATER		
DHWR	DOMESTIC HOT WATER RETURN		
DIA or ø	DIAMETER	S.	SOUTH
DIR	DIRECTOR	SA	SUPPLY AIR
DN	DOWN	SAD	SUPPLY AIR DIFFUSER
DR	DOOR	SAG	SUPPLY AIR GRILLE
DS	DOWNSPOUT	SAR	SUPPLY AIR REGISTER
DSP	DRY STANDPIPE	SCHD	SCHEDULE
DTR	DUCT THRU ROOF	SD	SMOKE DETECTOR
DTW	DUCT THRU WALL	SEER	SEASONAL ENERGY EFFICIENCY
DWG	DRAWING	SECT.	SECTION
		SHT	SHEET
E	EAST	SIM	SIMILAR
EA	EXHAUST AIR	SQ	SQUARE
EAG	EXHAUST AIR GRILLE	SPEC	SPECIFICATION
EDB	ENTERING DRY BURL	SOV	SHUT-OFF VALVE
EER	ENERGY EFFICIENCY RATIO	SS	SERVICE SINK
ELEC	ELECTRICAL	SST	STAINLESS STEEL
ELEV	ELEVATION	STD	STANDARD
EMER	EMERGENCY	STL	STEEL
ENCL	ENCLOSURE	STOR	STORAGE
EP	ELECTRICAL PANEL	STRUCT	STRUCTURAL
EQ	EQUAL	SUPV	SUPERVISOR
EQUIP	EQUIPMENT	SUSP	SUSPENDED
(E)	EXISTING	S&W	SOIL & WASTE
ESP	EXTERNAL STATIC PRESSURE		
EWB	ENTERING WET BULB		
EXPO.	EXPOSED	TC	TOP OF CURB
EXT	EXTERIOR	TEL	TELEPHONE
		TER	TERRAZZO
FA	FIRE ALARM	TG	TRANSFER GRILLE
FC	FLEXIBLE CONNECTION	THK	THICK
FD	FIRE DAMPER	TOC	TOP OF CONCRETE
FDN	FOUNDATION	TP	TRAP PRIMER
FE	FIRE EXTINGUISHER	TRANS	TRANSCRIPTION
FEC	FIRE EXTINGUISHER CABINET	TREAT.	TREATMENT
FHC	FIRE HOSE CAB.	TYP	TYPICAL
FHMS	FLAT HEAD METAL SCREW	TV	TEMPERING VALVE
FIN.	FINISH		
FLA	FULL LOAD AMPS	UL	UNDERWRITERS LABORATORIES
FLASH.	FLASHING	UON	UNLESS OTHERWISE NOTED
FM	FIRE MAIN	UR	URINAL
FOC	FACE OF CONCRETE		
FOF	FACE OF FINISH	V	VENT
FPM	FEET PER MINUTE	VD	VOLUME DAMPER
FRPF	FIREPROOFING	VTR	VENT THRU ROOF
FSC	FAN SPEED CONTROL	VSAD	VARIBLE SUPPLY AIR DIFFUSER
FSD	FIRE/SMOKE DAMPER		
FSL	FIRE SPRINKLER LINE		
FTR	FLUE THRU ROOF	W	WASTE LINE
FUNC	FUNCTION	W/	WITH
FURR	FURRING	WB	WET BULB TEMPERATURE
FUT	FUTURE	WFD	WALL FIRE DAMPER
		WH	WATER HEATER
GA	GAUGE OR GAGE	WHA	WATER HAMMER ARRESTOR
GALV	GALVANIZED	W/O	WITHOUT
GEN	GENERAL	WMF	WASHING MACHINE FITTING
GI	GALVANIZED IRON	WP	WATERPROOF
GL	GLASS	WT	WEIGHT
GPM	GALLONS PER MINUTE		
GR	GRADE		
GRD	GROUND	YD	YARD
G	GAS LINE		

DUCT SIZING REQUIREMENTS

0-90 CFM	600 FPM	.08 LOSS PER 100FT	6" DIAMETER
90-200 CFM	600 FPM	.08 LOSS PER 100FT	8" DIAMETER
200-375 CFM	700 FPM	.08 LOSS PER 100FT	10" DIAMETER
375-600 CFM	800 FPM	.08 LOSS PER 100FT	12" DIAMETER
600-900 CFM	875 FPM	.08 LOSS PER 100FT	14" DIAMETER
900-1200 CFM	900 FPM	.08 LOSS PER 100FT	16" DIAMETER
1200-1600 CFM	900 FPM	.08 LOSS PER 100FT	18" DIAMETER
1600-2000 CFM	900 FPM	.08 LOSS PER 100FT	20" DIAMETER
2000-2400 CFM	900 FPM	.08 LOSS PER 100FT	22" DIAMETER

NOTES:
1. ALL ELBOWS TO BE SMOOTH RADIUS
2. ALL FITTINGS TO BE OF INDUSTRY STANDARD TYPE WITH COEFFICIENTS PUBLISHED IN MANUAL Q

SYMBOLS

SYMBOL	DESCRIPTION
	AIR CONDITION UNIT
	SUPPLY AIR CEILING DIFFUSER
SIZE CFM	SUPPLY AIR CEILING DIFFUSER
SIZE CFM	SUPPLY VARIBLE AIR CEILING DIFFUSER HEAT & COOL
SIZE CFM	RETURN AIR CEILING REGISTER
SIZE CFM	EXHAUST AIR CEILING REGISTER
SIZE CFM	SUPPLY AIR WALL DIFFUSER
SIZE CFM	RETURN AIR WALL REGISTER
SIZE CFM	EXHAUST AIR WALL REGISTER
SIZE	TRANSFER GRILLE
	DUCTWORK (RECTANGULAR)
	DUCTWORK (ROUND)
	LINED DUCTWORK
	TURNING VANE
	FLEXIBLE DUCTWORK
	FLEXIBLE CONNECTION
FD	MANUAL AIR VOLUME DAMPER
FD	FIRE DAMPER
SFD SFD	SMOKE FIRE DAMPER
OAI 500	OUTSIDE AIR INTAKE MIN. CFM
A/C–1	ROOM THERMOSTAT – SUBSCRIPT INDICATES UNIT CONTROL +48" TO T.O. BOX MAX.
BT	BYPASS TIMER
TC	TIME CLOCK
$	ON/OFF SWITCH
FSC	FAN SPEED CONTROL
SD	DUCT SMOKE DETECTOR
	POINT OF CONNECTION
	CEILING EXHAUST FAN
	FURNACE (VERTICAL)
	FURNACE (HORIZONTAL)
	CONDENSING UNIT

GENERAL MECHANICAL NOTES

SECTION 1
BASIC MECHANICAL MATERIALS AND METHODS

PART 1 – GENERAL

1.1 SUMMARY
A. LABOR, MATERIALS, TOOLS, AND SERVICES FOR A COMPLETE INSTALLATION OF EQUIPMENT AND SYSTEM CONTAINED IN THE CONTRACT DOCUMENTS.
B. PRINCIPAL FEATURES OF THE WORK INCLUDED ARE:
1. HEATING, VENTILATING, AIR CONDITIONING SYSTEMS, CONTROLS, AND MECHANICAL SYSTEM INSULATION.
2. ROOF CURBS FOR HVAC SYSTEMS, INTAKE HOODS, LOUVERS, SUPPLY FANS, AND RELIEF VENTS FURNISHED AND SET UNDER THIS DIVISION.
3. REFRIGERANT PIPING, CONNECTIONS, REFRIGERANT AND REFRIGERANT CHARGES.
4. EXCAVATING AND BACKFILLING FOR MECHANICAL WORK: COORDINATE WITH APPROPRIATE TRADE.
5. ANCHOR BOLTS, SLEEVES, SUPPORTS AND SIMILAR ITEMS TO BE BUILT INTO CONCRETE OR MASONRY.
6. PREPARATION FOR TESTING AND BALANCE OF MECHANICAL SYSTEMS AND CORRECTING DEFICIENCIES.
7. PREPARATION AND SUBMITTAL OF SHOP DRAWING AND PRODUCT DATA.
8. MAINTAINING A RECORD SET OF BLUE LINE PRINTS AND MAKING THEM TO INDICATE LOCATIONS OF CONCEALED ITEMS, AND DEVIATIONS MADE TO SUIT CONDITIONS AND PRODUCTION OF MECHANICAL AS-BUILT (RECORD) DRAWINGS.

1.2 JOB CONDITIONS.
A. SUBMITTAL OF BID IMPLIES BIDDER HAS READ APPLICABLE PARAGRAPHS OF THE SPECIFICATIONS AND WILL BE BOUND BY THEIR CONDITIONS.

1.3 LOCAL CONDITIONS
A. CONFORM WITH LOCAL CONDITIONS. COORDINATE WITH LOCAL UTILITIES ON SIZE OF UTILITY SERVICE.

1.4 INTENT
A. THE CONTRACT DOCUMENTS (DRAWINGS AND SPECIFICATIONS) DESCRIBE THE MECHANICAL WORK OF THIS PROJECT ANY ITEMS MENTIONED IN ONE PART SHALL BE AS BINDING AS THOUGH MENTIONED IN BOTH.
B. THE SEPARATE DOCUMENTS FORM A GUIDE FOR A COMPLETE MECHANICAL INSTALLATION. WHERE AN ITEM IS REASONABLY NECESSARY BUT NOT SPECIFICALLY MENTIONED, SUCH AS DUCT HANGERS OR TRANSITIONS, PIPING OFFSETS, DRAINS, ETC., FOR A COMPLETE SYSTEM, PROVIDE SAME.
C. LOCATIONS INDICATED ON DRAWINGS ARE DIAGRAMATIC ONLY. EXACT LOCATIONS OF DUCTS, AND EQUIPMENT SHALL BE GOVERNED BY THE DRAWINGS OF RELATED TRADES.

1.5 DEVIATIONS
A. NO DEVIATIONS FROM SPECIFICATIONS AND DRAWINGS SHALL BE MADE WITHOUT FULL KNOWLEDGE AND WRITTEN CONSENT OF CONSTRUCTION MANAGER.
B. SHOULD CONTRACTOR FIND, DURING PROGRESS OF WORK, CONDITIONS WHICH DICTATE A MODIFICATION OF ANY PARTICULAR REQUIREMENTS, REPORT SUCH ITEM PROMPTLY FOR DECISION OF INSTRUCTIONS.

1.6 QUALITY ASSURANCE
A. COMPLY WITH APPLICABLE LOCAL, STATE AND FEDERAL CODES.
B. COMPLY WITH APPLICABLE REQUIREMENTS OF RECOGNIZED INDUSTRY ASSOCIATIONS WITH PROMULGATE STANDARDS FOR THE VARIOUS TRADES. (SEE INDIVIDUAL SECTIONS OF DIVISION 15)
C. EMPLOY QUALIFIED JOURNEYMEN FOR THIS WORK. EMPLOY COMPETENT, QUALIFIED MECHANICS TO SUPERVISE THE WORK.

1.7 CODES AND STANDARDS
A. PERFORM WORK SPECIFIED IN DIVISION 15 IN ACCORDANCE WITH THE APPLICABLE CODES AND STANDARDS LISTED BELOW, AND SUCH STANDARDS THAT MAY BE SPECIFIED IN OTHER SECTIONS. WHEN THESE SPECIFICATIONS ARE MORE STRINGENT, THEY TAKE PRECEDENCE. IN CASE OF CONFLICT, OBTAIN A DECISION FROM THE MECHANICAL ENGINEER.
1. NFPA 54: NATIONAL FUEL AND GAS CODE.
2. NFPA 90A: AIR CONDITIONING AND VENTILATION SYSTEMS.
3. NFPA 101: LIFE SAFETY CODE.
4. APPLICABLE STATE BUILDING CODE.
5. APPLICABLE STATE MECHANICAL CODE.
6. HANDICAPPED CODE ANSI A117.1 AND ADA
7. APPLICABLE STATE ENERGY CODE.
8. AGA: AMERICAN GAS ASSOCIATION.
9. ANSI: AMERICAN NATIONAL STANDARDS INSTITUTE.
10. ARI: AMERICAN REFRIGERATION INSTITUTE.
11. ASHRAE: AMERICAN SOCIETY OF HEATING, REFRIGERATION AND AIR CONDITIONING ENGINEERS.
12. ASME: AMERICAN SOCIETY FOR MECHANICAL ENGINEERS.
13. ASTM: AMERICAN SOCIETY FOR TESTING AND MATERIALS.
14. MSS: MANUFACTURER'S STANDARDIZATION SOCIETY OF THE VALVE AND FITTING INDUSTRY.
15. NFPA: NATIONAL FIRE PROTECTION ASSOCIATION.
16. SMACNA: SHEET METAL AND AIR CONDITIONING CONTRACTOR'S NATIONAL ASSOCIATION.
17. UL: UNDERWRITERS LABORATORIES. INC.

1.8 COORDINATION
A. CAREFULLY EXAMINE SPECIFICATIONS AND DRAWINGS TO BE THOROUGHLY FAMILIAR WITH ITEMS WHICH REQUIRE HVAC CONNECTIONS AND COORDINATION.
B. COORDINATE WITH OTHER DIVISIONS TO LEAVE PROPER CHASES AND OPENINGS. PLACE OUTLETS, ANCHORS, SLEEVES, AND SUPPORTS PRIOR TO POURING CONCRETE OF INSTALLATION OF MASONRY WORK.

1.9 SUBMITTALS
A. SUBMITTALS ARE ONLY REQUIRED FOR SPECIFIC ITEMS OF EQUIPMENT OR MATERIAL LISTED IN INDIVIDUAL SECTIONS OF THESE SPECIFICATIONS.
B. WITHIN 15 DAYS AFTER AWARD OF CONTRACT FOR THIS WORK, SUBMIT A LIST OF PROPOSED MANUFACTURERS (OF EQUIPMENT OR MATERIAL TO BE USED) FOR APPROVAL. SUBMIT THIS LIST BEFORE SUBMITTAL OF SHOP DRAWINGS AND PRODUCT DATA, AND OBTAIN APPROVAL BEFORE SUBMITTING REQUIRED ITEMS.
C. SHOP DRAWINGS (NOT REQUIRED FOR OWNER FURNISHED EQUIPMENT).

1.10 DELIVERY AND STORAGE
A. INSOFAR AS POSSIBLE, DELIVER ITEMS IN MANUFACTURER'S ORIGINAL UNOPENED PACKAGING. WHERE THAT IS NOT PRACTICAL, COVER ITEMS WITH PROTECTIVE MATERIALS TO KEEP THEM FROM BEING DAMAGED. USE CARE IN LOADING, TRANSPORT, UNLOADING, AND STORAGE TO KEEP ITEMS FROM BEING DAMAGED.

1.11 FIRE RATINGS
A. MATERIALS USED ANYWHERE IN THE WORK MUST HAVE NFPA RATINGS AS FOLLOWING:
1. FLAME SPREAD – NOT OVER 25
2. SMOKE DEVELOPED – NOT OVER 50
3. FUEL CONTRIBUTED – NOT OVER 25
B. MATERIALS SHALL BE "SELF EXTINGUISHING".

1.12 PERMITS AND FEES
A. OBTAIN, PAY FOR, AND DELIVER PERMITS, CERTIFICATION OF INSPECTION, AND OTHER SUCH ITEMS REQUIRED BY THE AUTHORITIES HAVING JURISDICTION. DELIVER CERTIFICATION TO THE CONSTRUCTION MANAGER PRIOR TO FINAL ACCEPTANCE OF THE WORK. AN INSPECTION CERTIFICATE FOR EACH CLASS OF WORK REQUIRING INSPECTION MUST BE SUBMITTED PRIOR TO OR WITH THE FINAL PAYMENT INVOICE. THE RESPONSIBLE TRADE CONTRACTOR MUST MAKE APPLICATION FOR THE INSPECTION, COORDINATE SAME AND PAY THE REQUIRED INSPECTION FEE.

1.13 EXTENDED WARRANTIES
A. WORK FURNISHED UNDER THE CONTRACT SHALL BE WARRANTED AGAINST DEFECTS IN WORKMANSHIP AND (CONTRACTOR FURNISHED) MATERIALS FOR A PERIOD OF NOT LESS THAT ONE (1) YEAR, OR AS OTHERWISE SPECIFIED, FROM THE DATE OF FINAL ACCEPTANCE OF THE INSTALLATION. DEFECTS OF WORKMANSHIP DEVELOPING DURING THIS PERIOD SHALL BE REMEDIED, AND DEFECTIVE MATERIAL REPLACED, WITHOUT ADDITIONAL COST. WHEN DEFECTS IN A TRADE CONTRACTOR'S WORK CAUSES DAMAGE TO THE WORK OF THE OTHER TRADE CONTRACTORS, SUCH DAMAGE SHALL BE REPAIRED BY THE TRADE CONTRACTOR CAUSING DAMAGE AND WORK RESTORED TO ITS ORIGINAL CONDITION, AT THE EXPENSE OF THE TRADE CONTRACTOR THAT CAUSED THE DAMAGE.

PART 2 – PRODUCTS

2.1 MATERIALS AND EQUIPMENT
A. WITHIN THE CONTRACT DOCUMENTS RELATING TO MECHANICAL WORK, MANUFACTURER'S NAMES, CATALOG NUMBERS, AND OTHER PROPRIETARY REFERENCES TO MATERIALS AND EQUIPMENT ARE MADE. SUCH REFERENCES ARE MADE TO ESTABLISH THE STANDARDS OF QUALITY AND TYPE REQUIRED, AND NOT TO LIMIT COMPETITION. ACCEPTABLE MANUFACTURER'S OF COMPETITIVE PRODUCTS ARE LISTED IN APPLICABLE SECTIONS AS "APPROVED EQUALS". REASONABLE REQUESTS FOR SUBSTITUTION OR ADDITIONS TO "APPROVED EQUALS" WILL BE CONSIDERED, BUT THE MECHANICAL ENGINEER WILL BE THE SOLE JUDGE OF ACCEPTABILITY OF ITEMS PROPOSED AS SUBSTITUTES.
B. MATERIALS AND EQUIPMENT USED IN CARRYING OUT THESE SPECIFICATIONS SHALL BEAR UL OR OTHER RECOGNIZED TESTING LABORATORY LABEL WHEN SUCH LABELS ARE AVAILABLE.

PART 3 – EXECUTION

3.1 LOCATIONS
A. MECHANICAL LAYOUTS INDICATED ON DRAWINGS ARE DIAGRAMMATIC. EXACT LOCATIONS OF DUCT, AND EQUIPMENT MAY VARY BECAUSE OF CONFLICTS WITH WORK OF OTHER TRADES. WORK OUT CONFLICTS WHERE RELOCATION'S WILL NOT AFFECT OPERATION OR APPEARANCE OF SYSTEMS.
B. LOCATE EQUIPMENT REQUIRING PERIODIC SERVICING SO THAT IT IS READILY ACCESSIBLE. DO NOT BACK UP SERVICE SIDES TO WALLS, NOR PLACE IT TOO CLOSE TO OTHER EQUIPMENT TO MAKE SERVICE IMPRACTICAL. EQUIPMENT SERVICE CLEARANCE SHALL MEET MINIMUM ACCEPTABLE DISTANCE AS RECOMMENDED BY EQUIPMENT MANUFACTURER.

3.2 UTILITIES EXCAVATING AND BACKFILLING
A. PERFORM TRENCHING, EXCAVATING, BACKFILLING FOR MECHANICAL WORK IN ACCORDANCE WITH THE APPROPRIATE SECTIONS AND AS SET FORTH BELOW.
1. PERFORM WORK NECESSARY FOR INSTALLATION OF MECHANICAL UTILITIES.
2. DEPTH OF EXCAVATION TO PROVIDE A MINIMUM OF 3" ABOVE TOP OF PIPE. EXCAVATION TO BE CARRIED TO A DEPTH OF AT LEAST 6" BELOW BOTTOM OF PIPE ELEVATION. FILL BELOW PIPE (6"), AROUND PIPE, AND A MINIMUM OF 12" ABOVE PIPE WIT SAND OR CLASS "B" CRUSHED STONE TAMPED FIRM AND EVEN. SEPARATE TOPSOIL DURING EXCAVATION. FINAL LAYER OR DIRT (12" MINIMUM) TO BE TOPSOIL. TRENCHES TO BE AT LEAST 18" WIDER THAN PIPE WITH BATTER BOARDS PLACED EVERY 25'. BACKFILLING SHALL BE DONE TO EXCLUDE USE OF ROCK OR STONE ABOVE SAND OR CRUSHED STONE.

3.3 CUTTING AND PATCHING
A. REPAIR OR REPLACE ROUTINE DAMAGE CAUSED BY CUTTING IN PERFORMANCE OF CONTRACT.
B. CORRECT UNNECESSARY DAMAGE CAUSED DUE TO INSTALLATION OF MECHANICAL WORK.
C. PERFORM REPAIRS WITH MATERIALS WHICH MATCH EXISTING AND INSTALL IN ACCORDANCE WITH THE APPROPRIATE SECTION OF THESE SPECIFICATIONS OR THE BEST STANDARDS OF THE INDUSTRY.

3.4 CONNECTION TO EQUIPMENT
A. CONNECT OR INSTALL EQUIPMENT SHOWN ON MECHANICAL DRAWINGS THAT REQUIRE MECHANICAL HOOKUPS.

3.5 SERVICE OF SYSTEM
A. IF EQUIPMENT IS PLACED IN SERVICE PRIOR TO ACCEPTANCE OF THE PROJECT, OPERATE EQUIPMENT STRICTLY IN ACCORDANCE WITH MANUFACTURER'S INSTRUCTIONS. INSTALL NEW FILTERS IN EQUIPMENT PRIOR TO OWNER OCCUPYING BUILDING
B. EMPLOY COMPETENT, QUALIFIED PERSONNEL IN OPERATION OF THE EQUIPMENT.
C. PROVIDE FOR PROPER OPERATION AND CLEANLINESS.
D. OPERATE EQUIPMENT FOR INSPECTION AS DIRECTED BY THE SUPERINTENDENT.
E. LUBRICATE EQUIPMENT AND PERFORM SUCH OTHER MAINTENANCE AS REQUIRED TO PLACE IT IN FIRST CLASS OPERATING CONDITION.

END OF SECTION

SECTION 2
HEATING, VENTILATION AND AIR CONDITIONING

PART 1 – GENERAL

1.1 RELATED DOCUMENTS
A. EXAMINE DRAWINGS AND CONTRACT FOR MATERIALS FURNISHED BY OWNER, INSTALLED BY CONTRACTOR OR FURNISHED AND INSTALLED BY OWNER.

1.2 SCOPE OF WORK
A. FURNISH ALL LABOR, SUPERVISION, AND EQUIPMENT (UNLESS EQUIPMENT IS SPECIFICALLY NOTED AS 'OWNER FURNISHED') FOR THE COMPLETE INSTALLATION OF HEATING, VENTILATION, AND AIR CONDITIONING SYSTEM TOGETHER WITH ALL NECESSARY AUXILIARIES AND APPURTENANCES.

1.3 QUALITY ASSURANCE
A. MANUFACTURER'S QUALIFICATIONS – INSTALL PACKAGED UNITS, AS INDICATED IN THE DRAWINGS, IN ACCORDANCE WITH MANUFACTURER'S INSTRUCTIONS AND REQUIREMENTS. PROVIDE RELATED PRODUCTS AND ACCESSORIES FROM ONE MANUFACTURER. STORE MATERIALS IN ACCORDANCE WITH MANUFACTURER'S RECOMMENDATION PROTECTING FROM DIRT, MOISTURE, CONTAMINANTS, AND WEATHER.
B. CODES AND STANDARDS – PERFORM ALL INSTALLATION IN ACCORDANCE WITH THE LATEST STANDARDS AS RECOGNIZED BY ASHRAE, SMACNA AND ALL APPLICABLE STATE AND LOCAL CODES AND ORDINANCES.
C. WORKMANSHIP – EXPERIENCED, WELL – TRAINED WORKERS, COMPETENT TO COMPLETE THE WORK AS SPECIFIED, SHALL PERFORM LABOR IN CONFORMANCE WITH GENERALLY ACCEPTED TRADE STANDARDS. INSTALL ALL EQUIPMENT SQUARE AND PLUMB ALLOWING ACCESS FOR PROPER OPERATION, ADJUSTMENT AND SERVICE.

1.4 STRUCTURAL AND SPACE CONDITIONS
A. ALL WORK SHALL AVOID OBSTRUCTIONS AND INTERFERENCE WITH OTHER TRADES, PRESERVE HEADROOM AND KEEP OPENINGS AND PASSAGEWAYS CLEAR AND FREE.

1.6 VIBRATION AND NOISE
A. INSTALL EACH OF THE VARIOUS PIECES OF EQUIPMENT TO OPERATE WITHOUT OBJECTIONABLE VIBRATION OR NOISE.

1.7 CUTTING AND PATCHING
A. CUTTING OR PATCHING NECESSARY TO PERMIT THE INSTALLATION OF ANY WORK UNDER THIS CONTRACT SHALL BE THE RESPONSIBILITY OF THIS TRADE. CUTTING AND PATCHING SHALL BE COORDINATED WITH OTHER TRADES SO AS NOT TO IMPACT OTHER WORK

1.8 BALANCING AND TESTING
A. TEST AND BALANCE SHALL BE PERFORMED BY A NATIONALLY QUALIFIED TEST AND BALANCE COMPANY. BALANCE CAOMPANY SHALL BE AN NEBB COMPANY.
B. CONTRACTOR SHALL COORDINATE TESTING WITH THE TESTING AND BALANCE COMPANY. ALL SYSTEMS SHALL BE FULLY OPERATIONAL PRIOR TO COMMENCEMENT OF TESTING. CORRECT ALL DEFICIENCIES NOTED IN THE TEST AND BALANCE REPORT WITHIN THREE DAYS OR PRIOR TO ACCEPTANCE OF THE PROJECT.
C. ASSUME RESPONSIBILITY FOR CORRECTING ALL ITEMS DETERMINED TO BE THE RESULT OF IMPROPER OR INCOMPLETE INSTALLATION. EXTRA TESTING REQUIRED DUE TO SUCH DEFICIENCIES WILL BE AT CONTRACTOR'S EXPENSE.
D. CONTRACTOR SHALL BE RESPONSIBLE FOR PROVIDING TEST REPORTS TO THE LOCAL BUILDING AND HEALTH DEPARTMENTS AS REQUIRED FOR CERTIFICATE OF OCCUPANCY.

PART 2 – PRODUCTS

2.1 AIR CONDITIONING UNITS, FANS AND AIR DEVICES
A. SHALL BE AS INDICATED ON THE DRAWINGS.

2.2 DUCTWORK
A. ALL DUCTS TO BE SPIRAL ROUND SHOW QUALITY EXPOSED ASSEMBLIES. FABRICATE IN ACCORDANCE WITH SMACNA – HVAC DUCT CONSTRUCTION STANDARDS AND TABLES INCLUDING THEIR ASSOCIATED DETAILS. CONFORM TO THE REQUIREMENTS IN THE REFERENCED STANDARD FOR METAL THICKNESS, REINFORCING TYPES AND INTERVALS, TIE ROD APPLICATIONS, AND JOINT TYPES AND INTERVALS. AN APPROVED FLEXIBLE DUCT MAY BE USED FOR THE LAST 7 FT. CONNECTION TO REGISTERS.

2.3 DUCT ACCESS PANELS AND DOORS
A. IN SHEET METAL WORK, HOLLOW CORE DOUBLE CONSTRUCTION OF SAME OR HEAVIER GAGE MATERIAL AS DUCT IN WHICH INSTALLED, PRODUCTS BY CESCO, VENT PRODUCTS, AIR BALANCE, OR EQUIVALENT.
1. PROVIDE VENTLOK OR APPROVED HINGES AND LATCHES ON ALL DOORS; 100 SERIES HINGES AND LATCHES ON LOW PRESSURE SYSTEM DOORS UP TO 18" MAXIMUM DIMENSION, 200 SERIES ON LARGER LOW PRESSURE SYSTEM DOORS AND 333 SERIES ON HIGH PRESSURE SYSTEMS.
2. CONSTRUCT DOORS UP TO 18" MAXIMUM DIMENSION WITH ONE INCH OVERLAP, FIT AND GASKET WITH 3/4" BY 1/8" SPONGE RUBBER, FIT LARGER DOORS AGAIN 1–1/2" BY 1/8" FLAT STOCK OR ANGLE FRAME AND GASKET WITH 3/4" BY 1/8" SPONGE RUBBER OR FELT
3. DOOR SWING TO BE OPPOSITE OF AIRFLOW.

2.4 DUCTWORK SPECIALTIES
A. VOLUME AND SPLITTER DAMPERS
1. GALVANIZED SHEET METAL BLADE AND FRAME WITH VENTFABRICE INC. VENTLOK OPERATING HARDWARE.
2. FOR ACCESSIBLE DAMPERS, PROVIDE #641 SELF – LOCKING DIAL REGULATORS AND #644 SELF – LOCKING DIAL REGULATORS FOR INSULATED DUCTWORK, #637 SQUARE END BEARING, AND #635 SPRING END BEARING, AS APPLICABLE
3. FOR INACCESSIBLE DAMPERS, PROVIDE #666 OR #667 CONCEALED LOCKING DAMPER REGULATOR WITH BEARING AS ABOVE. FOR STATIC PRESSURES ABOVE 3" W.G., PROVIDE #640 HIVEL DIAL REGULATOR AND #609 HIVEL END BEARING FOR ACCESSIBLE DAMPERS.
B. MULTI – LOUVER VOLUME DAMPERS
1. 16 – GAUGE GALVANIZED STEEL FRAME. OPPOSED, 6" WIDE, 16 – GAUGE GALVANIZED STEEL BLADES. CONCEALED LINKAGE IN FRAME
2. TITUS MD – 35 – B, RUSKIN #CD35/ OBD OR EQUAL
C. FLEXIBLE CONNECTIONS
1. PROVIDE FLEXIBLE CONNECTORS AT THE DISCHARGE AND INLET OF FANS, AIR HANDLERS, ROTATING MECHANICAL EQUIPMENT, AND WHERE SHOWN ON THE DRAWINGS FOR PROPER VIBRATION ISOLATION.
2. NEOPRENE IMPREGNATED GLASS CLOTH WITH 24 – GAUGE GALVANIZED METAL FRAME. MINIMUM DIMENSIONS – 3" METAL, 3" FABRIC, 3" METAL
3. DURO DYNE, INFM4, VENT FABRICS ,VENTGLAS, Q INDUSTRIES, CONSOLIDATED KINETICS, ELGEN, OR EQUAL
D. BACKDRAFT DAMPERS
1. PROVIDE COUNTERWEIGHT TYPE COMPLETE WITH FRAME, END BEARING, COUNTERBALANCE ASSEMBLY, BLADES, AND LINKAGE.
2. INSTALL AT OUTSIDE AIR INTAKE, EXHAUST OUTLETS, AND WHERE SHOWN ON DRAWINGS.
3. PACIFIC AIR PRODUCTS #PRD – 100AL, RUSKIN #CBS – 7 OR EQUAL BY AMERICAN WARMING. OR VENT PRODUCTS.
E. TURNING VANES
1.PROVIDE TURNING VANES AT ALL 90° AND 45° SQUARE ELBOWS. TURNING VANES SHALL BE DOUBLE WALL AIR FOIL TYPE CONSTRUCTED AND INSTALLED AS PER SMACNA.

2.5 DUCT INSULATION
A. ACCEPTABLE MANUFACTURERS: PROVIDE PRODUCTS OF THE FOLLOWING MANUFACTURES, COMPLYING WITH SPECIFIED REQUIREMENTS. EQUIVALENT PRODUCTS OF OTHER MANUFACTURERS WILL BE CONSIDERED.
1. OWENS – CORNING FIBERGLAS CORP.
2. MANVILLE PRODUCTS CORP.
3. CERTAINTEED CORP.
B. ALL INSULATION MATERIAL SHALL COMPLY WITH APPLICABLE ENERGY CONSERVATION REGULATION FOR PROJECT LOCATION.
C. PROVIDE COMPOSITE MECHANICAL INSULATION (INSULATION, JACKET, COVERINGS, SEALERS, MASTICS, AND ADHESIVES) WITH FLAME – SPEED INDEX OF 25 OR LESS, AND SMOKE – DEVELOPED INDEX OF 50 OR LESS, AS TESTED BY ASTM E84 (NFPA 255) METHOD.
D. PROVIDE STAPLES, BANDS, WIRES, TAPE, ANCHORS, CORNER ANGLES AND SIMILAR ACCESSORIES AS RECOMMENDED BY INSULATION MANUFACTURER FOR APPLICATIONS INDICATED.
E. PROVIDE CEMENTS, ADHESIVES, COATINGS, SEALERS, PROTECTIVE FINISHES, AND SIMILAR COMPOUNDS AS RECOMMENDED BY INSULATION MANUFACTURER FOR APPLICATIONS INDICATED.

2.6 HVAC CONTROLS
A. SHALL BE AS INDICATED ON THE DRAWINGS.
B. ELECTRIC AND ELECTRONIC HVAC CONTROLS – COMPONENTS AND OPERATING FEATURES AS INDICATED ON THE DRAWINGS.

PART 3 – EXECUTION

3.1 HVAC SYSTEM INSTALLATION, GENERAL
SEQUENCE, COORDINATE, AND INTEGRATE THE VARIOUS ELEMENTS OF MECHANICAL SYSTEMS, MATERIALS, AND EQ

NOTES:

1. 12ø PRESS RELIEF DTR TO RELIEF CAP ROOF CAP MTG – SEE DETAIL 5/M5.01 ON PC 02–113899
2. HP UNIT GROUND MTG – SEE DETAIL 3/M5.01 ON PC 02–113899
3. REFRIGERANT PIPING RISERS IN WALL TO FAN COIL – SIZE & INSTALL PER MFG'RS REC–FIELD VERIFY FOR EXACT ROUTING (TYP)

OSA SETTINGS:

<1> OSA DPR– SET @ 400 CFM

NOTE:
LAYOUT EQUIPMENT TO PROVIDE REQUIRED SERVICE & AIR FLOW REQUIREMENTS PER MFGR'S REC–CONTRACTOR TO VERIFY (TYP)

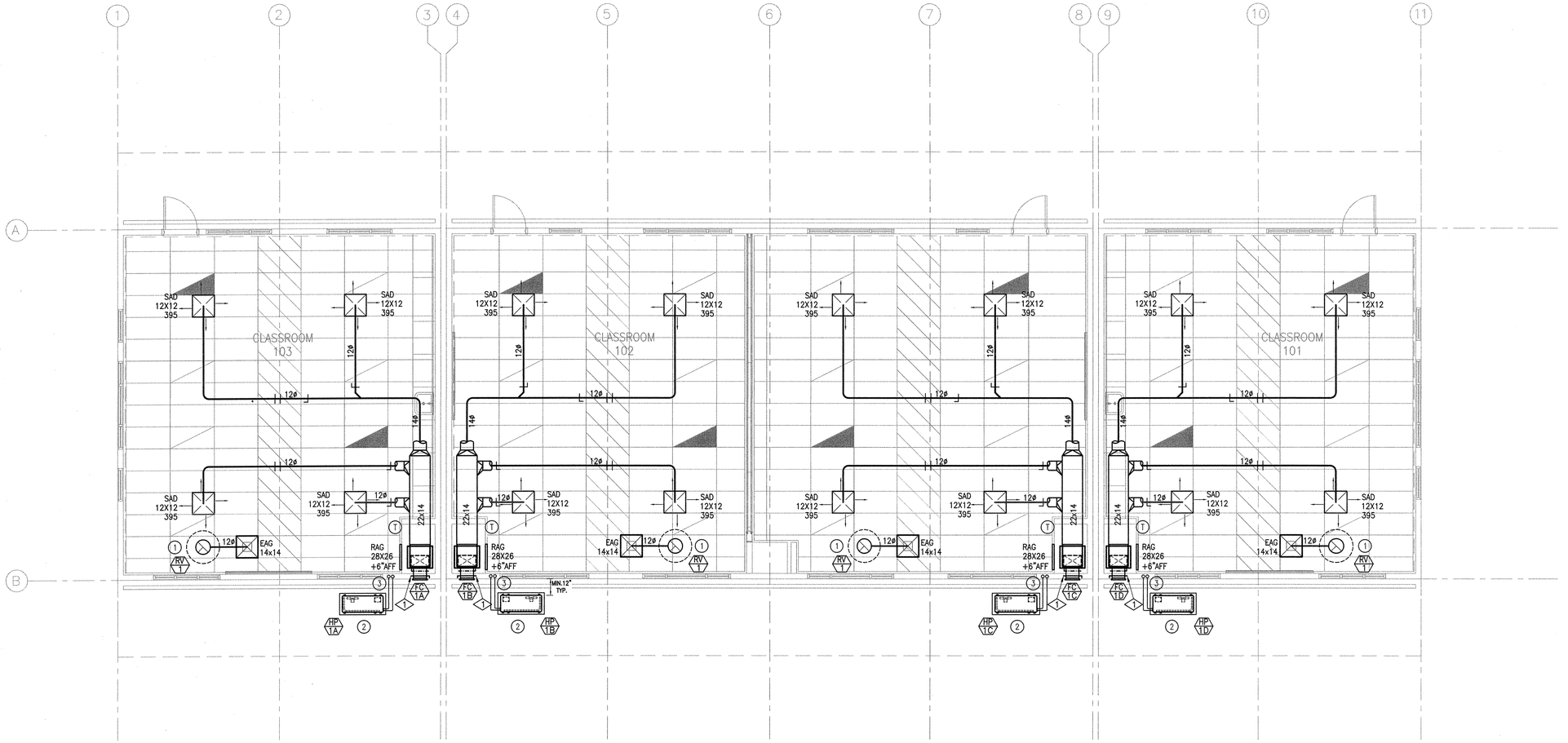

MECHANICAL FLOOR PLAN
SCALE: 3/16" = 1'-0"

JTS MODULAR
DESIGN • BUILD • TRANSPORT• ENJOY
7001 MC Divitt DRIVE
BAKERSFIELD, CA 93313
WWW.JTSMODULAR.COM
OFFICE: (661) 835-6270

LICENSE #E18218
CANTELMI ENGINEERING
2130 F STREET
BAKERSFIELD, CA 93301
TEL: (661) 324-5252
FAX: (661) 324-8439
Cantelmi@Cantelmi.NET
7/16/18
REGISTERED PROFESSIONAL ENGINEER FRANK J. CANTELMI No. 21190 MECHANICAL STATE OF CALIFORNIA

REGISTERED PROFESSIONAL ENGINEER RYAN J. OMAN No. S 4437 EXP. 12/31/18 STRUCTURAL STATE OF CALIFORNIA

MONSON - SULTANA ELEMENTARY SCHOOL
CLASSROOM - SLAB ON GRADE PC (02-113899)
10643 AVENUE 416, DINUBA, CA 93618
MONSON - SULTANA JOINT UNION ELEMENTARY SCHOOL DISTRICT

IDENTIFICATION STAMP
DIVISION OF THE STATE ARCHITECT
CODE 2013 CBC

IDENTIFICATION STAMP
DIV. OF THE STATE ARCHITECT
02 117009
AC FLS SS 04
DATE 7/33/18

JTS JOB#: 06–0246
DATE: 7/16/2018

MECHANICAL FLOOR PLAN

M-1.03-R

file: S:\DWGS\2018\JTS\MONSON SAL-TANA C18-117\C18-117_MECH_R3.dwg date: 7/16/2018 2:30 PM

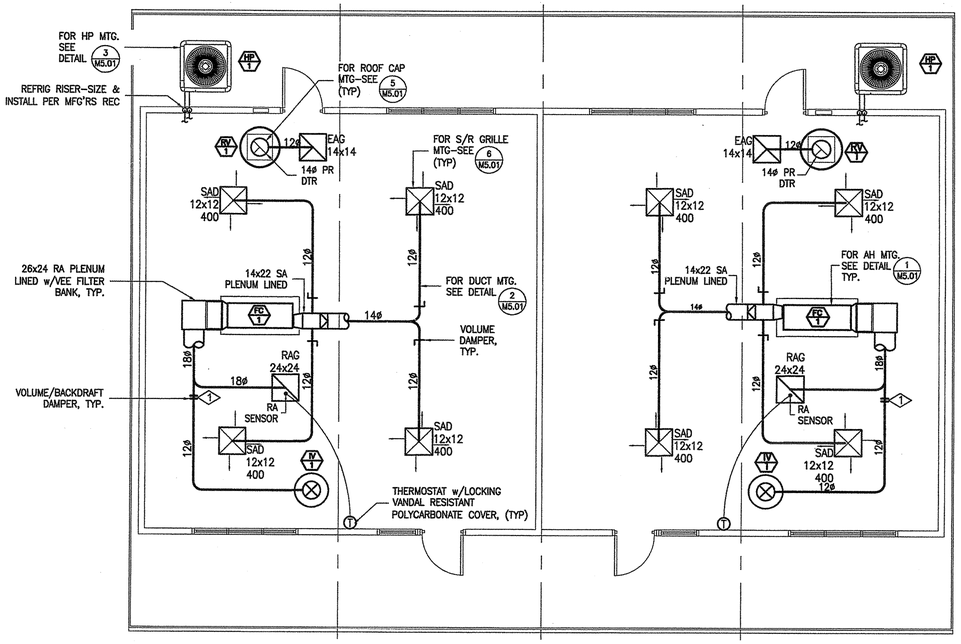

3 **SOG 32 - MECHANICAL PLAN - 4M (ALTERNATE 'A')**
SCALE: 3/16" = 1'-0"

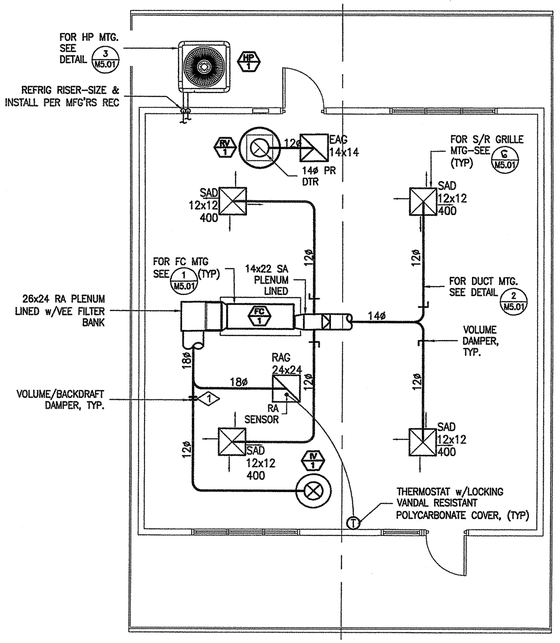

1 **SOG 32 - MECHANICAL PLAN - 2M (ALTERNATE 'A')**
SCALE: 3/16" = 1'-0"

FOR REFERENCE ONLY

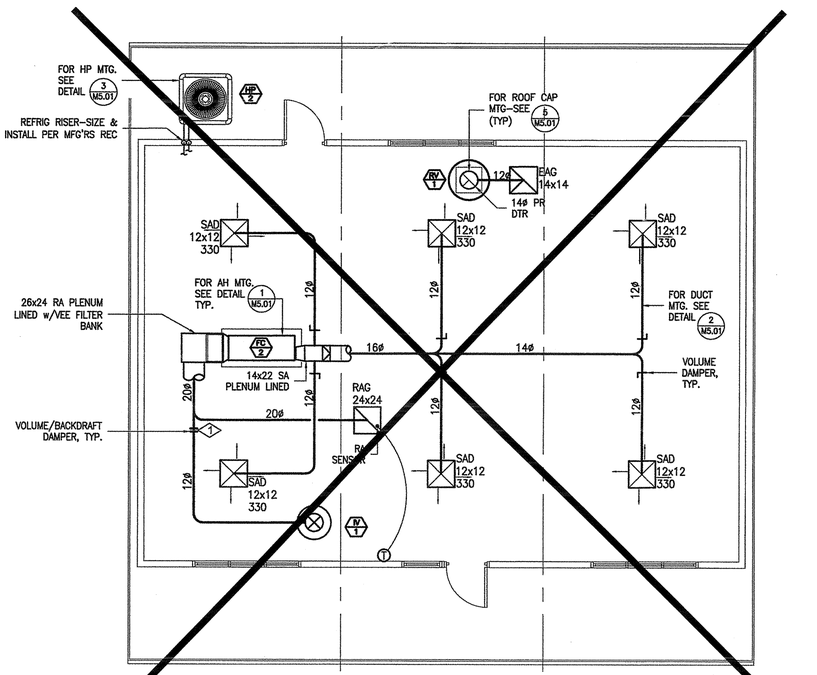

2 **SOG 32 - MECHANICAL PLAN - 3M (ALTERNATE 'A')**
SCALE: 3/16" = 1'-0"

IDENTIFICATION STAMP
DIV. OF THE STATE ARCHITECT
02 117009
AC FLS SS
DATE 7/23/19

JTS MODULAR
DESIGN • BUILD • TRANSPORT • ENJOY

COMMERCIAL INSTITUTIONAL AND RESIDENTIAL MODULAR BUILDINGS DESIGN & PLANNING

7001 Mc Divitt Dr.
Bakersfield, CA 93313
Office: (661) 835-9270
Plant: (661) 833-2940
Fax: (661) 847-1007
www.jtsmodular.com

LICENSE #21190
CANTELMI ENGINEERING
MECHANICAL & ELECTRICAL ENGINEERING
1800 21 STREET, SUITE C
BAKERSFIELD, CA 93301
TEL: (661) 324–5252
FAX: (661) 324–8439
Cantelmi@Cantelmi.NET

SOG-32
RE-LOCATABLE BUILDING PC

APPROVALS

IDENTIFICATION STAMP
DIV. OF THE STATE ARCHITECT

PRE CHECK (PC) DOCUMENT
CODE 2013 CBC
A SEPARATE PROJECT APPLICATION FOR CONSTRUCTION IS REQUIRED

FILE # PC-JTS
APPL# 02-117009
AC FLS SS
DATE 2/19/15

DATE

PROJECT XX-XXX

REGISTERED PROFESSIONAL ENGINEER
FRANK J. CANTELMI
NO. 21190
RENEWAL 08-2015
MECHANICAL
STATE OF CALIFORNIA

C14200_MEP_REV1

02–18–15

PC

SHEET NAME
MECHANICAL PLANS: 2M, 3M & 4M (ALTERNATE 'A')

SHEET NUMBER
M1.01

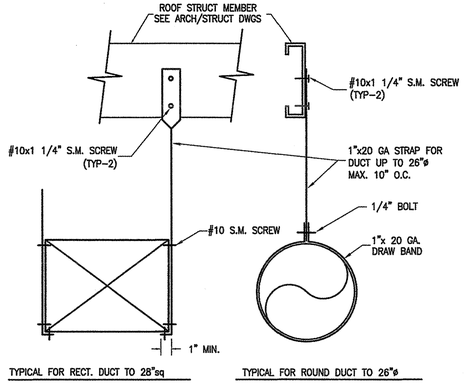

DETAIL SHOWN FOR REFERENCE ONLY – CONTRACTOR TO INSTALL AS PER SMACNA GUIDELINES FOR SEISMIC RESTRAINTS OF MECHANICAL SYSTEMS & PLUMBING PIPING SYSTEMS.

④ DUCT HANGER - TYP NTS

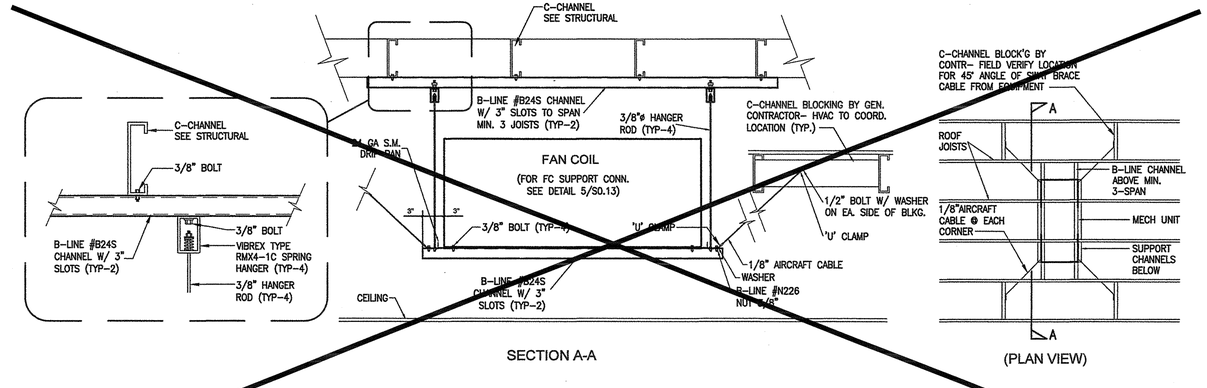

NOTE! LAYOUT EQUIPMENT, DUCTWORK, PIPING, ETC SUSPENDED ABOVE 'T'BAR CEILINGS OR MOUNTED ON PLATFORMS TO ALLOW FOR SERVICE & FILTER CHANGEOUT PER MFG'RS CLEARANCE RECOMMENDATIONS. PROVIDE ACCESS THRU 'T'BAR & HARD CEILINGS. KEEP CATWALKS CLEAR FROM CEILING ACCESS TO EQUIPMENT LOCATIONS PER CMC 2013.

① FAN COIL HORIZONATAL MTG - TYP. (ALT. A) NTS

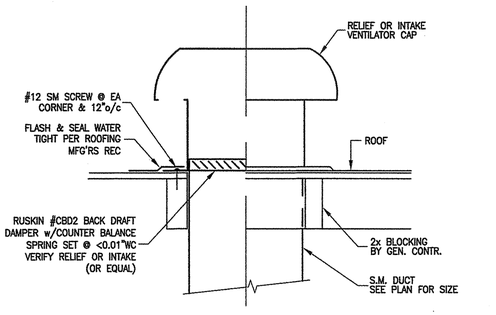

⑤ RELIEF/INTAKE VENTILATOR MTG - TYP. NTS

NOTE:
ALL BRACING OF DUCTS AND PIPING SHALL BE INSTALLED IN ACCORDANCE WITH SMACNA GUIDELINES PER 2013 CMC SECTION 604.5

WHERE BRACING DETAILS ARE NOT SHOWN IN THE DRAWINGS OR IN THE GUIDELINES, THE FIELD INSTALLATION SHALL BE SUBJECT TO THE APPROVAL OF THE ARCHITECT, MECHANICAL ENGINEER, AND DSA DISTRICT ENGINEER.

A COPY OF THE GUIDE LINES PUBLISHED BY SMACNA SHALL BE PROVIDED BY THE CONTRACTOR AND KEPT ON THE JOB SITE AT ALL TIMES.

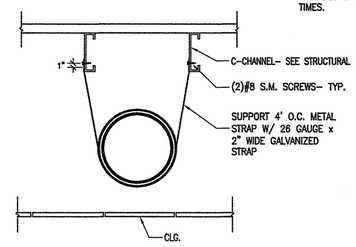

PERPENDICULAR

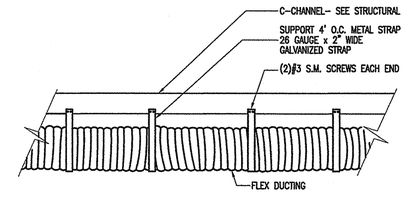

PARALLEL

② FLEX DUCT HANGERS - TYP. NTS

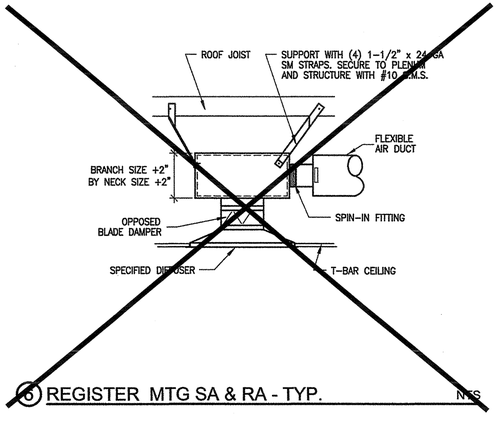

⑥ REGISTER MTG SA & RA - TYP. NTS

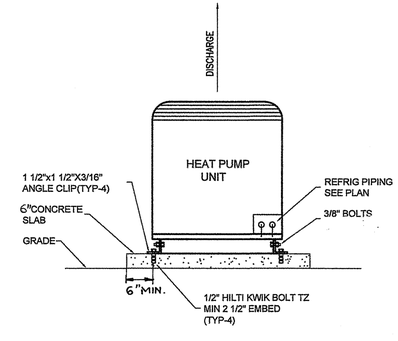

OUTDOOR UNIT

③ HEAT PUMP UNIT GROUND MTG - TYP. (ALT. A) NTS

IDENTIFICATION STAMP
DIV. OF THE STATE ARCHITECT
O2 11:009
AC FLS SS
DATE 7/23/18

JTS MODULAR
DESIGN • BUILD • TRANSPORT • ENJOY
COMMERCIAL INSTITUTIONAL AND RESIDENTIAL MODULAR BUILDINGS DESIGN & PLANNING
7001 Mc Divitt Dr.
Bakersfield, CA 93313
Office: (661) 835-9270
Plant: (661) 833-2940
Fax: (661) 847-1007
www.jtsmodular.com

LICENSE #21190
CANTELMI ENGINEERING
MECHANICAL & ELECTRICAL ENGINEERING
1800 21 STREET, SUITE C
BAKERSFIELD, CA 93301
TEL: (661) 324-5252
FAX: (661) 324-8439
Cantelmi@Cantelmi.NET

SOG-32 RE-LOCATABLE BUILDING PC

APPROVALS

IDENTIFICATION STAMP
DIV. OF THE STATE ARCHITECT

PRE CHECK (PC) DOCUMENT
CODE 2013 CBC
A SEPARATE PROJECT APPLICATION FOR CONSTRUCTION IS REQUIRED

FILE # PC-JTS
APPL# 113399
AC — FLS SS
DATE 2/19/15

DATE

PROJECT XX-XXX

REGISTERED PROFESSIONAL ENGINEER
FRANK J. CANTELMI
No. 21190
REN 6-30-2015
MECHANICAL
STATE OF CALIFORNIA
C14206 MISC REV1
PC
02-18-15

SHEET NAME
MECHANICAL DETAILS

SHEET NUMBER
M5.01

FAN-COIL UNITS

MARK	DESCRIPTION
FC 1 (A,B,C,D)	DAY & NIGHT #FXM4X4800A HORIZONTAL INDOOR FAN COIL UNIT – 1580 CFM @ 0.6"ESP – NOM. 48,000 BTUH COOLING CAPACITY – 3.8 KW ELECT. HEAT STRIP – CONDENSATE PUMP – 33.5 MCA @ 208v/1ø, 35 MOCP – ECM MOTOR – CB TYPE DISCONNECT – MICROMETL FILTER BOX w/MIN. MERV 12 FILTERS MAX. PD .12" SINGLE POINT WIRING KIT – 220 LBS – OPERATE w/HP–A,B,C & D

HEAT PUMP UNITS

MARK	DESCRIPTION
HP 1 (A,B,C,D)	DAY & NIGHT #NH4H48AHA OUTDOOR HEAT PUMP UNIT – 14 SEER NOM. 48,000 BTUH COOLING CAPACITY – LOW AMBIENT KIT – FACTORY SUPPLIED CONNECTIONS & ACCESSORIES FOR LONG REFRIG. LINE SET INSTALLED PER MFG'RS REC – 18.6 MCA @ 208/230v/3ø, 30 MOCP HACR TYPE CB DISCONNECT – 240 LBS – OPERATE w/FC–A,B,C & D

RELIEF VENT SCHEDULE

MARK	DESCRIPTION
RV 1	REFER TO SCHEDULE ON SOG–32 SHEET M5.02 ON PC 02–113899

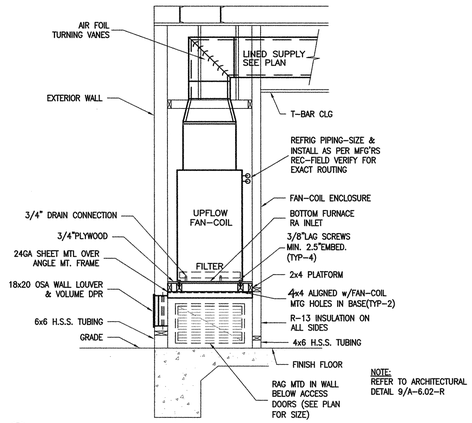

① FAN-COIL VERT. MTG NTS

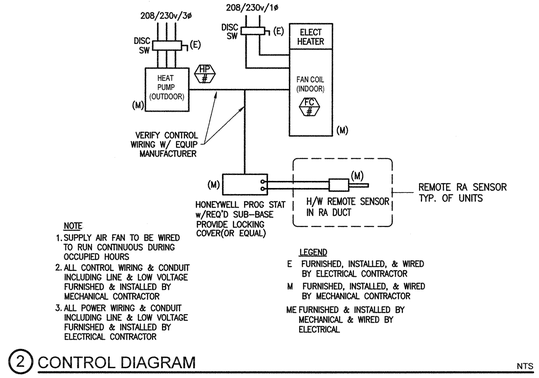

② CONTROL DIAGRAM NTS

JTS MODULAR
DESIGN • BUILD • TRANSPORT • ENJOY
7001 MC Divis DRIVE
BAKERSFIELD, CA 93313
WWW.JTSMODULAR.COM
OFFICE: (661) 835-5270

LICENSE #E18218
CANTELMI ENGINEERING
2130 F STREET
BAKERSFIELD, CA 93301
TEL: (661) 324-5252
FAX: (661) 324-8439
Cantelmi@Cantelmi.NET
7/16/18
REGISTERED PROFESSIONAL ENGINEER FRANK J. CANTELMI No. 21190 MECHANICAL STATE OF CALIFORNIA

REGISTERED PROFESSIONAL ENGINEER RYAN J. OMER No. S 4429 EXP. 12/31/18 STRUCTURAL STATE OF CALIFORNIA

MONSON - SULTANA ELEMENTARY SCHOOL
CLASSROOM - SLAB ON GRADE PC (02-113899)
10643 AVENUE 416, DINUBA, CA 93618
MONSON - SULTANA JOINT UNION ELEMENTARY SCHOOL DISTRICT

IDENTIFICATION STAMP
DIVISION OF THE STATE ARCHITECT
CODE 2013 CBC

IDENTIFICATION STAMP DIV. OF THE STATE ARCHITECT
02 117009
DATE 7/23/18

JTS JOB#: 06–0246
DATE: 7/16/2018

MECHANICAL DETAILS

M-5.02-R

file: S:\DWGS2018\JTS\MONSON SALTANA C18-117\C18-117_MECH_R3.dwg date: 7/16/2018 2:30 PM

EQUIPMENT SCHEDULE

FAN-COIL UNITS (ALT. A)

FC 1 — DAY & NIGHT #FSM4X4800A MULTI-POSITION AIR HANDLER – 1580 CFM @ .5"ESP – 3/4 HP BLOWER MOTOR – EXPANSION VALVE FOR HEAT PUMP – NOMINAL 3.8 KW ELECTRIC HEAT – SINGLE POINT WIRING KIT 33.5 MCA @ 208/230/1ø 35 AMP MOCP – LARGE FILTER KIT – OPER. WT. 210 LBS – OR EQUAL

FC 2 — DAY & NIGHT #FSM4X6000A MULTI-POSITION AIR HANDLER – 1770 CFM @ .5"ESP – 3/4 HP BLOWER MOTOR – EXPANSION VALVE FOR HEAT PUMP – NOMINAL 3.8 KW ELECTRIC HEAT – SINGLE POINT WIRING KIT 33.5 MCA @ 208/230/1ø 35 AMP MOCP – LARGE FILTER KIT – OPER. WT. 240 LBS – OR EQUAL

SPLIT SYSTEM HEAT PUMP UNITS (ALT. A)

HP 1 — DAY & NIGHT #N4H348GHE NOMINAL 4 TON HEAT PUMP – R-410A 13 SEER– HIGH & LOW PRESSURE SWITCHES– ANTI SHORT CYCLE KIT– EMERGENCY HEAT RELAY KIT – LOW AMBIENT KIT – 18.5 MCA @ 208/230/3ø 30 AMP MOCP – 300 lbs –OR EQUAL

HP 2 — DAY & NIGHT #N4H360GHB NOMINAL 5 TON HEAT PUMP – R-410A 13 SEER– HIGH & LOW PRESSURE SWITCHES– ANTI SHORT CYCLE KIT– EMERGENCY HEAT RELAY KIT – LOW AMBIENT KIT – 21.1 MCA @ 208/230/3ø 30 AMP MOCP – 300 lbs –OR EQUAL

PACKAGED HEAT PUMP UNITS (ALT. B)

PHP 1 — WALL-MOUNT HEAT PUMP
BARD #W48H2A06XXXXE HEAT PUMP NOM. 4 TON – WALL MOUNTED 9.0 EER – 1380 CFM @ .2"ESP – R-410A – 6 KW ELECTRIC HEAT KIT – 47 MCA @ 208/230v/3ph – 50 MOCP – SINGLE POINT ELECTRICAL CONNECTION – DEMAND CONTROL VENTILATION w/FAULT DETECTION DIAGNOSSTIC CONTROLS – 600 LBS

PHP 2 — WALL-MOUNT HEAT PUMP
BARD #W36H2A06XXXXE HEAT PUMP NOM. 3 TON – WALL MOUNTED 9.0 EER – 1050 CFM @ .2"ESP – R-410A – 6 KW ELECTRIC HEAT KIT – 41 MCA @ 208/230v/3ph – 45 MOCP – SINGLE POINT ELECTRICAL CONNECTION – DEMAND CONTROL VENTILATION w/FAULT DETECTION DIAGNOSSTIC CONTROLS – 440 LBS

PHP 3 — WALL-MOUNT HEAT PUMP
BARD #W60H2A09XXXXE HEAT PUMP NOM. 5 TON – WALL MOUNTED 9.0 EER – 1800 CFM @ .2"ESP – R-410A – 9 KW ELECTRIC HEAT KIT – 55 MCA @ 208/230v/3ph – 60 MOCP – SINGLE POINT ELECTRICAL CONNECTION – DEMAND CONTROL VENTILATION w/FAULT DETECTION DIAGNOSSTIC CONTROLS – 640 LBS

EXHAUST FANS

EF 1 — GREENHECK #SP-A700 CEILING EXHAUST FAN – 500 CFM @.38" SP BACKDRAFT DAMPER – 3.2 AMPS @ 120v – SPEED CONTROLLER MTD. IN FAN – 34 lbs – INTERLOCK w/LIGHTING – OR EQUAL

EF 2 — GREENHECK #SP-A200 CEILING EXHAUST FAN – 130 CFM @.38" SP BACKDRAFT DAMPER – .43 AMPS @ 120v – SPEED CONTROLLER MTD. IN FAN – 24 lbs – INTERLOCK W/ LIGHTING –OR EQUAL

EF 3 — GREENHECK #SP-A110 CEILING EXHAUST FAN – 80 CFM @.25" SP BACKDRAFT DAMPER – .58 AMPS @ 120v – SPEED CONTROLLER MTD. IN FAN – 17 lbs – INTERLOCK W/ LIGHTING –OR EQUAL

RELIEF VENTILATOR

RV 1 — BROAN #612 PRESSURE RELIEF VENTILATOR CAP 12"ø – FLASH & SEAL WATER TIGHT WITH FLAT OR CURB MOUNT INSTALLATION PER METAL ROOFING MFG'RS RECOMMENDATION –OR EQUAL

RV 2 — BROAN #641 PRESSURE RELIEF VENTILATOR CAP 8"ø – FLASH & SEAL WATER TIGHT WITH FLAT OR CURB MOUNT INSTALLATION PER METAL ROOFING MFG'RS RECOMMENDATION –OR EQUAL

INTAKE VENTILATOR

IV — BROAN #612 ROOF CAP 12"ø – FLASH & SEAL WATER TIGHT WITH FLAT OR CURB MOUNT INSTALLATION PER METAL ROOFING MFG'RS RECOMMENDATION –OR EQUAL

REGISTER SCHEDULE

SIZE / CFM	SAD – SUPPLY AIR CEILING DIFFUSER	REGISTERS TO BE TITUS OR EQUAL SUPPLY 'T'BAR CEILING–#MCD–3 w/OBD SUPPLY HARD SURFACE–#MCD–1 w/OBD
SIZE / CFM	FRAG – FILTERED RETURN AIR GRILLE	RETURN/EXHAUST 'T'BAR CEILING–#50FF w/OBD RETURN/EXHAUST HARD SURFACE–#50R w/OBD
SIZE / CFM	EAG – EXHAUST AIR GRILLE	TRANSFER GRILLE 'T'BAR CEILING–#50FF w/OBD TRANSFER GRILLE HARD SURFACE–#50R w/OBD
SIZE / CFM	TG – TRANSFER AIR GRILLE	SEE PLAN FOR ALL SIZES. SEE PLAN FOR SUPPLY AIR THROWS. CORDINATE REGISTERS w/CEILING GRID & LIGHTING.

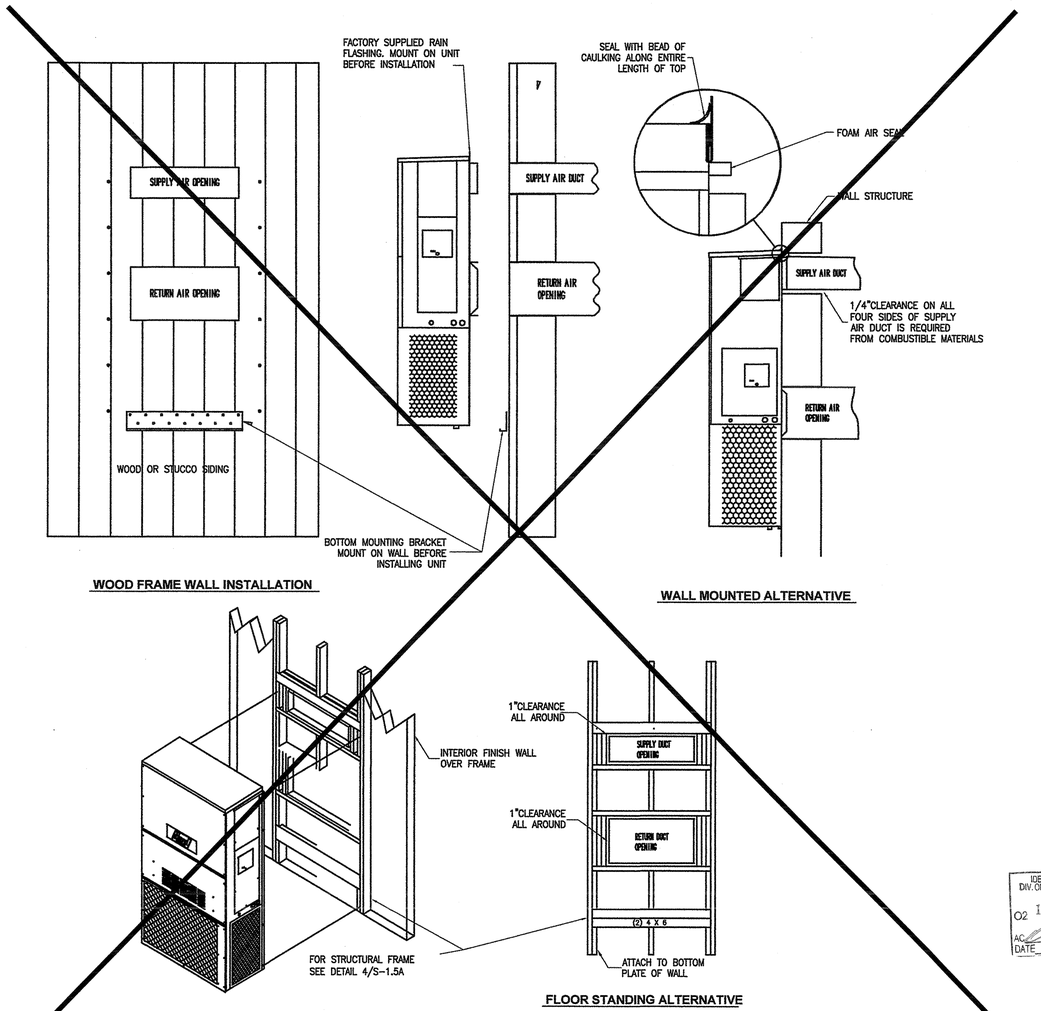

1 PACKAGED HEAT PUMP UNIT WALL MTG - TYP. (ALT.B) NTS

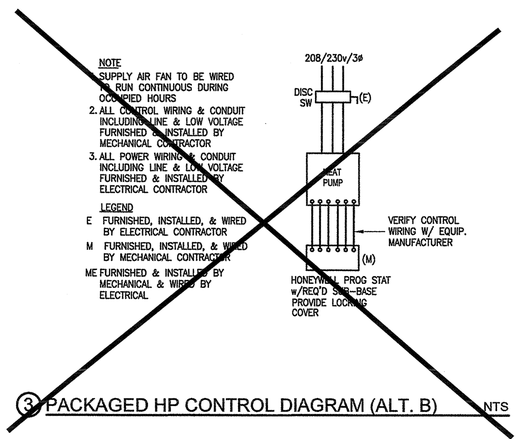

3 PACKAGED HP CONTROL DIAGRAM (ALT. B) NTS

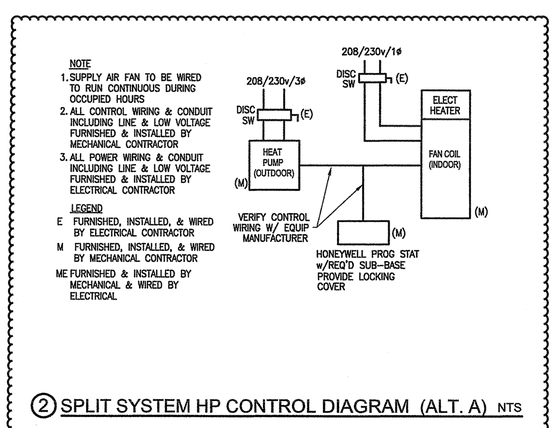

2 SPLIT SYSTEM HP CONTROL DIAGRAM (ALT. A) NTS

IDENTIFICATION STAMP
DIV. OF THE STATE ARCHITECT
O2 117009
AC FLS SS
DATE 7/23/18

JTS MODULAR
DESIGN • BUILD • TRANSPORT • ENJOY

COMMERCIAL INSTITUTIONAL AND RESIDENTIAL MODULAR BUILDINGS DESIGN & PLANNING

7001 Mc Divitt Dr.
Bakersfield, CA 93313
Office: (661) 835-9270
Plant: (661) 833-2940
Fax: (661) 847-1007
www.jtsmodular.com

LICENSE #21190
CANTELMI ENGINEERING
MECHANICAL & ELECTRICAL ENGINEERING
1800 21 STREET, SUITE C
BAKERSFIELD, CA 93301
TEL: (661) 324-5252
FAX: (661) 324-8439
Cantelmi@Cantelmi.NET

SOG-32
RE-LOCATABLE BUILDING PC

APPROVALS

IDENTIFICATION STAMP
DIV. OF THE STATE ARCHITECT

PRE CHECK (PC) DOCUMENT
CODE 2013 CBC
A SEPARATE PROJECT APPLICATION FOR CONSTRUCTION IS REQUIRED

FILE # 16-JTS
APP'02-113009
AC — F/LS — SS —
DATE 3/19/15

DATE

PROJECT XX-XXX

REGISTERED PROFESSIONAL ENGINEER
FRANK J. CANTELMI III
NO. 21190
RENEW 30-2015
MECHANICAL
STATE OF CALIFORNIA
C14200_MEP_REV1

02-18-15 PC

SHEET NAME
MECHANICAL SCHEDULE & DETAILS

SHEET NUMBER
M5.02

LIGHT FIXTURES

- CEILING SURFACEMOUNT
- WALL SURFACEMOUNT
- PENDANT MOUNT
- RECESSED DOWNLIGHT
- RECESSED WALLWASH
- RECESSED FLUOR
- SURFACE FLUOR
- FLUOR. STRIP UON
- TRACK LIGHT
- DIRECTIONAL FLOOD
- EMERGENCY FIXTURE
- POLE LIGHT
- POLE LIGHT–DECORATIVE
- UPLIGHT–FLUSH IN GRADE
- BOLLARD
- TANDEM–WIRED LAMPS
- UNDERCABINET LIGHT
- WALL SURFACEMOUNT LINEAR TYPE
- PENDANT LINEAR FLUOR
- RECESSED WALLMOUNT
- WALLPACK
- EXIT LIGHT–WALL
- EXIT LIGHT–CEILING (ARROW INDICATES DIRECTION)
- LETTER ADJACENT INDICATES FIXTURE TYPE

POWER/COMM

- SINGLE RECEPT
- DUPLEX RECEPT
- DUPLEX – CONTROLLED
- DOUBLE DUPLEX
- SPECIAL CONFIGURATION
- FLOORMOUNT 208V, 1#RECEPT
- DUPLEX–FLOOR OUTLET
- GROUND FAULT CIRCUIT INTERRUPT
- JUNCTION BOX
- SPECIAL SYSTEM JUNCTION BOX
- TELEPHONE OUTLET
- PORT# / PORT# DATA OUTLET
- PHONE/DATA COMBO OUTLET
- TELEVISION OUTLET
- SAFETY DISCONNECT
- DROP CORD RECEPT
- ABOVE–CLGMOUNT J–BOX
- TV OUTLET–FLOORMOUNT
- TELEPHONE FLOOR OUTLET
- DATA FLOOR OUTLET
- WIRELESS ACCESS POINT IN CEILING
- MOUNT DEVICE ABOVE COUNTER PER ARCHITECTURAL REQUIREMENTS

CONDUIT/WIRE

- NEW
- UNDERGROUND
- NEW POWER HOMERUN (3 HOTS & NEUT SHOWN)
- ISOLATED GROUND
- ISOLATED GROUND
- (E) POWER HOMERUUN
- WIRE LINE–CONTINUES
- CONDUIT STUB (W/MARKER)
- VERTICAL CONDUIT RUN
- CONDUIT SEAL
- FLEXIBLE CONNECTION
- LOW VOLTAGE
- SURFACEMOUNT RACEWAY
- INDICATES LINE CONTINUES
- CORD W/PLUG

FIRE ALARM

- NORN–AUDIBLE DEVICE
- VISUAL–VISUAL DEVICE
- AUDIBLE/VISUAL
- FLOW SWITCH
- TAMPER SWITCH
- MANUAL PULL STATION
- SMOKE DETECTOR
- DUCT SMOKE DETECTOR
- HEAT DETECTOR
- BELL
- END OF LINE RESISTOR
- CHIME

MISCELLANEOUS

- MOTOR
- THERMOSTAT
- CIRCUIT BREAKER
- FUSIBLE SWITCH
- GROUND
- PHASE
- CLOCK
- CLOCK/SPEAKER COMBINATION
- WALL MOUNTED CLOCK
- PUSHBUTTON
- FLUSHMOUNT PANEL
- SURFACEMOUNT PANEL
- FLUSHMOUNT PANEL
- SURFACEMOUNT PANEL
- DAMPER MOTOR
- HUMIDISTAT
- MAGNETIC CONTACTOR
- COMBINATION STARTER

SWITCHES

- $ SPST
- $2 DPST
- $3 3–WAY
- $4 4–WAY
- $D DIMMER
- $T TIMER SWITCH
- $T W/THERMAL OVERLOAD
- $P W/PILOT LIGHT
- $K KEY OPERATED
- $LS DUAL LEVEL SWITCHING
- $(a) SWITCHLEG DESIGNATION
- $OS OCCUPANCY SENSOR
- $BT BYPASS TIMER

ABBREVIATIONS

A	AMPERE
AB	AMP BREAKER
ABAND	ABANDONED
ABV	ABOVE
AC	ALTERNATING CURRENT
AC–#	AIR CONDITIONER
ADJ	ADJACENT
AF	AMP FUSE, AMP FRAME
AFF	ABOVE FINISH FLOOR
AFG	ABOVE FINISH GRADE
AIC	AMPERES INTERRUPTING CAPACITY
AI	ALUMINUM
AS	AMP SWITCH RATING
ATS	AUTOMATIC TIME SWITCH
ATS	AUTOMATIC TRANSFER SWITCH
AV	AUDIBLE/AUDIO VISUAL
AWG	AMERICAN WIRE GAGE
BFG	BELOW FINISH GRADE
BIL	BASIC IMPULSE LEVEL
BLDG	BUILDING
C	CONDUIT
–C–	CATV CONDUIT
CAB'T	CABINET
CATV	CABLE TELEVISION
CB	CIRCUIT BREAKER, CODE BLUE
CBC	CA. BUILDING CODE
CEC	CA. ELECTRICAL CODE
	CA. ENERGY COMMISSION
GF	COMPACT FLUORESCENT
CFC	CALIFORNIA FIRE CODE
CLG	CEILING
CL	CENTER LINE
CKT	CIRCUIT
CNTR	CONTRACTOR
C.O.	CONDUIT ONLY (W/PULLROPE)
COND	CONDUIT, CONDUCTOR
CR	CRITICAL BRANCH
CSFM	CALIFORNIA SFM
CT	CURRENT TRANSFORMER
CU	COPPER
CU–#	CONDENSING UNIT
D	DEPTH
DC	DIRECT CURRENT
DF	DRINKING FOUNTAIN
DIA	DIAMETER
DISC	DISCONNECT
DIST	DISTRIBUTION
DPST	DOUBLE POLE SINGLE THROW
DW	DISHWASHER
EM	EMERGENCY
(E)	EXISTING
EA	EACH
EB	ELECTRONIC BALLAST
EC	ELECTRICAL CONTRACTOR
EC–#	EVAPORATIVE COOLER
EF–#	EXHAUST FAN
EL	EVENING LIGHT
ELEC	ELECTRICAL
EM	EMERG BATTERY BACKUP
EMB	EMERGENCY BALLAST
EMERG	EMERGENCY
EOL	END OF LINE
EQUIP'T	EQUIPMENT
ES	ENERGY SAVING
(EXN)	(E) IN (N) LOCATION
(EXR)	(E) TO BE (R)
EXT	EXTERIOR
F	FLUORESCENT
(F)	FUTURE
F–#	FURNACE
FA	FIRE ALARM
FACP	FIRE ALARM CONTROL PANEL
FAT	FIRE ALARM TERMINAL
FAU	FORCED AIR UNIT
FBO	FURNISHED BY OTHERS
FC–#	FAN COIL
FLA	FULL LOAD AMPS
FLR	FLOOR
FLUOR	FLUORESCENT
FS	FUSIBLE SWITCH
FVNR	FULL VOLTAGE NON–REVERSING
G	GROUNDING CONDUCTOR
GC	GENERAL CONTRACTOR
GD	GARBAGE DISPOSAL
GFCI	GROUND FAULT CIRCUIT INTERRUPTER
GFI	GROUND FAULT CIRCUIT INTERRUPTER
GND	GROUND
GRS	GALVANIZED RIGID STEEL
GWS	GANG WITH SWITCH
H	HEIGHT, HIGH
HACR	HEATING, AC & REFRIG
HID	HIGH INTENSITY DISCHARGE
HO	HIGH OUTPUT
HOA	HAND–OFF–AUTO
hp	HORSEPOWER
HPF	HIGH POWER FACTOR
HPS	HIGH PRESSURE SODIUM
IC	INTERCOM
ID	IDENTIFICATION
IF	INSIDE FROST
IG	ISOLATED GROUND
J–BOX	JUNCTION BOX
K	QUANTITY 1000
kVA	KILOVOLTAMPS
kW	KILOWATT
LC	LIGHTING CONTACTOR
LPS	LOW PRESSURE SODIUM
LRA	LOCKED ROTOR AMPS
LS	LIFE SAFETY BRANCH
LT	LIGHT
LTG	LIGHTING
LV	LOW VOLTAGE
MC	MECHANICAL CONTRACTOR
MCA	MINIMUM CKT AMPS
MCB	MAIN CIRCUIT BREAKER
MCTB	MAIN CATV TERMINAL BOARD
MCTC	MAIN CATV TERMINAL CABINET
MECH	MECHANICAL
MFR	MANUFACTURER
MFS	MAIN FUSIBLE SWITCH
MH	METAL HALIDE
MLO	MAIN LUGS ONLY
MOCP	MAXIMUM OCP
MSB	MAIN SWITCHBOARD
MT	MOUNT
MT HT	MOUNTING HEIGHT
MTS	MANUAL TRANSFER SWITCH
MTTB	MAIN TELEPHONE TERMINAL BOARD
MTTC	MAIN TELEPHONE TERMINAL CABINET
MW	MICROWAVE
N	NEUTRAL (GROUNDED CONDUCTOR)
(N)	NEW
N3R	NEMA 3R
NC	NORMALLY CLOSED
NEC	NATIONAL ELECTRICAL CODE
NEMA	NAT'L ELEC MANUFACTURER'S ASSOC
NIC	NOT IN CONTRACT
NL	NIGHT LIGHT
NO	NORMALLY OPEN
NPF	NORMAL POWER FACTOR
NTS	NOT TO SCALE
OC	ON CENTER
OCP	OVERCURRENT PROTECTION
OD	OUTSIDE DIAMETER
OH	OVERHEAD
OSA	OFFICE of the STATE ARCHITECT
OSHPD	OFFICE of STATEWIDE HEALTH PLANNING & DEVELOPMENT
OVLD	OVERLOAD
P	POLE
PA	PUBLIC ADDRESS
PB	PULLBOX
PC	PULL CHAIN
PC	PHOTOCELL
ph	PHASE
PNL	PANEL
POC	POINT OF CONNECTION
–PP–	POWER PRIMARY
–PS–	POWER SECONDARY
(R)	RELOCATE(D)
RECEPT	RECEPTACLE
REF	REFRIGERATOR
REQ'D	REQUIRED
RLA	RATED LOAD AMPS
RM	ROOM
RMC	RIGID METAL CONDUIT
RMV	REMOVE
RPLC	REPLACE
RS	RAPID START
SC	SIGNAL CABINET
SCC	SHORT CKT CURRENT
SFM	STATE FIRE MARSHAL
SHT	SHEET
SL	SLIMLINE, SWITCH LEG
SPEC	SPECIFICATION
SPST	SINGLE POLE SINGLE THROW
SQ	SQUARE
STR'G	STORAGE
SURF	SURFACE
SVC	SERVICE
SW	SWITCH
T	TRANSFORMER, TERMINAL
–T–	TELEPHONE CONDUIT
TBR	TO BE REMOVED
TC	TIME CLOCK
TEL	TELEPHONE
TELCO	TELEPHONE COMPANY
TS	TIME SWITCH
TSO	TIME SWITCH OVERRIDE
TSP	TWISTED SHIELDED PAIR
TTB	TELEPHONE TERMINAL BOARD
TTC	TELEPHONE TERMINAL CABINET
TX	TRANSFORMER
TYP	TYPICAL
TYP SIM	TYPICAL SIMILAR
UC	UNDERCABINET, UNDERCOUNTER
UG	UNDERGROUND
UGPS	UNDERGROUND PULL SECTION
UL	UNDERWRITERS LABORATORIES
UON	UNLESS OTHERWISE NOTED
USA	UG SVC ALERT 800–642–24444
V	VOLT
VA	VOLT AMPERES
VAC	VOLT ALTERNATING CURRENT
VHO	VERY HIGH OUTPUT
VOLT	VOLTAGE
VR	VANDAL–RESISTANT
W	WIDTH, WATT, WIRE
WH–#	WATER HEATER
WP	WEATHERPROOF (NEMA 3R)
XFMR	TRANSFORMER
+48	INDICATES MOUNTING HEIGHT AFF

GENERAL LIGHTING PLAN NOTES

- DUAL LEVEL SWITCHING: IN ROOMS 100 SQ. FT. OR LARGER, OR WHERE INDICATED ON PLANS, CONTROL INBOARD LAMPS BY ONE SWITCH AND OUTBOARD LAMPS BY OTHER SWITCH
- NIGHT LIGHT (NL) DESIGNATED LUMINARIES IN INTERIOR LOCATIONS SHALL HAVE ONE BALLAST CONTINUOUSLY ENERGIZED. LUMINARIES IN EXTERIOR LOCATIONS SHALL BE AUTOMATICALLY CONTROLLED TO BE ON FROM DUSK TO DAWN
- LIGHTING FIXTURE LOCATIONS SHOWN ARE SCHEMATIC. REFER TO ARCHITECTURAL PLANS (REFLECTED CEILING, ELEVATIONS, ETC.) FOR EXACT LOCATIONS AND MOUNTING HEIGHTS PRIOR TO ROUGH–IN
- REFER TO ARCHITECT'S REFLECTED CEILING PLAN(S) FOR CEILING HEIGHTS, TYPES, FINISHES, ETC. IN EACH AREA. VERIFY FLANGE TYPES, TRIM KITS, STEM LENGTHS, ETC. FOR ALL FIXTURES PRIOR TO SUBMITTALS.
- CONFIRM LOCATION OF ALL DOORS SWINGS WITH ARCHITECTURAL PLANS PRIOR TO ROUGH–IN OF SWITCHES.
- PROVIDE UNSWITCHED HOT LEG OF ROOM LIGHTING BRANCH CIRCUIT TO EACH BATTERY POWERED EMERGENCY LIGHT AND EXIT SIGN FOR CONTINUOUS CHARGING

GENERAL POWER PLAN NOTES

- FUSING: ALL FUSIBLE SAFETY DISCONNECT SWITCHES SHALL BE PROVIDED WITH DUAL–ELEMENT TIME DELAY TYPE FUSES SIZED AND RATED PER EQUIPMENT MANUFACTURERS' RECOMMENDATIONS. VERIFY WITH EQUIPMENT NAMEPLATE BEFORE INSTALLATION.
- INSTALL SEPARATE NEUTRALS FOR EACH BRANCH CIRCUIT SERVING ISOLATED GROUND RECEPTACLES.
- MOTOR OVERLOAD PROTECTION: WHERE REQUIRED BY NEC ARTICLE 430 PART C AND NOT SHOW ON PLAN OR PROVIDED INTEGRAL WITH EQUIPMENT, PROVIDE AND INSTALL THERMAL OVERLOAD PROTECTION FOR ALL MOTORS.
- SPARE CONDUIT FOR RECESSED PANELS: PROVIDE (1) 3/4" SPARE CONDUIT STUB UP TO ACCESSIBLE ABOVE CEILING SPACE AND/OR ACCESSIBLE SPACE BELOW FOR EVERY (3) SPARE BREAKER SPACES AS INDICATED ON PANEL SCHEDULES.
- DEVICE LOCATIONS SHOWN ARE SCHEMATIC AND APPROXIMATE. EXACT LOCATIONS SHALL BE FIELD VERIFIED DURING ROUGH–IN WITH ARCHITECTURAL ELEVATIONS, CASEWORK SHOP DRAWINGS, FURNITURE, ETC. AND SHALL BE COORDINATED WITH OTHER TRADES TO AVOID CONFLICT WITH OTHER EQUIPMENT.
- ELECTRICAL AND COMMUNICATIONS OUTLETS SHOWN IN THE SAME LOCATION, SHALL BE MOUNTED ON OPPOSITE SIDES OF THE SAME STUD. COORDINATE BETWEEN ELECTRICAL AND COMMUNICATIONS PLANS.

GENERAL COMMUNICATION PLAN NOTES

- SIGNAL AND COMMUNICATIONS SYSTEMS RACEWAYS AND BOXES: PROVIDE AND INSTALL 4" SQUARE RECESSED JUNCTION BOX WITH 1–GANG RING AND (1) 3/4" CONDUIT STUB TO ACCESSIBLE CEILING SPACE AT EACH WALL TELEPHONE (VOICE), TELEVISION AND DATA OUTLET LOCATION SHOWN ON THE PLANS UNLESS OTHERWISE NOTED. FOR EACH COMBINATION VOICE/DATA OUTLET, PROVIDE AND INSTALL (2) 3/4" CONDUIT STUBS TO ACCESSIBLE CEILING SPACE.

  BEFORE CONSTRUCTION, COORDINATE AND VERIFY ALL DATA AND TELEPHONE LOCATIONS WITH OWNER OR ARCHITECT
- TELEPHONE WIRING: EACH TELEPHONE OUTLET LOCATION SHOWN ON THE PLANS SHALL HAVE A 4 PAIR, 24 GAUGE CONTINUOUS CABLE, CATEGORY 6 (BERK–TEK LANMARK SERIES OR APPROVED EQUAL), HOMERUN TO THE TELEPHONE TERMINAL BOARD "TTB" TERMINATE AT OUTLET LOCATION WITH OWNER APPROVED JACK, VERIFY LOCATIONS WITH OWNER OR ARCHITECT PRIOR TO CONSTRUCTION.
- TELEVISION PREWIRE: EACH TELEVISION OUTLET SHOWN ON THE PLANS SHALL HAVE AN RG6U (WITH QUAD SHIELD) COAXIAL CABLE HOMERUN PREWIRED TO THE CATV TERMINAL BOARD LABEL AND LEAVE ADEQUATE SLACK FOR UTILITY CONNECTION.
- VOICE/DATA WIRING: EACH VOICE/DATA OUTLET LOCATION SHOWN ON THE PLANS SHALL HAVE (4) 4 PAIR, 24 GAUGE, CATEGORY 6, UTP CABLES (BERK–TEK LANMARK SERIES OR APPROVED EQUAL) HOMERUN TO THE TELEPHONE TERMINAL BOARD. TERMINATE AT OUTLET LOCATION WITH OWNER APPROVED JACK. VERIFY SYSTEM REQUIREMENTS WITH OWNER OR ARCHITECT PRIOR TO CONSTRUCTION.
- DEVICE LOCATIONS SHOWN ARE SCHEMATIC AND APPROXIMATE. EXACT LOCATIONS SHALL BE FIELD VERIFIED DURING ROUGH–IN WITH ARCHITECTURAL ELEVATIONS, CASEWORK SHOP DRAWINGS, FURNITURE, ETC. AND SHALL BE COORDINATED WITH OTHER TRADES TO AVOID CONFLICT WITH OTHER EQUIPMENT.
- ELECTRICAL AND COMMUNICATIONS OUTLETS SHOWN IN THE SAME LOCATION, SHALL BE MOUNTED ON OPPOSITE SIDES OF THE SAME STUD. COORDINATE BETWEEN ELECTRICAL AND COMMUNICATIONS PLANS.

TITLE 24 CODES:

2013 CALIFORNIA ADMINISTRATIVE CODE (CAC) . . . . . (PART 1, TITLE 24, CCR)

2013 CALIFORNIA BUILDING CODE (CBC), VOLUMES 1 & 2 . . (PART 2, TITLE 24, CCR)
(2012 EDITION INTERNATIONAL BUILDING CODE WITH 2013 CALIFORNIA AMENDMENTS)

2013 CALIFORNIA ELECTRICAL CODE . . . . . .(PART 3, TITLE 24, CCR)
(2011 EDITION NATIONAL ELECTRICAL CODE WITH 2013 CALIFORNIA AMENDMENTS)

2013 CALIFORNIA MECHANICAL CODE (CMC). . . . . (PART 4, TITLE 24, CCR)
(2012 EDITION IAPMO UNIFORM MECHANICAL CODE WITH 2013 CALIFORNIA AMENDMENTS)

2013 CALIFORNIA PLUMBING CODE (CPC) . . . . . .(PART 5, TITLE 24, CCR)
(2012 EDITION IAPMO UNIFORM PLUMBING CODE WITH 2013 CALIFORNIA AMENDMENTS)

2013 CALIFORNIA ENERGY CODE . . . . . (PART 6, TITLE 24, CCR)
(2012 EDITION CALIFORNIA ENERGY COMMISSION BUILDING ENERGY EFFICIENCY STANDARDS)

2013 CALIFORNIA FIRE CODE (CFC) . . . . . .(PART 9, TITLE 24, CCR)
(2012 EDITION OF INTERNATIONAL FIRE CODE WITH 2013 CALIFORNIA AMENDMENTS)

2013 CALIFORNIA GREEN CODE . . . . . (PART 11, TITLE 24, CCR)

2013 CALIFORNIA REFERENCED STANDARDS CODE . . . . . .(PART 12, TITLE 24, CCR)
NFPA 13 – 2013
NFPA 72 – 2013
REFERENCED CODE SECTIONS FOR APPLICABLE STANDARDS
2013 CBC, CHAPTER 35
2013 CFC, CHAPTER 45

GENERAL NOTES

1. CODE COMPLIANCE ALL WORK SHALL CONFORM TO AND BE PERFORMED IN ACCORDANCE WITH CODES, STANDARDS AND ORDINANCES AS SET FORTH BY THE AUTHORITIES HAVING JURISDICTION AND THEIR LATEST ADOPTED EDITIONS (IN EFFECT AT TIME OF BUILDING PERMIT APPLICATION) OF THE FOLLOWING PUBLICATIONS:

   A. CALIFORNIA CODE OF REGULATIONS TITLE 24; INCLUDES 2004 NATIONAL ELECTRICAL CODE, UNIFORM FIRE CODE, UNIFORM BUILDING CODE, ETC. WITH CALIFORNIA AND OTHER LOCAL AMENDMENTS AS APPLICABLE.

   B. AMERICANS WITH DISABILITIES ACT (ADA)

2. SAFETY: THE ELECTRICAL CONTRACTOR IS RESPONSIBLE TO MAINTAIN ALL EQUIPMENT IN A SAFE AND RESPONSIBLE MANNER. KEEP DEAD FRONT EQUIPMENT IN PLACE WHILE EQUIPMENT IS ENERGIZED. CONDUCT ALL CONSTRUCTION OPERATIONS IN A SAFE MANNER FOR EMPLOYEES AS WELL AS OTHER WORKPERSONS OR ANYONE VISITING THE JOB SITE. PROVIDE BARRIERS, FLAGS, TAPE, ETC. AS REQUIRED FOR SAFETY. THE CONTRACTOR SHALL HOLD ALL PARTIES HARMLESS OF NEGLIGENT SAFETY PRACTICES, WHICH MAY CAUSE INJURY TO OTHERS ON OR NEAR THE JOB SITE.
3. FIRE RATED ASSEMBLIES SHALL MAINTAIN RATINGS AS SPECIFIED IN THE CALIFORNIA BUILDING CODE CHAPTER 7. CONTRACTOR SHALL PROVIDE AND INSTALL PHYSICAL ENCLOSURE AROUND FIXTURES, PANELS, ETC. AS REQUIRED. ALL ASSEMBLIES TO BE PENETRATED SHALL BE INSTALLED WITH APPLICABLE THROUGH–PENETRATION FIRESTOP SYSTEM AS DETERMINED BY UL CLASSIFICATION. BEFORE CONSTRUCTION, VERIFY AND COMPLY WITH REQUIREMENTS OF LOCAL AUTHORITY HAVING JURISDICTION.
4. MOUNTING HEIGHTS IN INCHES TO CENTERLINE ABOVE FINISH FLOOR SHALL BE AS FOLLOWS UNLESS OTHERWISE NOTED:

   +18" AFF: RECEPTACLES, TELEPHONE, TV & DATA OUTLETS
   +48" AFF: LIGHT SWITCHES TOP OF BOX
   +48" AFF: FIRE ~~ALARM MANUAL PULL STATIONS~~, T–STATS (TOP OF BOX)
   +80" AFF OR 6" BELOW CEILING (WHICHEVER IS LOWER): FIRE ALARM VISUALS
   +42"–48" FIRE ALARM PULL STATIONS, OPERATING HANDLE

   BEFORE ROUGH–IN, VERIFY ALL MOUNTING HEIGHTS AND EXACT LOCATIONS FOR ALL EQUIPMENT ELECTRICAL CONNECTIONS, STUB–UPS, RECEPTACLES, OUTLETS, ETC. WITH ARCHITECT OR OWNER. PLACE DEVICES LOCATED ABOVE COUNTERS, SHELVING, ETC. AND BATHROOMS SO AS NOT TO CONFLICT WITH EDGES OF WAINSCOTING, COUNTER SPLASH, SHELVING, ETC. ARCHITECTURAL SHEETS SHALL GOVERN.
5. LABEL PANELS, CABINETS, BACKBOARDS, MAIN DEVICES, SAFETY SWITCHES, CONTACTORS AND OTHER SPECIFICALLY DESIGNATED EQUIPMENT SHOWN ON PLANS. USE ENGRAVED LAMINATED PLASTIC NAMEPLATES ATTACHED BY SCREWS OR RIVETS. FOR FEEDERS, NEATLY AND INDELIBLY LABEL CONDUIT DESTINATIONS ON BOTH VISIBLE ENDS OF CONDUIT RUNS WHERE CONDUITS TERMINATE AT DESIGNATED ENCLOSURES, STRUCTURES OR EQUIPMENT (INCLUDING PULL AND SPLICE BOXES)
6. EQUIPMENT ANCHORAGE: BRACE OR ANCHOR ALL ELECTRICAL EQUIPMENT TO RESIST A HORIZONTAL FORCE ACTING IN ANY DIRECTION. USE THE FOLLOWING CRITERIA FOR DETERMINING:

   A. FIXED EQUIPMENT ON GRADE 30% OF OPERATING WEIGHT.
   B. FIXED EQUIPMENT ON STRUCTURE 45% OF OPERATING WEIGHT.
   C. EMERGENCY POWER EQUIPMENT ON GRADE 40% OF OPERATING WEIGHT.
   D. EMERGENCY POWER EQUIPMENT ON STRUCTURE 60% OF OPERATING WEIGHT.

   EXCEPTIONS: FOR FLEXIBLY MOUNTED EQUIPMENT USE 4X THE ABOVE VALUES; FOR SIMULTANEOUS VERTICAL FORCE, USE ½X HORIZONTAL FORCE. SEE STRUCTURAL PLANS FOR ANCHORAGE DETAILS AND WHERE ANCHORAGE DETAILS ARE NOT SHOWN ON THE DRAWINGS, THE FIELD INSTA INSTALLATION SHALL BE SUBJECT TO THE APPROVAL OF THE STRUCTURAL ENGINEER AND THE FIELD REPRESENTATIVE OF THE AUTHORITY HAVING JURISDICTION. SHOULD SAID APPROVAL BE WITHHELD, ELECTRICAL CONTRACTOR SHALL, AT NO EXTRA COST TO THE OWNER, MODIFY AND JUSTIFY INSTALLATION AS REQUIRED TO GAIN APPROVAL.

MECHANICAL SYSTEMS

1. MECHANICAL UNIT CONDUITS: TO PREVENT DAMAGE DUE TO VIBRATION, BOTH POWER AND CONTROL WIRING CONDUITS FEEDING EXTERIOR MECHANICAL UNITS SHALL BE PROVIDED AND INSTALLED BY ELECTRICAL CONTRACTOR WITH LIQUID TIGHT FLEXIBLE TYPE AT FINAL CONNECTION TO UNIT AND BETWEEN ROOF JACK AND DISCONNECT SWITCH WHERE DISCONNECT IS MOUNTED ON UNIT.
2. NOT USED
3. T–STAT J–BOXES: PROVIDE AND INSTALL 4" SQUARE JUNCTION BOX WITH 1–GANG RING AND 1/2" CONDUIT TO ACCESSIBLE CEILING SPACE ABOVE AT EACH THERMOSTAT LOCATION
4. EXHAUST FANS SHALL BE PROVIDED & INSTALLED BY MECHANICAL CONTRACTOR WITH WIRING CONNECTIONS MADE BY ELECTRICAL CONTRACTOR
5. MECHANICAL EQUIPMENT CONTROLS: MECHANICAL CONTRACTOR SHALL BE RESPONSIBLE FOR ALL LOW VOLTAGE WIRE AND CONNECTIONS (BELOW 120 VOLT) TO AND FROM ALL MECHANICAL CONTROL DEVICES. ALL LOW VOLTAGE CONTROL WIRE SHALL BE IN CONDUIT, UNLESS OTHERWISE NOTED.
6. PULL ROPES: ANY RACEWAY WITHOUT CABLE OR WIRE SHALL BE INSTALLED WITH MINIMUM 200 POUND TEST PULL LINE AND LARGER IF REQUIRED BY SERVING UTILITY COMPANY. ANY NEW OR EXISTING COMMUNICATION OR SIGNAL RACEWAY ROUTED BETWEEN BUILDINGS, SIGNAL CABINETS, AND/OR SIGNAL CLOSETS WITH FUTURE CAPACITY SHALL BE INSTALLED WITH MINIMUM 200 POUND TEST PULL LINE AS WELL AS THE CALLED FOR CABLE

FIRE ALARM SYSTEM

1. PROVIDE ALL WORK AND MATERIAL REQUIRED TO INSTALL DELAY EXIT PANIC HARDWARE IN COMPLIANCE WITH CBC 1003.3.1.10
2. DUCT SMOKE DETECTORS SHALL BE PROVIDED BY ELECTRICAL CONTRACTOR AND INSTALLED BY MECHANICAL CONTRACTOR. DETECTOR POWER AND SUPERVISORY WIRING AND CONNECTIONS SHALL BE MADE BY ELECTRICAL CONTRACTOR. MECHANICAL UNIT CONTROL (SHUTDOWN UPON DETECTOR ALARM) WIRING AND CONNECTIONS SHALL BE MADE BY MECHANICAL CONTRACTOR

MEP COMPONENT ANCHORAGE NOTE

ALL MECHANICAL, PLUMBING, AND ELECTRICAL COMPONENTS SHALL BE ANCHORED AND INSTALLED PER THE DETAILS ON THE DSA APPROVED CONSTRUCTION DOCUMENTS. WHERE NO DETAIL IS INDICATED, THE FOLLOWING COMPONENTS SHALL BE ANCHORED OR BRACED TO MEET THE FORCE AND DISPLACEMENT REQUIREMENTS PRESCRIBED IN THE 2013 CBC, SECTIONS 1616A.1.18 THROUGH 1616A.1.26 ANS ASCE 7–10 CHAPTER 13, 26 AND 30.

1. ALL PERMANENT EQUIPMENT AND COMPONENTS.
2. TEMPORARY OR MOVABLE EQUIPMENT THAT IS PERMANENTLY ATTACHED (E.G. HARD WIRED) TO THE BUILDING UTILITY SERVICES SUCH AS ELECTRICITY GAS OR WATER.
3. MOVABLY EQUIPMENT WHICH IS STATIONED IN ONE PLACE FOR MORE THAN 8 HOURS AND HEAVIER THAN 400 POUNDS ARE REQUIRED TO BE ANCHORED WITH TEMPORARY ATTACHMENTS.

THE ATTACHMENT OF THE FOLLOWING MECHANICAL AND ELECTRICAL COMPONENTS SHALL BE POSITIVELY ATTACHED TO THE STRUCTURE, BUT NEED NOT BE DETAILED ON THE PLANS. THESE COMPONENTS SHALL HAVE FLEXIBLE CONNECTIONS PROVIDED BETWEEN THE COMPONENT AND ASSOCIATED DUCTWORK, PIPING, AND CONDUIT.

A. COMPONENTS WEIGHING LESS THAN 400 POUNDS AND HAVE A CENTER OF MASS LOCATED 4 FEET OR LESS ABOVE THE ADJACENT FLOOR OR ROOF LEVEL THAT DIRECTLY SUPPORT THE COMPONENT.
B. COMPONENTS WEIGHING LESS THAN 20 POUNDS, OR IN THE CASE OF DISTRIBUTED SYSTEMS LEES THAN 5 POUNDS PER FOOT, WHICH ARE SUSPENDED FROM A ROOF OR FLOOR OR HUNG FROM A WALL.

FOR THOSE ELEMENTS THAT DO NOT REQUIRE DETAILS ON APPROVED DRAWINGS, THE INSTALLATION SHALL BE SUBJECT TO THE APPROVAL OF THE STRUCTURAL ENGINEER OF RECORD AND THE DSA DISTRICT STRUCTURAL ENGINEER. THE PROJECT INSPECTOR WILL VERIFY THAT ALL COMPONENTS AND EQUIPMENT HAVE BEEN ANCHORED IN ACCORDANCE WITH ABOVE REQUIREMENTS.

PLUMBING, DUCTWORK, AND ELECTRICAL DISTRIBUTION SYSTEM BRACING NOTE

PIPING, DUCTWORK, AND ELECTRICAL DISTRIBUTION SYSTEMS SHALL BE BRACED TO COMPLY WITH THE FORCES AND DISPLACEMENTS PRESCRIBED IN ASCE 7–10 SECTION 13.3 AS DEFINED IN ASCE 7–10 SECTION 13.6.8, 13.6.7, 13.6.5.6, AND 2013 CBC, SECTIONS 1616A.1.23, 1616A.1.24, 1616A.1.25 AND 1616A.1.26

THE BRACING AND ATTACHMENTS TO THE STRUCTURE SHALL BE DETAILED ON THE APPROVED DRAWINGS OR THEY SHALL COMPLY WITH ONE OF THE OSHPD PRE–APPROVALS (OPM#) AS MODIFIED TO SATISFY ANCHORAGE REQUIREMENTS OF ACI 318, APPENDIX D.

COPIES OF THE MANUAL SHALL BE AVAILABLE ON THE JOBSITE PRIOR TO THE START OF HANGING AND BRACING OF THE PIPE, DUCTWORK, AND ELECTRICAL DISTRIBUTION SYSTEMS.

THE STRUCTURAL ENGINEER OF RECORD SHALL VERIFY THE ADEQUACY OF THE STRUCTURE TO SUPPORT THE HANGER AND BRACE LOADS

IDENTIFICATION STAMP
DIV. OF THE STATE ARCHITECT
02 117008
AC PS SS
DATE 7/23/18

JTS MODULAR
DESIGN • BUILD • TRANSPORT • ENJOY

COMMERCIAL INSTITUTIONAL AND RESIDENTIAL MODULAR BUILDINGS DESIGN & PLANNING

7001 Mc Divitt Dr.
Bakersfield, CA 93313
Office: (661) 835-9270
Plant: (661) 833-2940
Fax: (661) 847-1007
www.jtsmodular.com

LICENSE #E18218
CANTELMI ENGINEERING
MECHANICAL & ELECTRICAL ENGINEERING
1800 21 STREET, SUITE C
BAKERSFIELD, CA 93301
TEL: (661) 324–5252
FAX: (661) 324–8439
Cantelmi@Cantelmi.NET

SOG-32
RE-LOCATABLE BUILDING PC

APPROVALS

IDENTIFICATION STAMP
DIV. OF THE STATE ARCHITECT

PRE CHECK (PC) DOCUMENT
CODE 2013 CBC
A SEPARATE PROJECT APPLICATION FOR CONSTRUCTION IS REQUIRED

FILE # PC-115
APPL# 02-113899
AC PS SS
DATE 2/19/15

DATE

PROJECT XX-XXX

REGISTERED PROFESSIONAL ENGINEER
RAMON A. CANTELMI
No. 18218
REN 12-31-2015
ELECTRICAL
STATE OF CALIFORNIA

C14200_MEP_REV1

02–18–15 PC

SHEET NAME
ELECTRICAL NOTES

SHEET NUMBER
E0.01

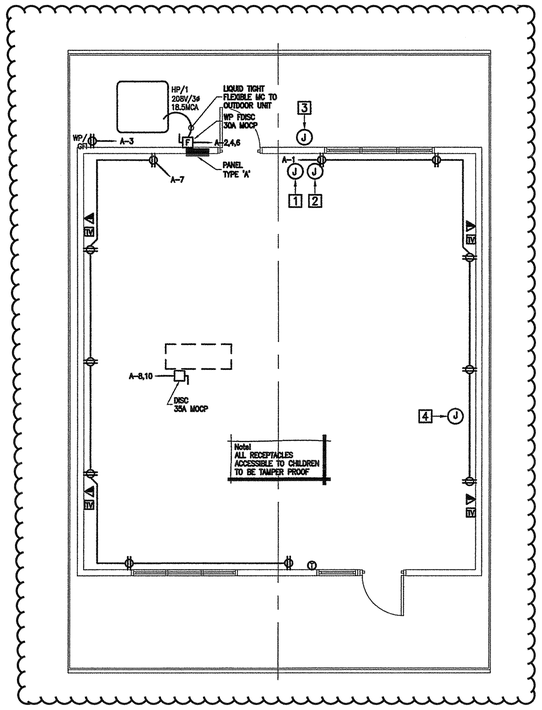

1 **SOG 32 - POWER PLAN - 2M (ALTERNATE 'A')**
SCALE: 3/16" = 1'-0"

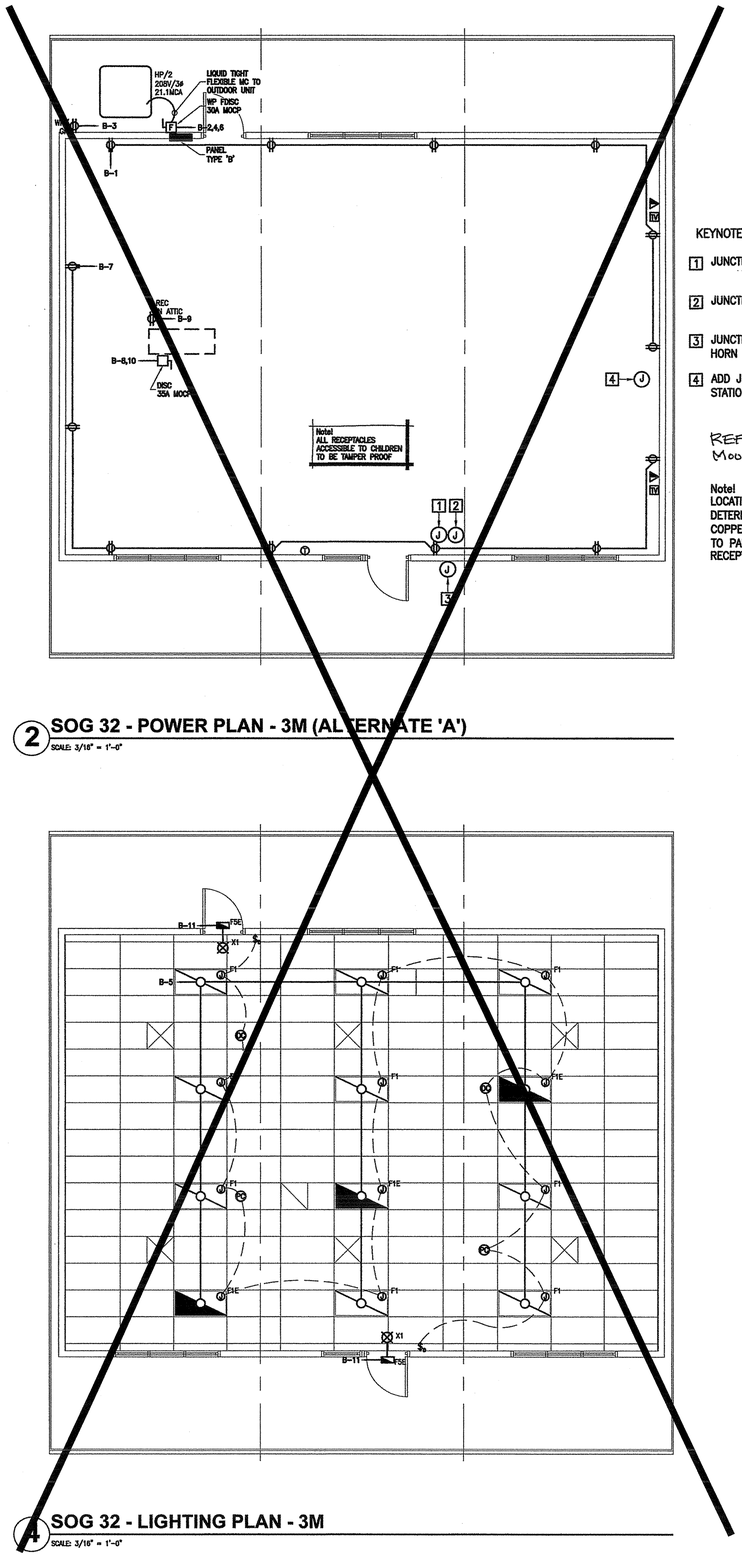

2 **SOG 32 - POWER PLAN - 3M (ALTERNATE 'A')**
SCALE: 3/16" = 1'-0"

KEYNOTES

1. JUNCTION BOX FOR FIRE ALARM PULL STATION WITH CONDUIT STUBBED TO ATTIC
2. JUNCTION BOX FOR FIRE ALARM VISUAL DEVICE WITH CONDUIT STUBBED TO ATTIC
3. JUNCTION BOX FOR FIRE ALARM EXTERIOR HORN
4. ADD JUNCTION BOX FOR FIRE ALARM PULL STATION

REFER TO E0.01 FOR MOUNTING HEIGHTS.

Note!
LOCATION OF TELECOMMUNICATIONS CABINET DETERMINED IN FIELD. PROVIDE (1)6'x5/8"DIA COPPER CLAD STEEL GROUND ROD w/(1)#6G TO PANEL GROUND – PROVIDE (1) QUAD-PLEX RECEPTACLE IN CABINET TO CKT 3

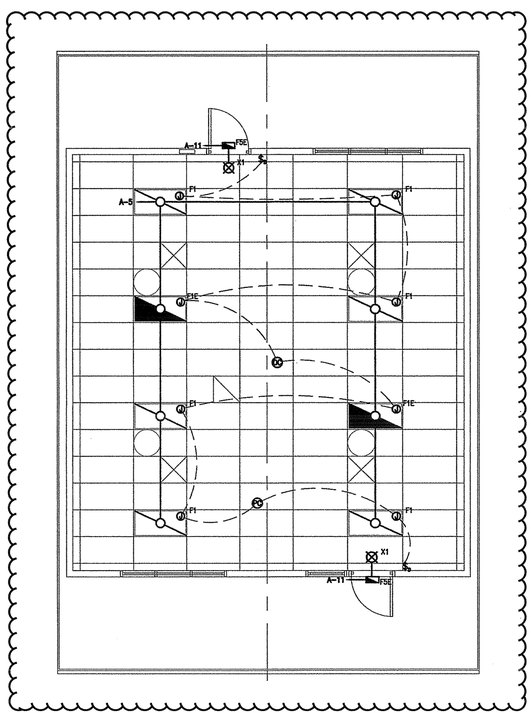

3 **SOG 32 - LIGHTING PLAN - 2M**
SCALE: 3/16" = 1'-0"

4 **SOG 32 - LIGHTING PLAN - 3M**
SCALE: 3/16" = 1'-0"

IDENTIFICATION STAMP
DIV. OF THE STATE ARCHITECT
02 117009
AC FLS SS
DATE 7/23/18

JTS MODULAR
DESIGN • BUILD • TRANSPORT • ENJOY

COMMERCIAL INSTITUTIONAL AND RESIDENTIAL MODULAR BUILDINGS DESIGN & PLANNING

7001 Mc Divitt Dr.
Bakersfield, CA 93313
Office: (661) 835-9270
Plant: (661) 833-2940
Fax: (661) 847-1007
www.jtsmodular.com

LICENSE #E18218
CANTELMI ENGINEERING
MECHANICAL & ELECTRICAL ENGINEERING
1800 21 STREET, SUITE C
BAKERSFIELD, CA 93301
TEL: (661) 324-5252
FAX: (661) 324-8439
Cantelmi@Cantelmi.NET

SOG-32 RE-LOCATABLE BUILDING PC

APPROVALS

IDENTIFICATION STAMP
DIV. OF THE STATE ARCHITECT

PRE CHECK (PC) DOCUMENT
CODE 2013 CBC
A SEPARATE PROJECT APPLICATION FOR CONSTRUCTION IS REQUIRED

FILE # PC-JTS
APPL 02-113099
AC FLS SS
DATE 3/19/15

DATE

PROJECT XX-XXX

REGISTERED PROFESSIONAL ENGINEER
KARL MARTINEZ
NO. E18218
REN 12-31-2015
ELECTRICAL
STATE OF CALIFORNIA

C14200_MEP_REV1

02-18-15 PC

SHEET NAME
ELECTRICAL PLANS: 2M & 3M

SHEET NUMBER
E1.01

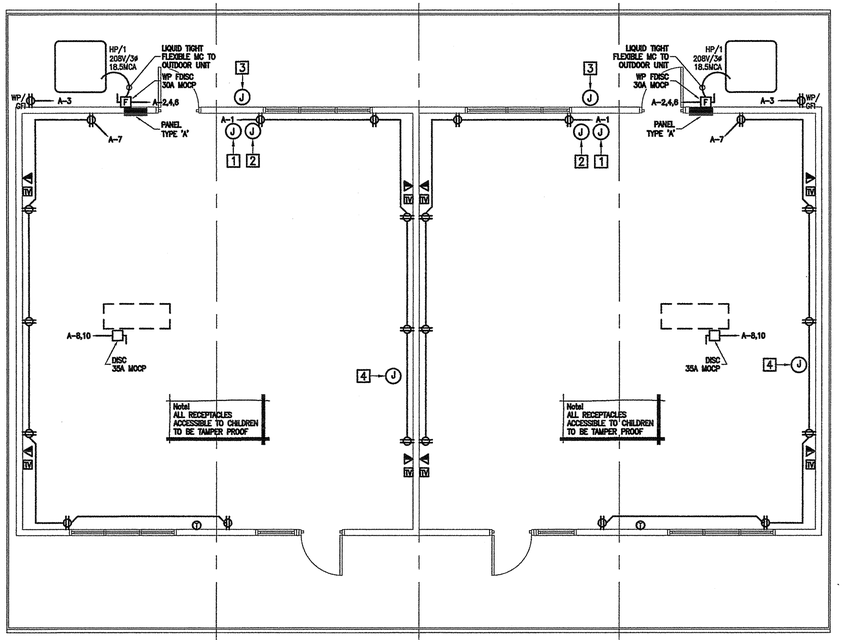

1 SOG 32 - POWER PLAN - 4M (ALTERNATE 'A')
SCALE: 3/16" = 1'-0"

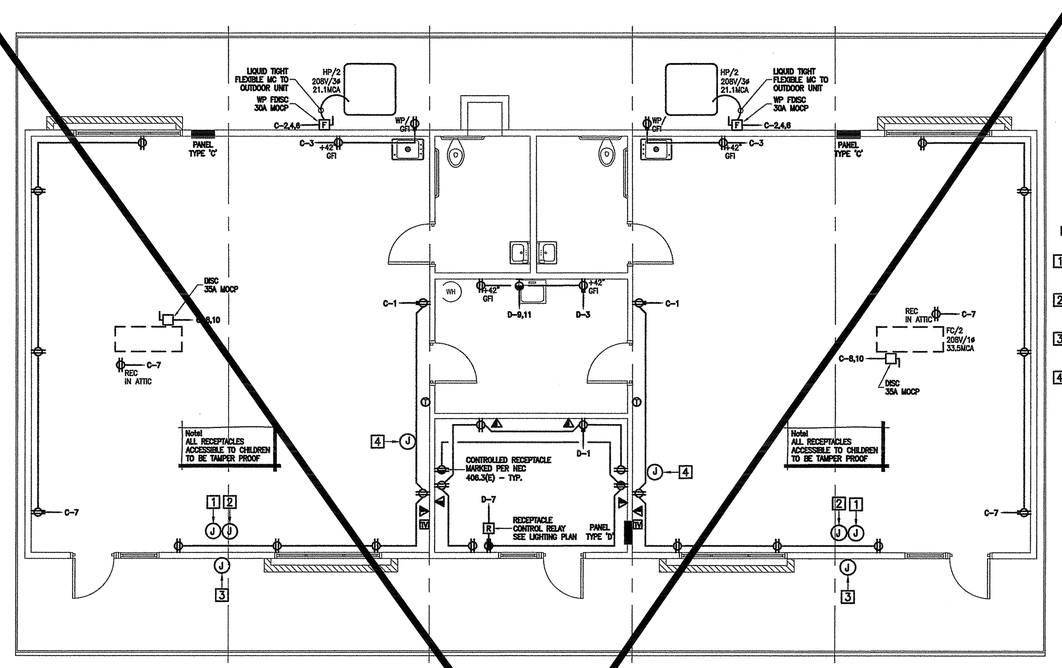

2 SOG 32 - POWER PLAN - 5M (ALTERNATE 'A')
SCALE: 3/16" = 1'-0"

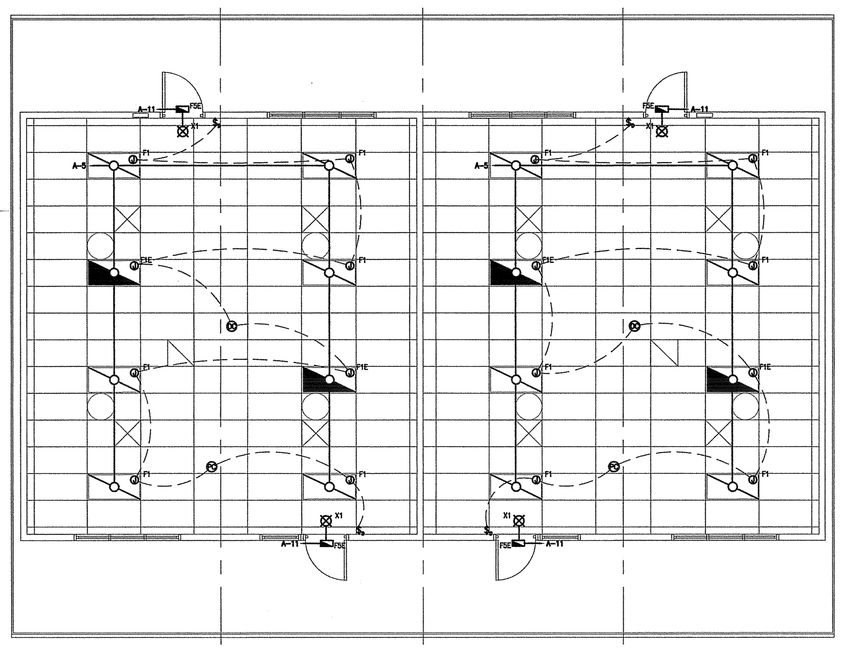

3 SOG 32 - LIGHTING PLAN - 4M
SCALE: 3/16" = 1'-0"

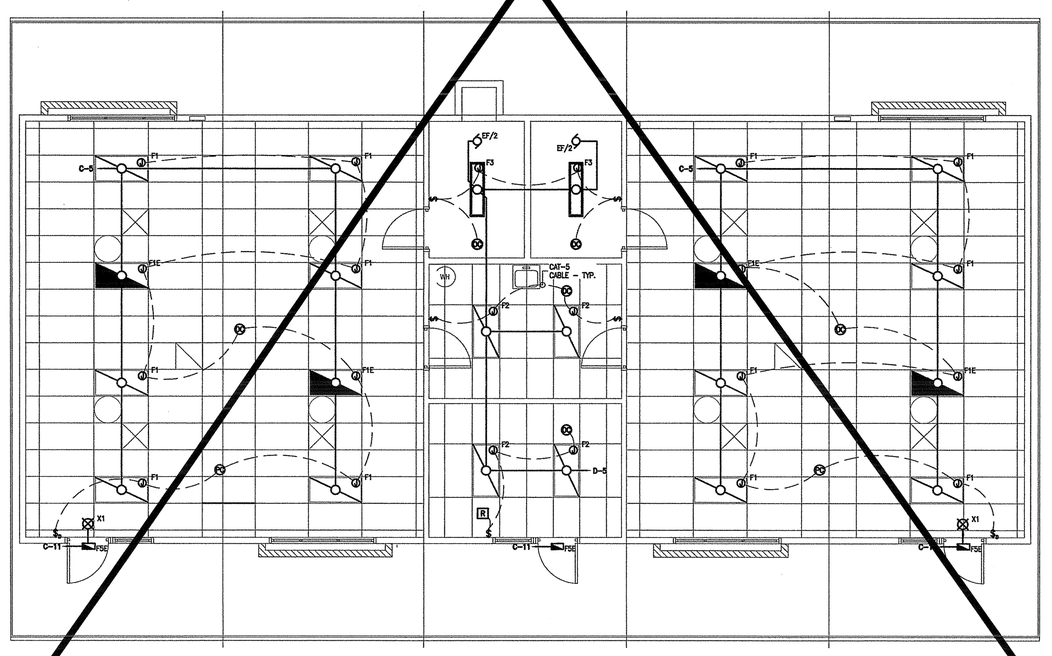

4 SOG 32 - LIGHTING PLAN - 5M
SCALE: 3/16" = 1'-0"

KEYNOTES

1. JUNCTION BOX FOR FIRE ALARM PULL STATION WITH CONDUIT STUBBED TO ATTIC
2. JUNCTION BOX FOR FIRE ALARM VISUAL DEVICE WITH CONDUIT STUBBED TO ATTIC
3. JUNCTION BOX FOR FIRE ALARM EXTERIOR HORN
4. ADD JUNCTION BOX FOR FIRE ALARM PULL STATION

REFER TO E0.01 FOR MOUNTING HEIGHTS.

Note!
LOCATION OF TELECOMMUNICATIONS CABINET DETERMINED IN FIELD. PROVIDE (1)6'x5/8"DIA COPPER CLAD STEEL GROUND ROD w/(1)#6G TO PANEL GROUND - PROVIDE (1) QUAD-PLEX RECEPTACLE IN CABINET TO CKT 3

IDENTIFICATION STAMP
DIV. OF THE STATE ARCHITECT
02 117009
AC FLS SS
DATE 7/23/18

JTS MODULAR
DESIGN • BUILD • TRANSPORT • ENJOY

COMMERCIAL
INSTITUTIONAL
AND
RESIDENTIAL
MODULAR
BUILDINGS
DESIGN &
PLANNING

7001 Mc Divitt Dr.
Bakersfield, CA 93313
Office: (661) 835-9270
Plant: (661) 833-2940
Fax: (661) 847-1007
www.jtsmodular.com

LICENSE #E18218
CANTELMI
ENGINEERING
MECHANICAL & ELECTRICAL
ENGINEERING
1800 21 STREET, SUITE C
BAKERSFIELD, CA 93301
TEL: (661) 324-5252
FAX: (661) 324-8439
Cantelmi@Cantelmi.NET

SOG-32
RE-LOCATABLE
BUILDING PC

APPROVALS
IDENTIFICATION STAMP
DIV. OF THE STATE ARCHITECT
PRE CHECK (PC) DOCUMENT
CODE 2013 CBC
A SEPARATE PROJECT APPLICATION
FOR CONSTRUCTION IS REQUIRED

FILE # PC-JTS
APPL 02-113.899
AC — F/LS SS
DATE 3/19/15

DATE
PROJECT XX-XXX

REGISTERED PROFESSIONAL ENGINEER
KAREN MARTINEZ
NO. E18218
REN 12-31-2015
ELECTRICAL
STATE OF CALIFORNIA
C14200_MEP_REV1
02-18-15
PC

SHEET NAME
ELECTRICAL PLANS:
4M & 5M
(ALTERNATE 'A')

SHEET NUMBER
E1.02

SHEET LEGEND:

SD	ROUGH-IN FOR FIRE ALARM SMOKE DETECTOR IN CEILING
CO	ROUGH-IN FOR FIRE ALARM CARBON MONOXIDE SMOKE DETECTOR IN CEILING
HD	ROUGH-IN FOR FIRE ALARM HEAT DETECTOR IN CEILING
F	NEMA 3R HEAVY DUTY 30A MOCP DISC.

NOTES:

REFER TO E0.01 FOR MOUNTING HEIGHTS

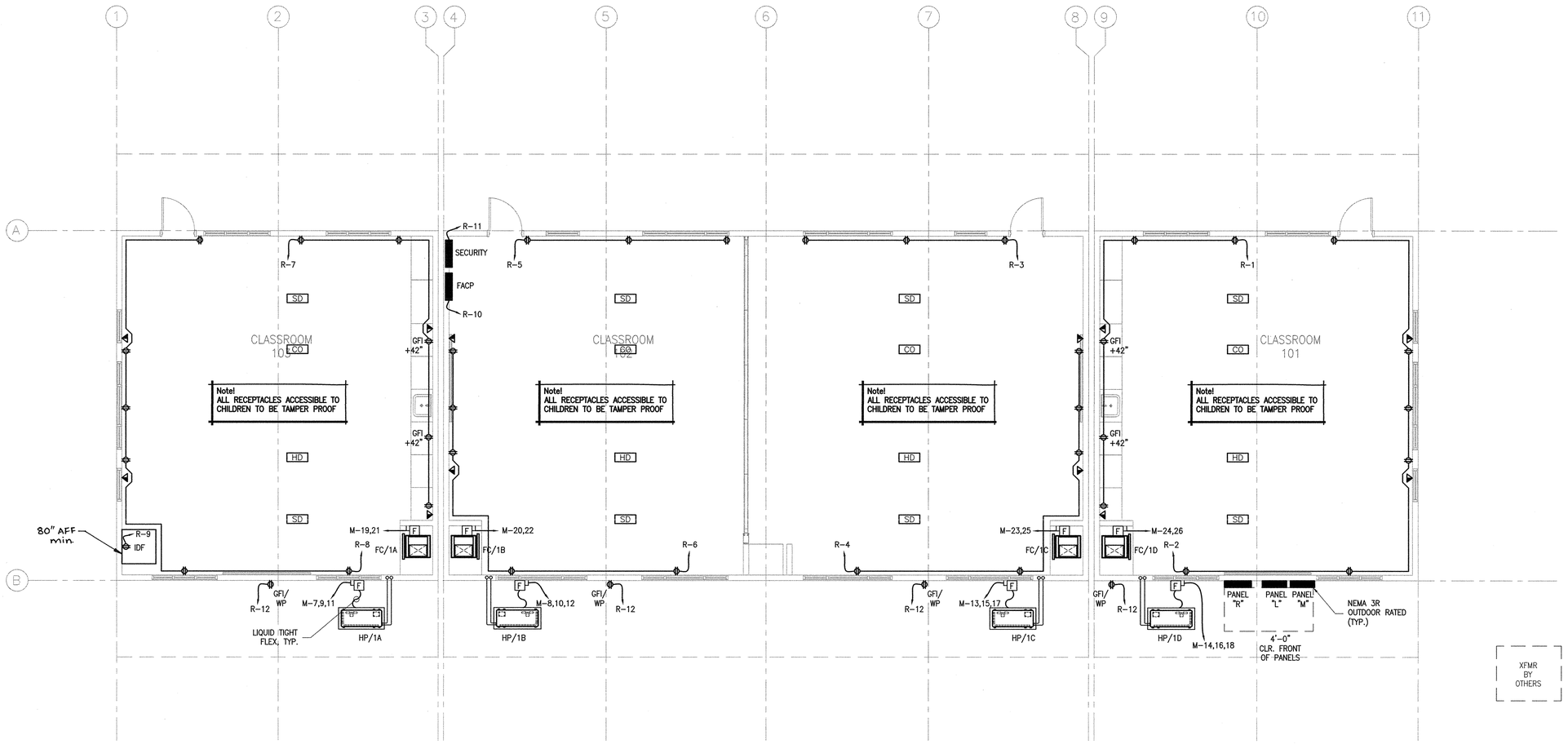

ELECTRICAL POWER PLAN
SCALE: 3/16" = 1'-0"

JTS MODULAR
DESIGN • BUILD • TRANSPORT • ENJOY
7001 MC Divitt DRIVE
BAKERSFIELD, CA 93313
WWW.JTSMODULAR.COM
OFFICE: (661) 835-9270

LICENSE #E18218
CANTELMI ENGINEERING
2130 F STREET
BAKERSFIELD, CA 93301
TEL: (661) 324-5252
FAX: (661) 324-8439
Cantelmi@Cantelmi.NET
7/16/18

REGISTERED PROFESSIONAL ENGINEER KAREN A. MARTINEZ E 18218 ELECTRICAL STATE OF CALIFORNIA

REGISTERED PROFESSIONAL ENGINEER RYAN J. OMER No. S 4437 EXP. 12/31/18 STRUCTURAL STATE OF CALIFORNIA

MONSON - SULTANA ELEMENTARY SCHOOL
CLASSROOM - SLAB ON GRADE PC (02-113899)
10643 AVENUE 416, DINUBA, CA 93618
MONSON - SULTANA JOINT UNION ELEMENTARY SCHOOL DISTRICT

IDENTIFICATION STAMP
DIVISION OF THE STATE ARCHITECT
CODE 2013 CBC

IDENTIFICATION STAMP DIV. OF THE STATE ARCHITECT
02 117009
AC FLS SS
DATE 7/23/18

JTS JOB#: 06-0246
DATE: 7/16/2018

ELECTRICAL POWER PLAN

E-1.05-R

file: S:\DWGS2018\JTS\MONSON SALTANA C18-117\C18-117_ELECT_R3.dwg date: 7/16/2018 2:30 PM

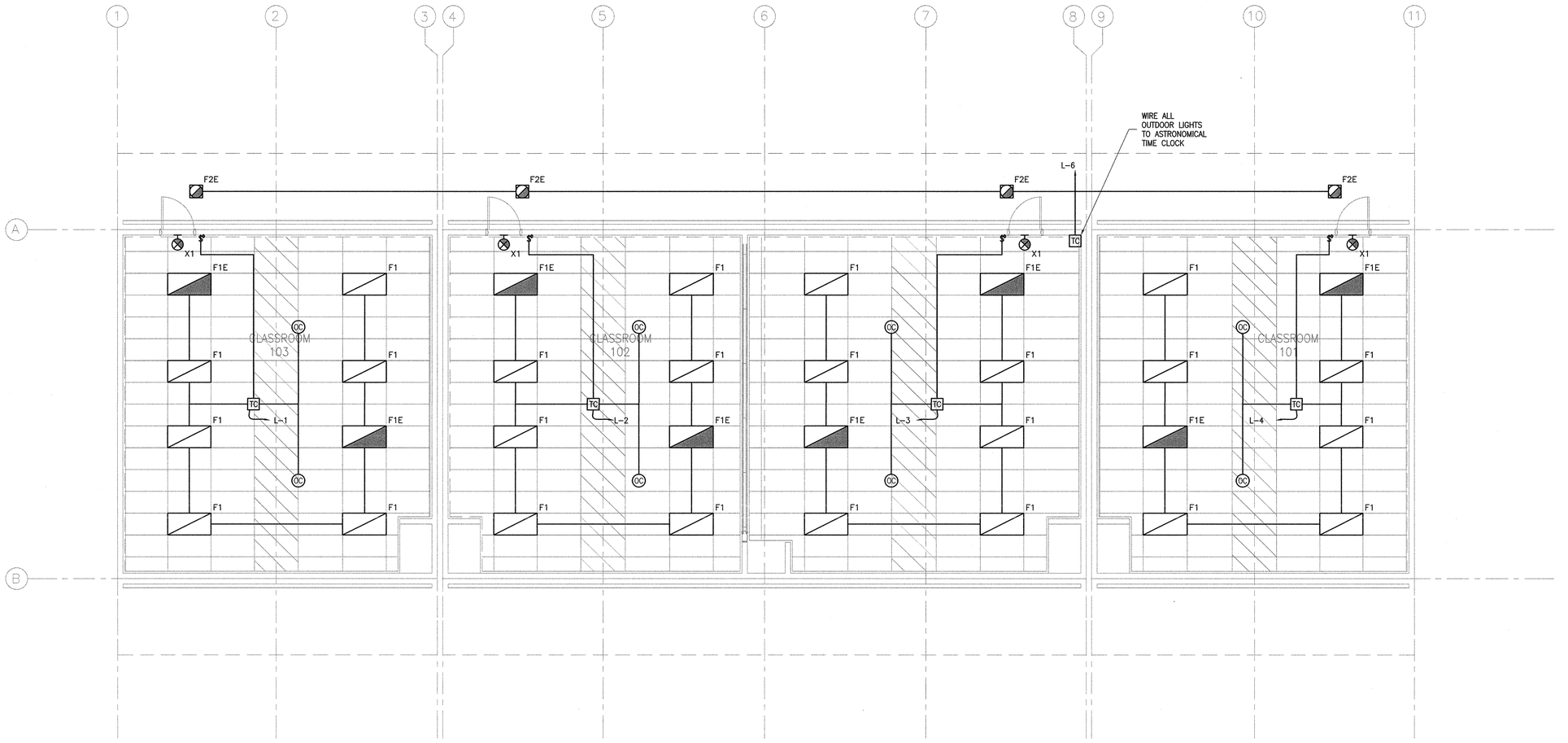

ELECTRICAL LIGHTING PLAN
SCALE: 3/16" = 1'-0"

JTS MODULAR
DESIGN • BUILD • TRANSPORT• ENJOY
7001 MC Divitt DRIVE
BAKERSFIELD, CA 93313
WWW.JTSMODULAR.COM
OFFICE: (661) 835-9270

LICENSE #E18218
CANTELMI ENGINEERING
2130 F STREET
BAKERSFIELD, CA 93301
TEL: (661) 324-5252
FAX: (661) 324-8439
Cantelmi@Cantelmi.NET
7/16/18

REGISTERED PROFESSIONAL ENGINEER KAREN A. MARTINEZ E 18218 ELECTRICAL STATE OF CALIFORNIA

REGISTERED PROFESSIONAL ENGINEER BRIAN J. OLSEN No. S 4439 EXP. 12/31/18 STRUCTURAL STATE OF CALIFORNIA

MONSON - SULTANA ELEMENTARY SCHOOL
CLASSROOM - SLAB ON GRADE PC (02-113899)
10643 AVENUE 416, DINUBA, CA 93618
MONSON - SULTANA JOINT UNION ELEMENTARY SCHOOL DISTRICT

IDENTIFICATION STAMP
DIVISION OF THE STATE ARCHITECT
CODE 2013 CBC

IDENTIFICATION STAMP
DIV. OF THE STATE ARCHITECT
02 117009
AC
DATE 7/25/18

JTS JOB#: 06-0246
DATE: 7/16/2018

ELECTRICAL LIGHTING PLAN

E-1.09-R

file: S:\DWGS2018\JTS\MONSON-SALTANA C18-117\C18-117_ELECT_R3.dwg date: 7/16/2018 2:30 PM

Note!
LOCATION OF TELECOMMUNICATIONS CABINET DETERMINED IN FIELD PROVIDE (1)6'x5/8"DIA COPPER CLAD STEEL GROUND ROD w/(1)#6G TO PANEL GROUND – PROVIDE (1) QUAD-PLEX RECEPTACLE IN CABINET TO CKT 3

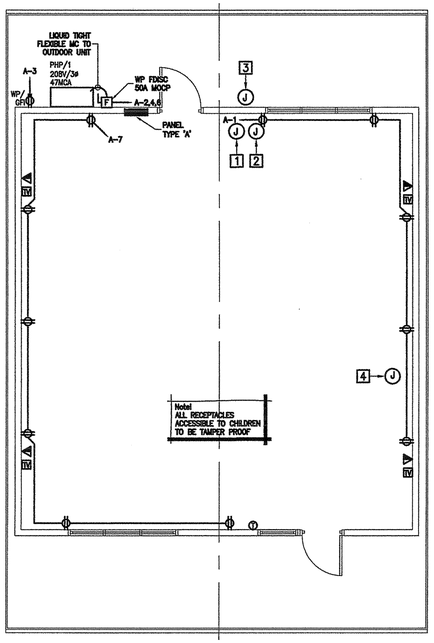

1 SOG 32 - POWER PLAN - 2M (ALTERNATE 'B')
SCALE: 3/16" = 1'-0"

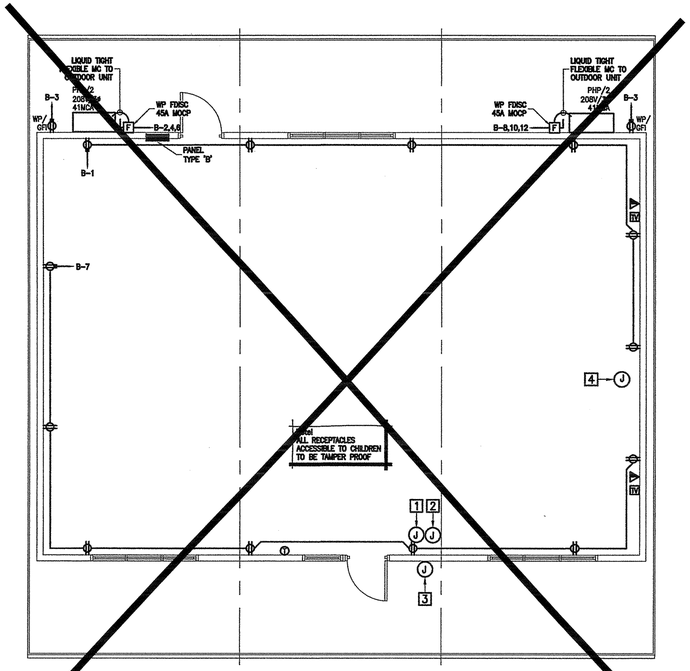

2 SOG 32 - POWER PLAN - 3M (ALTERNATE 'B')
SCALE: 3/16" = 1'-0"

Note!
ALL LIGHTING PLANS FOR ALTERNATE 'B' ARE THE SAME AS IN ALTERNATE 'A'.

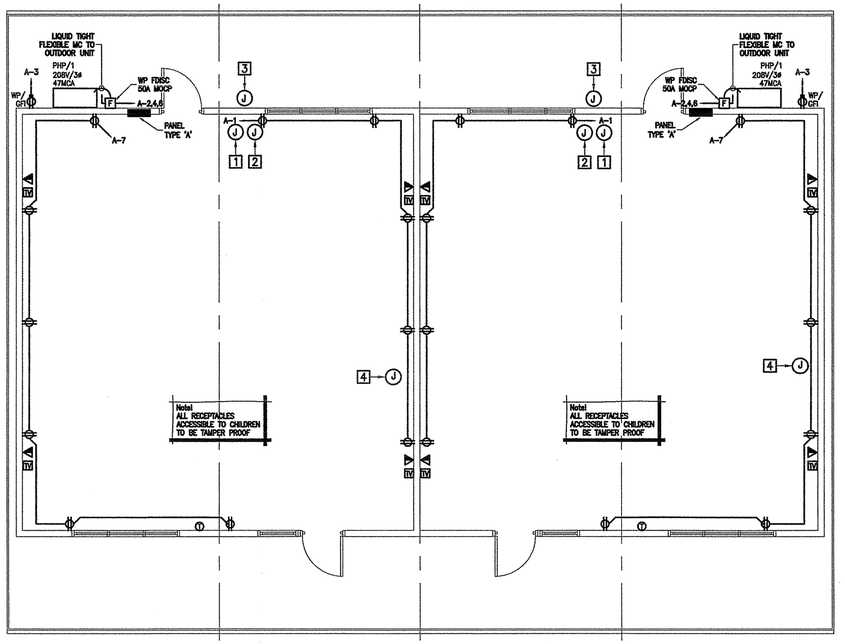

3 SOG 32 - POWER PLAN - 4M (ALTERNATE 'B')
SCALE: 3/16" = 1'-0"

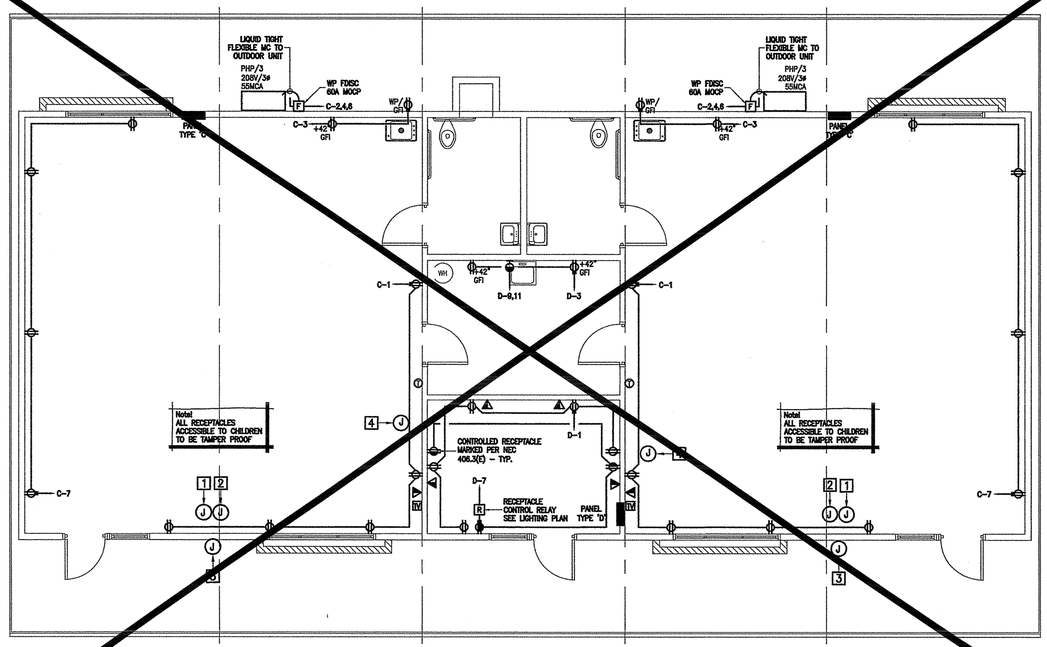

4 SOG 32 - POWER PLAN -5M RESTROOM OPTION (ALTERNATE 'B')
SCALE: 3/16" = 1'-0"

IDENTIFICATION STAMP
DIV. OF THE STATE ARCHITECT
02 117009
AC PLS SS
DATE 7/23/18

JTS MODULAR
DESIGN • BUILD • TRANSPORT • ENJOY

COMMERCIAL INSTITUTIONAL AND RESIDENTIAL MODULAR BUILDINGS DESIGN & PLANNING

7001 Mc Divitt Dr.
Bakersfield, CA 93313
Office: (661) 835-9270
Plant: (661) 833-2940
Fax: (661) 847-1007
www.jtsmodular.com

LICENSE #E18218
CANTELMI ENGINEERING
MECHANICAL & ELECTRICAL ENGINEERING
1800 21 STREET, SUITE C
BAKERSFIELD, CA 93301
TEL: (661) 324-5252
FAX: (661) 324-8439
Cantelmi@Cantelmi.NET

SOG-32
RE-LOCATABLE
BUILDING PC

APPROVALS
IDENTIFICATION STAMP
DIV. OF THE STATE ARCHITECT
PRE CHECK (PC) DOCUMENT
CODE 2013 CBC
A SEPARATE PROJECT APPLICATION FOR CONSTRUCTION IS REQUIRED

FILE # PC - JTS
APPL 02-113899
AC F/LS SS
DATE 3/19/15

DATE
PROJECT XX-XXX

REGISTERED PROFESSIONAL ENGINEER
KARENA MARTINEZ
NO. E18218
REN 12-31-2015
ELECTRICAL
STATE OF CALIFORNIA
C14200 MEP REV1
PC
02-18-15

SHEET NAME
ELECTRICAL PLANS: 2M, 3M, 4M & 5M (ALTERNATE 'B')

SHEET NUMBER
E2.01

System No. W-L-1054

c UL us Classified by Underwriters Laboratories, Inc. to UL 1479 and CAN/ULC-S115

F Ratings - 1 and 2 Hr (See Items 1 and 3)
T Rating - 0 Hr
L Rating At Ambient - Less Than 1 CFM/Sq Ft
L Rating At 400 F - 4 CFM/Sq Ft

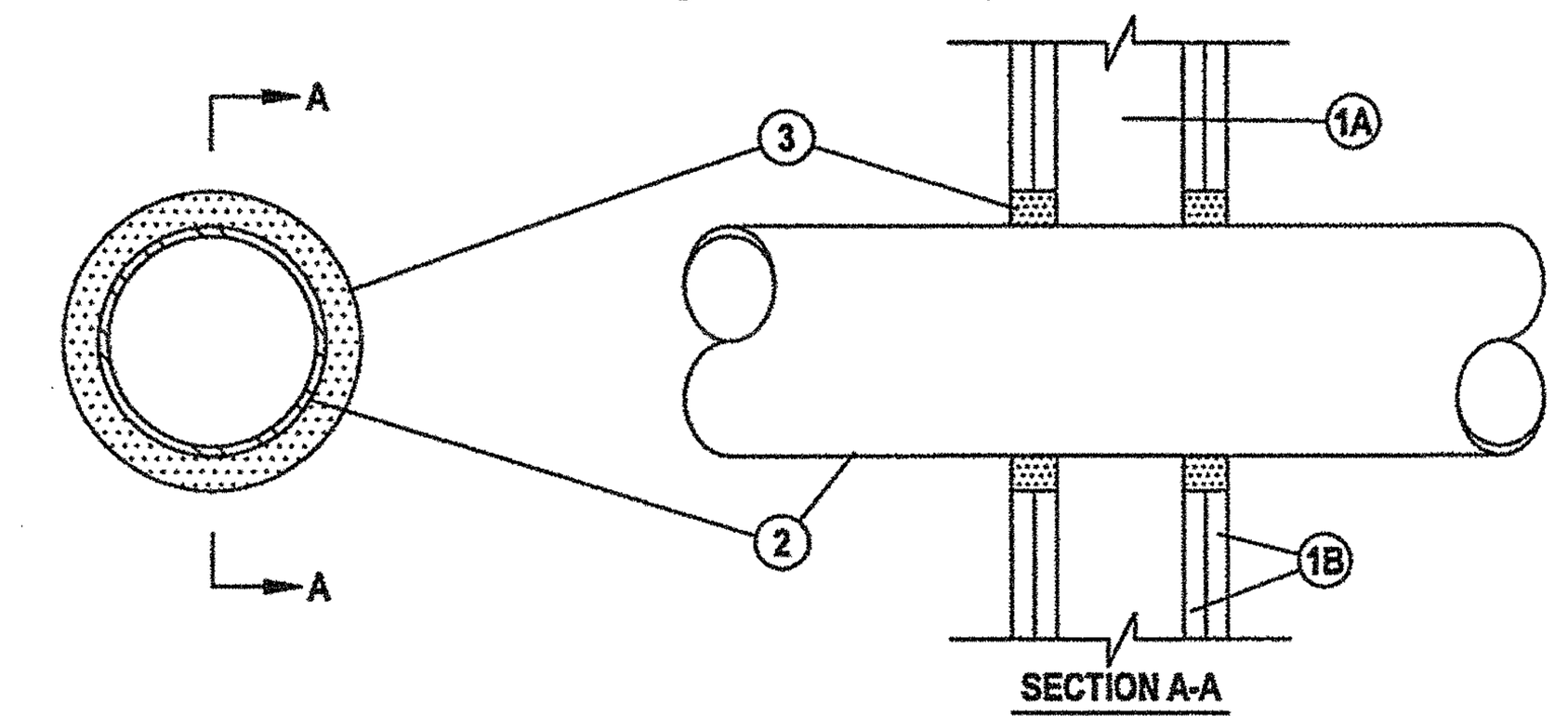

1. Wall Assembly -- The 1 or 2 hr fire-rated gypsum wallboard/stud wall assembly shall be constructed of the materials and in the manner specified in the individual U300 or U400 Series Wall and Partition Designs in the UL Fire Resistance Directory and shall include the following construction features:
A. Studs -- Wall framing may consist of either wood studs or steel channel studs. Wood studs to consist of nom 2 by 4 in. lumber spaced 16 in. OC. Steel studs to be min 2-1/2 in. wide and spaced max 24 in. OC. When steel studs are used and the diam of opening exceeds the width of stud cavity, the opening shall be framed on all sides using lengths of steel stud installed between the vertical studs and screw-attached to the steel studs at each end. The framed opening in the wall shall be 4 to 6 in. wider and 4 to 6 in. higher than the diam of the penetrating item such that, when the penetrating item is installed in the opening, a 2 to 3 in. clearance is present between the penetrating item and the framing on all four sides.
B. Gypsum Board* -- 5/8 in. thick, 4 ft wide with square or tapered edges. The gypsum board type, thickness, number of layers, fastener type and sheet orientation shall be as specified in the individual U300 or U400 Series Design in the UL Fire Resistance Directory. Max diam of opening is 32-1/4 in. for steel stud walls. Max diam of opening is 14-1/2 in. for wood stud walls. The F Rating of the firestop system is equal to the fire rating of the wall assembly.
2. Through-Penetrants -- One metallic pipe, conduit or tubing to be installed either concentrically or eccentrically within the firestop system. The annular space shall be min 0 in. to max 2-1/4 in. Pipe may be installed with continuous point contact. Pipe, conduit or tubing may be installed at an angle not greater than 45 degrees from perpendicular. Pipe, conduit or tubing to be rigidly supported on both sides of wall assembly. The following types and sizes of metallic pipes, conduits or tubing may be used:
A. Steel Pipe -- Nom 30 in diam (or smaller) Schedule 10 (or heavier) steel pipe.
B. Iron Pipe -- Nom 30 in. diam (or smaller) cast or ductile iron pipe.
C. Conduit -- Nom 4 in diam (or smaller) steel electrical metallic tubing or 6 in. diam steel conduit.
D. Copper Tubing -- Nom 6 in. diam (or smaller) Type L (or heavier) copper tubing.
E. Copper Pipe -- Nom 6 in. diam (or smaller) regular (or heavier) copper pipe.
3. Fill, Void or Cavity Material* -- Sealant -- Min 5/8 in. thickness of fill material applied within the annulus, flush with both surfaces of wall. At the point or continuous contact locations between pipe and wall, a min 1/2 in. diam bead of fill material shall be applied at the pipe wall interface on both surfaces of wall .
HILTI CONSTRUCTION CHEMICALS, DIV OF HILTI INC -- FS-One Sealant
*Bearing the UL Classification Mark

Hilti Firestop Systems

Reproduced by HILTI, Inc. Courtesy of Underwriters Laboratories, Inc. December 4, 2002

System No. W-L-2244

UL Classified by Underwriters Laboratories, Inc. to UL 1479

F Ratings -- 1 and 2 Hr (See Item 1)
T Ratings -- 1 and 2 Hr (See Item 1)
L Rating at Ambient - Less Than 1 CFM/sq ft
L Rating at 400 F - 2 CFM/sq ft

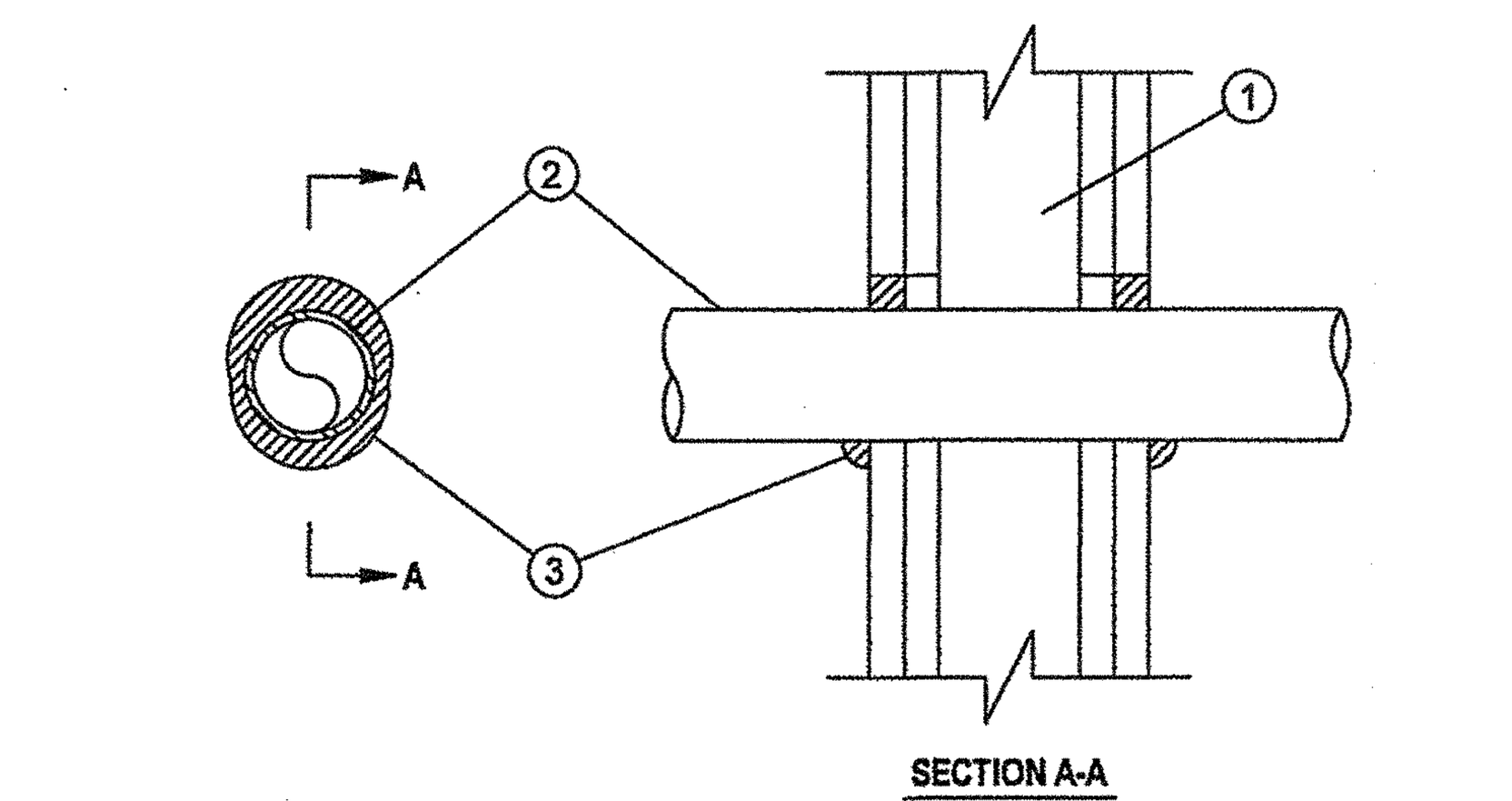

1. Wall Assembly -- The 1 and 2 hr fire rated gypsum board/stud wall assembly shall be constructed of the materials and in the manner described in the individual U300, U400 or V400 Series Wall and Partition Design in the UL Fire Resistance Directory and shall include the following construction features:
A. Studs -- Wall framing shall consist of either wood studs or steel channel studs. Wood studs to consist of nom 2 by 4 in. (51 by 102 mm) lumber spaced 16 in. (406 mm) OC. Steel studs to be min 2-1/2 in. (64 mm) wide by 1-3/8 in. (35 mm) deep channels spaced max 24 in. (610 mm) OC.
B. Gypsum Board* -- The gypsum board type, thickness, number of layers, fastener type and sheet orientation shall be as specified in the individual U300, U400 or V400 Series Design in the UL Fire Resistance Directory. Max diam of opening is 3 in. (76 mm).
The hourly F and T Ratings of the firestop system are equal to the hourly fire rating of the wall assembly in which it is installed.
2. Through Penetrant -- One nonmetallic pipe, conduit or tubing installed either concentrically or eccentrically within the firestop system. The annular space between pipe and periphery of opening shall be min of 0 in. (point contact) to a max 5/8 in. .(16 mm). Pipe to be rigidly supported on both sides of wall assembly. The following types and sizes of nonmetallic pipes may be used:
A. Polyvinyl Chloride (PVC) Pipe -- Nom 2 in. (51 mm) diam (or smaller) cellular or solid core Schedule 40 (or heavier) pipe for use in closed (process or supply) piping systems.
B. Chlorinated Polyvinyl Chloride (CPVC) -- Nom 2 in. (51 mm) diam (or smaller) SDR 13.5 CPVC pipe for use in closed (process or supply) piping systems.
3. Fill, Void or Cavity Material* - Sealant -- Min 5/8 in. (16 mm) thickness of fill material applied within annulus, flush with both surfaces of wall. At point contact location, a min 1/2 in. (13 mm) diam bead of fill material shall be applied to the wall/penetrant interface on both surfaces of the wall.
HILTI CONSTRUCTION CHEMICALS, DIV OF HILTI INC -- FS-ONE Sealant
*Bearing the UL Classification Mark

Hilti Firestop Systems

Reproduced by HILTI, Inc. Courtesy of Underwriters Laboratories, Inc. April 11, 2005

System No. W-L-1408

c UL us Classified by Underwriters Laboratories, Inc. to UL 1479 and CAN/ULC-S115

F Rating - 1 or 2 Hr (See Item 1)
T Rating - 0 or 1/4 Hr (See Item 1)

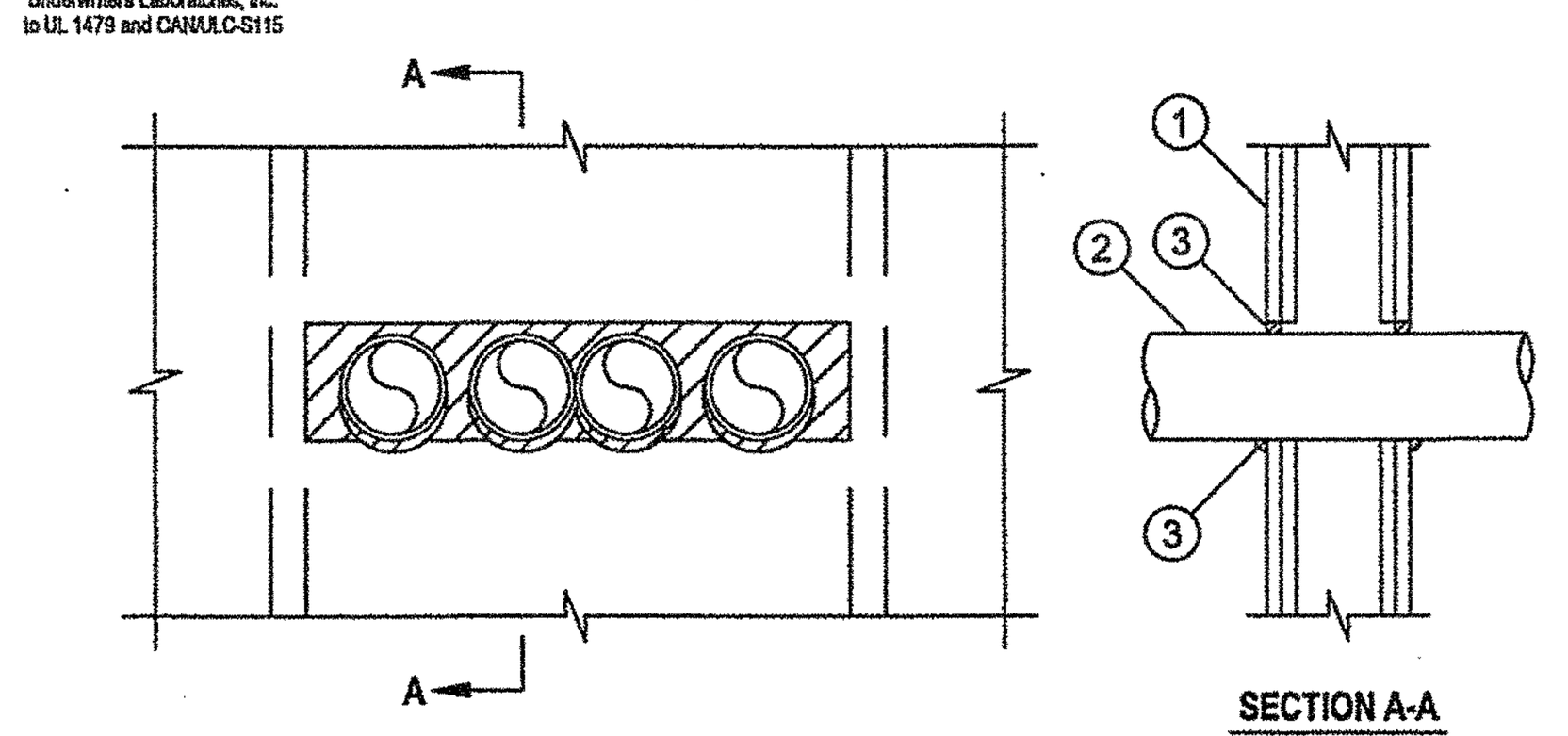

1. Wall Assembly — The 1 and 2 hr fire-rated gypsum board/stud wall assembly shall be constructed of the materials and in the manner described in the individual U400 or V400 Series Wall and Partition Designs in the UL Fire Resistance Directory and shall include the following construction features:
A. Studs — Wall framing shall consist of min 3-5/8 in. (92 mm) wide steel studs spaced max 24 in. (610 mm) OC.
B. Gypsum Board* — Thickness, type, number of layers and fasteners, as specified in the individual U400 or V400 Series Wall and Partition Design. Max area or opening is 114 in.2 (735 cm2) with max height of 5 in. (127 mm) and max width of 23 in. (584 mm).
The hourly F Rating of the firestop system is equal to the hourly rating of the wall. The hourly T Rating of the firestop system is 0 hr and 1/4 hr when installed in 1 hr and 2 hr fire rated wall assemblies, respectively.
2. Through Penetrants — Multiple pipes or conduits installed in single layer array within the firestop system. The annular space between the pipes and conduits and the edges of the opening shall be min 0 in. (0 mm, point contact) to max 1 in. (25 mm). The separation between pipes and conduits to be a min 0 in. (0 mm, point contact) to a max 1-1/2 in. (38 mm). Pipes and conduits to be rigidly supported on both sides of wall assembly. The following types and sizes of metallic pipes or conduits may be used:
A. Steel Pipe — Nom 4 in. (102 mm) diam (or smaller) Schedule 5 (or heavier) steel pipe.
B. Conduit — Nom 4 in. (102 mm) diam (or smaller) rigid steel conduit or steel electrical metallic tubing (EMT).
3. Fill Void or Cavity Materials* - Sealant — Min 5/8 in. (16 mm) thickness of fill material installed to completely fill annular space between pipes, conduits and gypsum flush with each surface of wall. Min 1/2 in. (13 mm) diam bead of fill material applied to the through penetrant/wall interface at the point contact locations on both sides of the wall.
HILTI CONSTRUCTION CHEMICALS, DIV OF HILTI INC — FS-ONE Sealant
*Bearing the UL Classification Mark

Hilti Firestop Systems

Reproduced by HILTI, Inc. Courtesy of Underwriters Laboratories, Inc. September 05, 2006

System No. W-L-3065

c UL us Classified by Underwriters Laboratories, Inc. to UL 1479 and CAN/ULC-S115

F Ratings — 1 and 2 Hr (See Item 1)
T Rating — 0 and ¾ Hr (See Item 3)

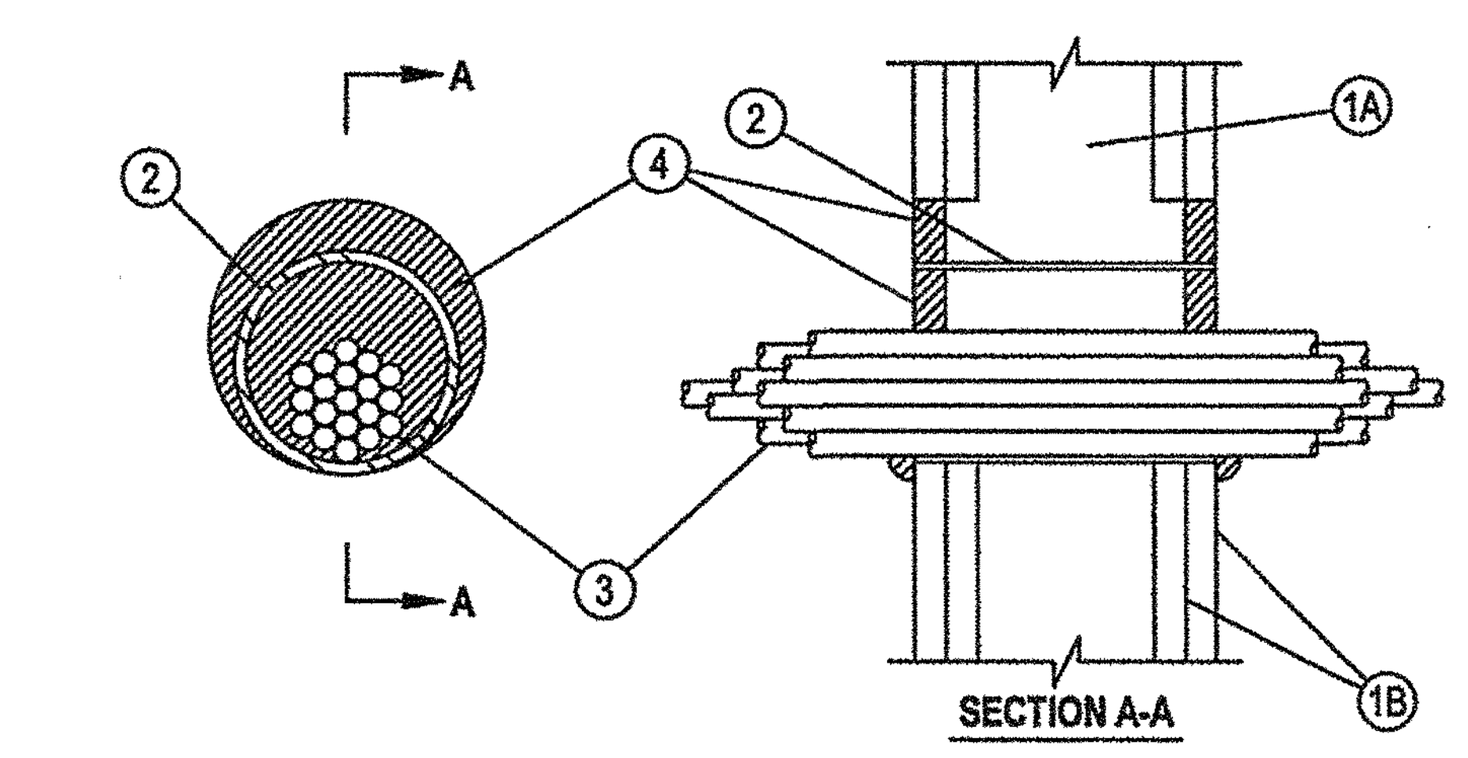

1. Wall Assembly — The 1 or 2 fire-rated gypsum wallboard/stud wall assembly shall be constructed of the materials and in the manner specified in the individual U300, U400 or V400 Series Wall and Partition Designs in the UL Fire Resistance Directory and shall include the following construction features:
A. Studs — Wall framing may consist of either wood studs or steel channel studs. Wood studs to consist of nom 2 by 4 in. (51 by 102 mm) lumber spaced 16 in. (406 mm) OC. Steel studs to be min 2-1/2 in. (64 mm) wide and spaced max 24 in. (610 mm) OC.
B. Gypsum Board* — Nom 5/8 in. (16 mm) thick gypsum board, with square or tapered edges. The gypsum board type, thickness, number of layers, fastener type and sheet orientation shall be as specified in the individual U300, U400 or V400 Series Design in the UL Fire Resistance Directory. Max diam of opening is 5-1/2 in. (138 mm) when sleeve (Item 2) is employed. Max diam of opening is 4 in. (102 mm) when sleeve (Item 2) is not employed. The F Rating of the firestop system is equal to the fire rating of the wall assembly.
2. Metallic Sleeve — (Optional) - Nom 4 in. (102 mm) diam (or smaller) steel electrical metallic tubing (EMT) or Schedule 5 (or heavier) steel pipe or min 0.016 in. thick (0.41 mm, No. 28 ga) galv steel sleeve installed flush with wall surfaces. The annular space between steel sleeve and periphery of opening shall be min 0 in. (0 mm, point contact) to max 1 in. (25mm). When Schedule 5 steel pipe or EMT is used, sleeve may extend up to 18 in. (457 mm) beyond the wall surfaces. As an option when Schedule 5 steel pipe or EMT is used, sleeve may extend continuously beyond one wall surfaces. When cable bundle penetrates wall assembly at an angle of 45 degrees, no metallic sleeve is used.
3. Cables — Aggregate cross-sectional area of cable in opening to be max 45 percent of the cross-sectional area of the opening. The annular space between the cable bundle and the periphery of the opening to be min 0 in. (0 mm, point contact) to max 1 in. (25 mm) Cables to be rigidly supported on both sides of the wall assembly. Cable bundle, using cables described below, may penetrate the wall at an angle not greater than 45 degrees. Any combination of the following types and sizes of copper conductor cables may be used:
A. Max 7/C No. 12 AWG with polyvinyl chloride (PVC) insulation and jacket.
B. Max 25 pair No. 24 AWG telephone cable with PVC insulation and jacket.
B1. Max 4 pr No. 22 AWG Cat 5 or Cat 6 computer cables.
C. Type RG/U coaxial cable with polyethylene (PE) insulation and PVC jacket having a max outside diameter of ½ in. (13 mm).
C1. Max RG 6/U coaxial cable with fluorinated ethylene insulation and jacketing.
D. Multiple fiber optical communication cable jacketed with PVC and having a max OD of 5/8 in. (16 mm).
E. Through Penetrating Products*— Max three copper conductor No. 8 AWG .Metal-Clad Cable+.
AFC CABLE SYSTEMS INC
F. Max 3/C (with ground)(or smaller) No. 8 AWG copper conductor cable with PVC insulation and jacketing.
G. Max 3/4 in. (19 mm) diam copper ground cable with or without a PVC jacket.
H. Fire Resistive Cables* - Max 1-1/4 in. (32 mm) diam single conductor or multi conductor Type MI cable. A min 1/8 in. (3 mm) separation shall be maintained between MI cables and any other types of cable.
I. Max 4/C with ground 300 kcmil (or smaller) aluminum SER cable with PVC insulation and jacket.
J. Through Penetrating Product* - Any cables, Metal-Clad Cable+ or Armored Cable+ currently Classified under the Through Penetrating Products category.
K. Maximum 3/C No. 8 AWG metal-clad cable.
L. Maximum 5/8 diam fiber-optic cable with PVC jacket.
For cable bundle penetrating the wall assembly at an angle of 45 degrees, the T rating is ¾ hr for a 2 hr wall assembly.
See Through Penetrating Product (XHLY) category in the Fire Resistance Directory for names of manufacturers.
4. Fill, Void or Cavity Material*— Sealant or Putty — Fill material applied within the annulus, flush with each end of the steel sleeve or wall surface. Fill material installed symmetrically on both sides of the wall. A min 5/8 in. (16 mm) thickness of sealant is required for the 1 or 2 hr F Rating . An additional 1/2 in. (13 mm) diam bead of fill material shall be applied around the perimeter of sleeve on both sides of the wall when sleeve extends beyond surface of wall.
HILTI CONSTRUCTION CHEMICALS, DIV OF HILTI INC — CP601S, CP606, FS-One Sealants or CP618 Putty
*Bearing the UL Classification Mark
+Bearing the UL Listing Mark

Hilti Firestop Systems

Reproduced by HILTI, Inc. Courtesy of Underwriters Laboratories, Inc. March 15, 2012

LIGHT FIXTURE SCHEDULE

VOLTAGE: 120V (U.O.N.)

TYPE	INPUT WATTS	DESCRIPTION AND MANUFACTURER	REMARKS
F1	77	2x4 LED TROFFER #12 ACRYLIC .125" THICK LENS (OR EQUAL) VOLTAGE: 277v LAMP: LED – 7200 LUMENS MANUFACTURER: LITHONIA 2GTL-4-72L-LP840-N80	*F1E DESIGNATES EMERGENCY BALLAST FIXTURE EL14L W/ 90 MIN. BATTERY BACK-UP – –
F2	39	2x4 LED TROFFER #12 ACRYLIC .125" THICK LENS (OR EQUAL) VOLTAGE: 277v LAMP: LED – 4000 LUMENS MANUFACTURER: LITHONIA 2GTL-4-40L-LP840-N80	*F2E DESIGNATES EMERGENCY BALLAST FIXTURE EL14L W/ 90 MIN. BATTERY BACK-UP – –
F3	50	1x4 WRAPAROUND (OR EQUAL) PATTERNED #12 ACRYLIC VOLTAGE: 120-277 LAMP: LED – 4000 LUMENS MANUFACTURER: LITHONIA #LBL-4-LP840	*F4E DESIGNATES EMERGENCY BALLAST FIXTURE W/ 90 MIN. BATTERY BACK-UP – –
F4	26	1x2 WRAPAROUND (OR EQUAL) PATTERNED #12 ACRYLIC VOLTAGE: 120-277 LAMP: LED 2000 LUMENS MANUFACTURER: LITHONIA #LBL-2-LP840	*F5E DESIGNATES EMERGENCY BALLAST FIXTURE W/ 90 MIN. BATTERY BACK-UP – –
F5	16.6	OUTDOOR LED CAST FLUSH MOUNT (OR EQUAL) UL LISTED FOR WET LOCATION VOLTAGE: 120v LAMP: 16.6w LED MANUFACTURER: LITHONIA #OLCFM	*F6E DESIGNATES EMERGENCY BALLAST FIXTURE W/ 90 MIN. BATTERY BACK-UP – –
X1	3.8	LED EXIT/BUG EYE UNIT COMBO – VOLTAGE: MULTI-VOLT LAMP: (2) 1.8W LED MANUFACTURER: LITHONIA- ECR LED M6	– – – – –

* ALL EXTERIOR LIGHT FIXTURES SHALL BE DARK SKY COMPLIANT AND SHALL NOT EXCEED BUG RATING REQUIREMENTS AS SHOWN IN TABLE 5.106.8 OF THE CALIFORNIA ENERGY CODE.

LIGHTING CONTROLS SCHEDULE

SYMBOL	DESCRIPTION AND MANUFACTURER	SYMBOL	
OC	OCCUPANCY SENSOR CEILING MOUNT – 360° SENSING ANGLE – COMMUNICATION: JR-45 "CAT-5 DAISY-CHAIN BUS" MANUFACTURER: nLIGHT #PDT-10	BR	nLIGHT DAISY-CHAIN BRIDGE WHERE REQUIRED, COORDINATE w/MANUFACTURER MOUNT CONCEALED ABOVE CEILING COMMUNICATION: JR-45 "CAT-5 BUS" MANUFACTURER: nLIGHT #PDT-10
PC	DAYLIGHT SENSOR CEILING MOUNT IN DAYLIGHT AREA – COMMUNICATION: JR-45 "CAT-5 DAISY-CHAIN BUS" MANUFACTURER: nLIGHT #nCM-ADC	G	CONTROL INTERFACE AND GATEWAY w/TIME SCHEDULING ONE PER BUILDING – WALL MOUNT – COMMUNICATION: JR-45 "CAT-5 DAISY-CHAIN BUS" MANUFACTURER: nLIGHT #GWT2 KIT
$_D	DIGITAL FOUR SCENE LIGHT SWITCH COLOR TO MATCH WALL FINISH – WH=WHITE, IV=IVORY, AL=LIGHT ALMOND, GR=GREY, BK=BLACK COMMUNICATION: JR-45 "CAT-5 DAISY-CHAIN BUS" MANUFACTURER: nLIGHT #nPODM-4P-DX-WH	R	CONTROLLED RELAY FOR CONTROLLED RECEPTACLES FOR CONTROLLED RECEPTACLES IN OFFICE AREAS MOUNT CONCEALED ABOVE CEILING – 16A MAX COMMUNICATION: JR-45 "CAT-5 BUS" MANUFACTURER: nLIGHT #nSP16
$	DIGITAL LIGHT SWITCH ON/OFF ONLY COLOR TO MATCH WALL FINISH – WH=WHITE, IV=IVORY, AL=LIGHT ALMOND, GR=GREY, BK=BLACK COMMUNICATION: JR-45 "CAT-5 DAISY-CHAIN BUS" MANUFACTURER: nLIGHT #nPODM		

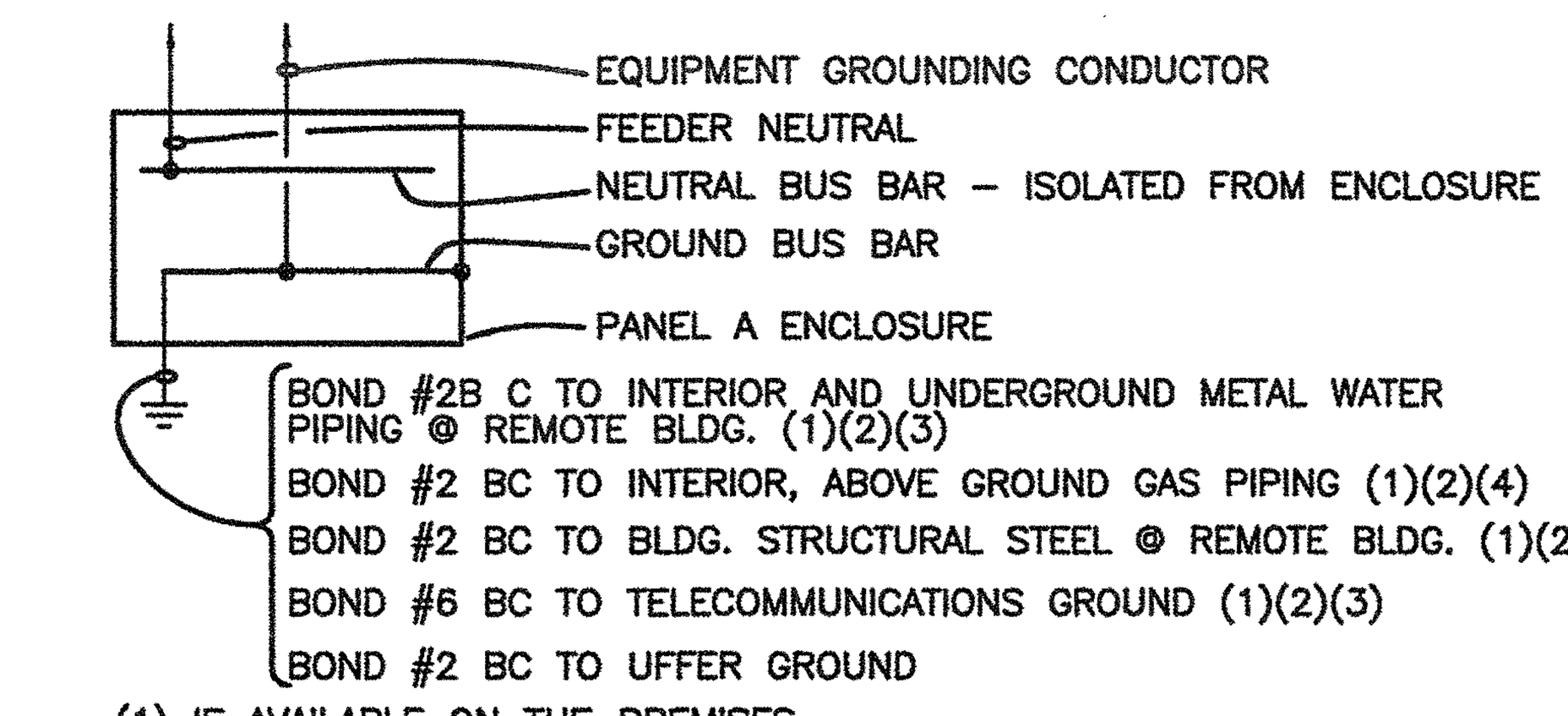

(1) IF AVAILABLE ON THE PREMISES
(2) BOND PER N.E.C., ARTICLE 250-50
(3) CONDUCTOR SIZED PER N.E.C., TABLE 250-66
(4) CONDUCTOR SIZED PER N.E.C., TABLE 250-122

6 NEUTRAL GROUND BOND

NTS

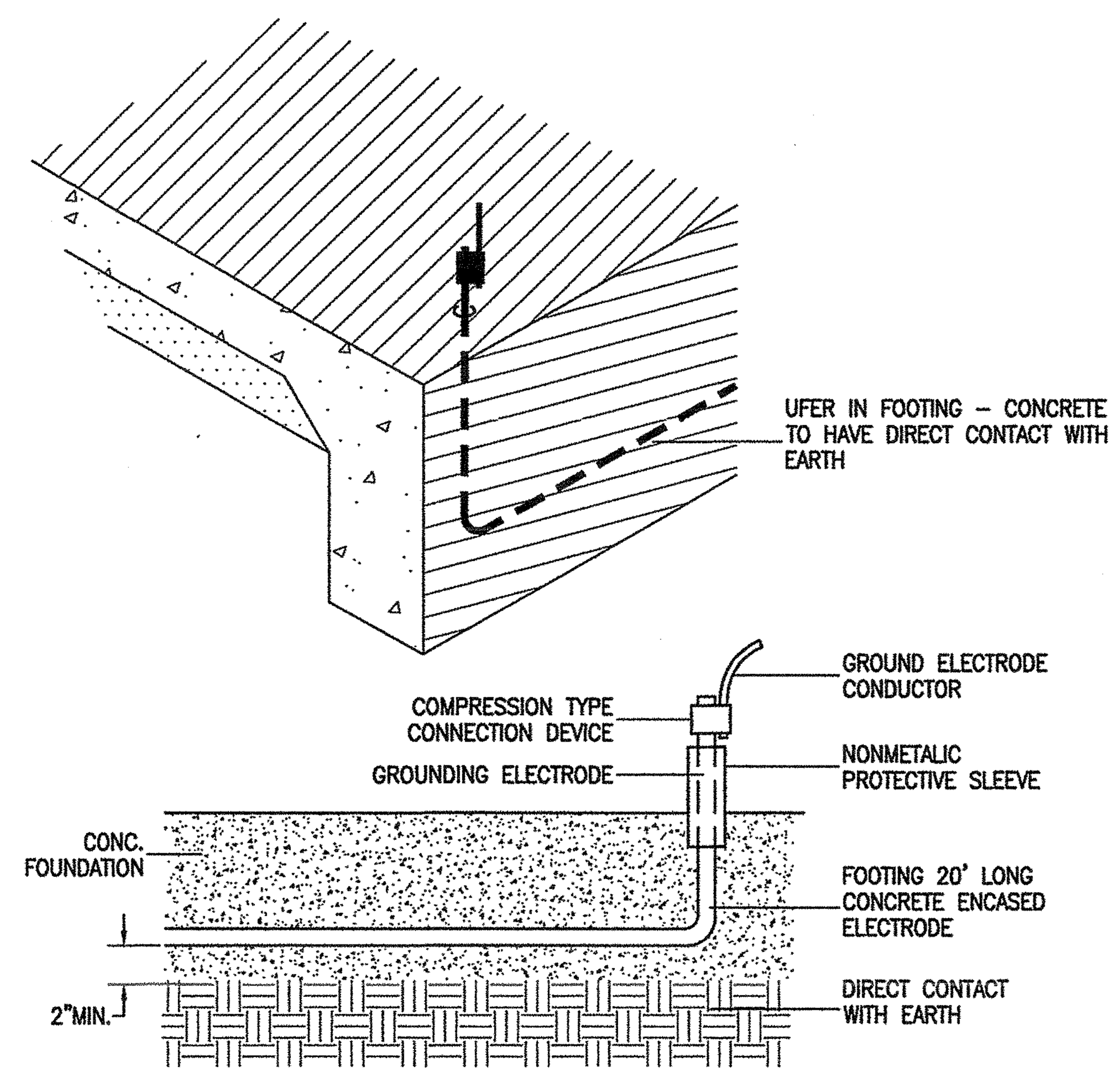

7 UFER GROUND

NTS

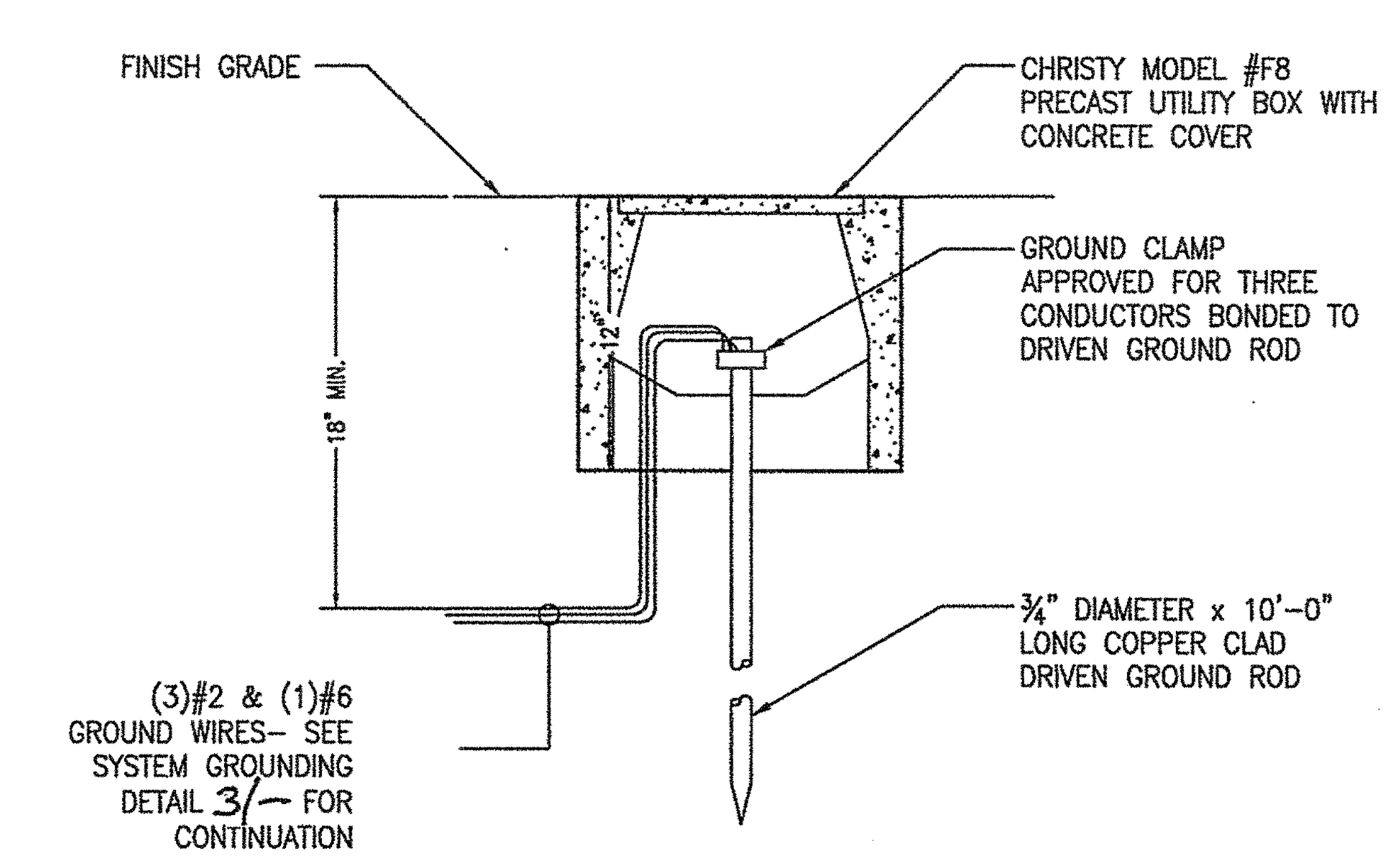

1 GROUND WELL

NTS

THE GROUNDING ELECTRODE SYSTEM SHALL BE TESTED BY THE FALL OF POTENTIAL METHOD AS SPECIFIED IN IEEE STANDARD 81-1983 AND SHOWN TO BE 25 OHMS OR LESS. A COPY OF THE TEST REPORT, SIGNED BY THE PROJECT INSPECTOR WHO WITNESSED THE TEST, SHALL BE SUBMITTED TO THE ARCHITECT AND ELECTRICAL ENGINEER.

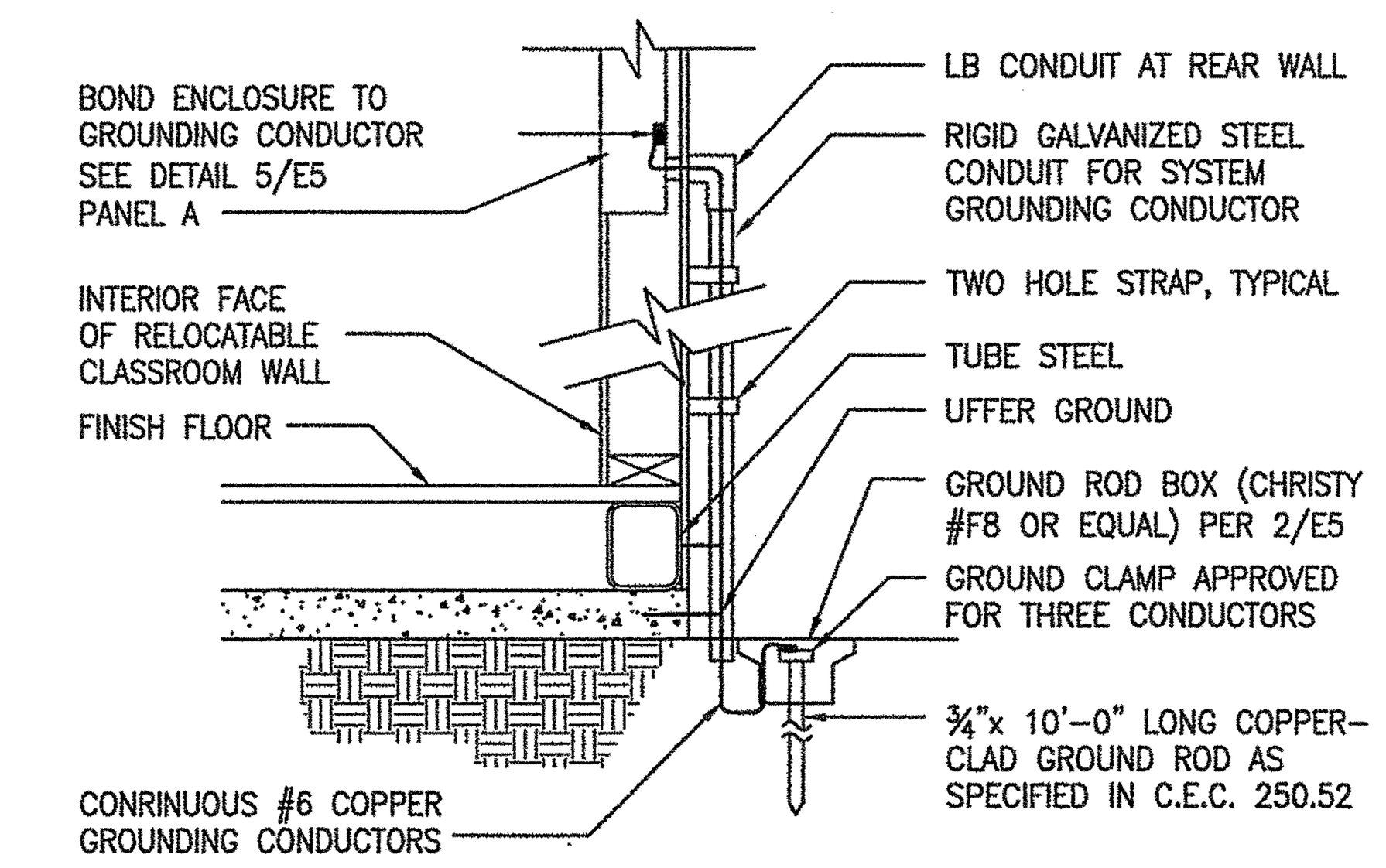

BOND CLASSROOM BUILDINGS TOGETHER WITH (1)#4 CU CONDUCTOR WHERE RELOCATABLES OCCUR SIDE-BY-SIDE

SITE INSPECTOR IS TO WITNESS AND VERIFY GROUNDING TESTS

3 SYSTEM GROUND DETAIL

NTS

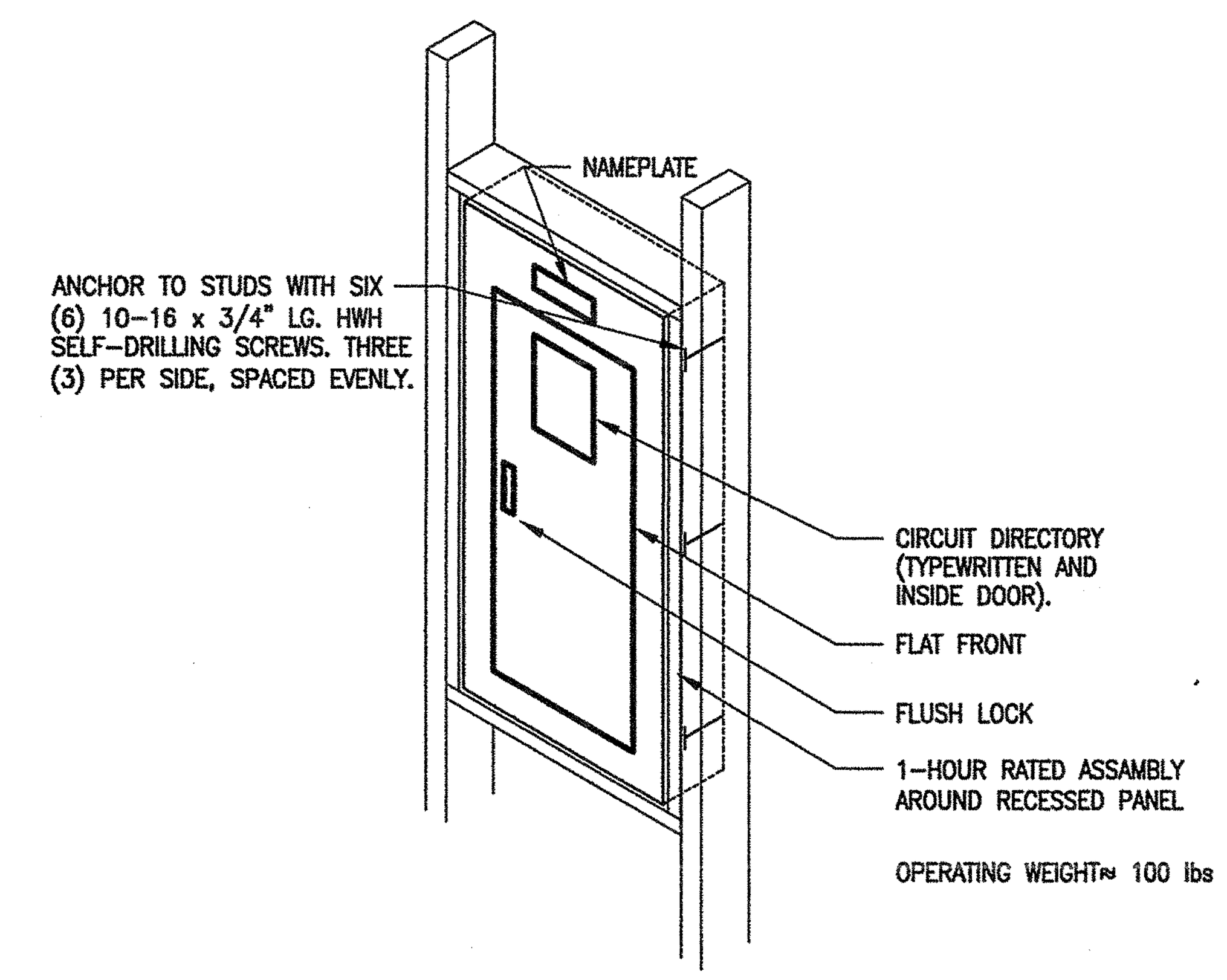

4 PANEL MTG - FLUSH

NTS

FILE PC - JTS

IDENTIFICATION STAMP
DIVISION OF THE STATE ARCHITECT
PRE CHECK (PC) DOCUMENT
CODE 2013 CBC
A SEPARATE PROJECT APPLICATION FOR CONSTRUCTION IS REQUIRED

IDENTIFICATION STAMP
DIVISION OF THE STATE ARCHITECT
APPL. NO.: 02-117009
AC ___ FLS ___ SS ___
DATE 7/23/18

JTS MODULAR
DESIGN • BUILD • TRANSPORT • ENJOY

COMMERCIAL INSTITUTIONAL AND RESIDENTIAL MODULAR BUILDINGS DESIGN & PLANNING

7001 Mc Divitt Dr.
Bakersfield, CA 93313
Office: (661) 835-9270
Plant: (661) 833-2940
Fax: (661) 847-1007
www.jtsmodular.com

LICENSE #E18218

CANTELMI ENGINEERING
MECHANICAL & ELECTRICAL ENGINEERING
1800 21 STREET, SUITE C
BAKERSFIELD, CA 93301
TEL: (661) 324-5252
FAX: (661) 324-8439
Cantelmi@Cantelmi.NET

SOG-32 RE-LOCATABLE BUILDING PC

APPROVALS

IDENTIFICATION STAMP
DIV. OF THE STATE ARCHITECT
PRE CHECK (PC) DOCUMENT
CODE 2013 CBC
A SEPARATE PROJECT APPLICATION FOR CONSTRUCTION IS REQUIRED

FILE # PC-JTS
APPL 02-113899
AC ___ F/LS ___ SS ___
DATE 3/19/15

DATE ________

PROJECT XX-XXX

REGISTERED PROFESSIONAL ENGINEER KAREN A. MARTINEZ NO.E18218 REN 12-31-2015 ELECTRICAL STATE OF CALIFORNIA

C14200_MEP_REV1

02-18-15 PC

SHEET NAME

ELECTRICAL LIGHTING SCHEDULE & DETAILS

SHEET NUMBER

E5.03

PANEL "M"

SERVICE: 120/208V 3φ 4W | MAIN BKR.: 300A | BUS: 400A | LOC.: SEE PLAN
PANELBOARD | MTG.: WALL

REMARKS	ΦA	ΦB	ΦC	REC	LTG	MISC	TRIP	POLE	WIRE	CIRC	CIRC	WIRE	POLE	TRIP	REC	LTG	MISC	ΦA	ΦB	ΦC	REMARKS
PANEL "L"	1600						100		2	1	2	2		100				4400			PANEL "R"
↓		1600							2	3	4	2							2000		↓
↓			200					3	2	5	6	2	3							2600	↓
HP/1A	2231						30		8	7	8	8		30				2231			HP/1B
↓		2231							8	9	10	8							2231		↓
↓			2231					3	8	11	12	8	3							2231	↓
HP/1C	2231						30		8	13	14	8		30				2231			HP/1D
↓		2231							8	15	16	8							2231		↓
↓			2231					3	8	17	18	8	3							2231	↓
FC/1A	3484						35		8	19	20	8		35				3484			FC/1B
↓		3484						2	8	21	22	8	2						3484		↓
FC/1C			3484				35		8	23	24	8		35						3484	FC/1D
↓	3484							2	8	25	26	8	2					3484			↓
SPARE							20	1	12	27	28	12	1	20							SPARE
SPARE							20	1	12	29	30	12	1	20							SPARE
SPARE							20	1	12	31	32	12	1	20							SPARE
SPARE							20	1	12	33	34	12	1	20							SPARE
SPARE							20	1	12	35	36	12	1	20							SPARE
SPARE							20	1	12	37	38	12	1	20							SPARE
SPARE							20	1	12	39	40	12	1	20							SPARE
SPARE							20	1	12	41	42	12	1	20							SPARE
CONNECTED LOADS=	13030	9546	8146															15830	9946	10546	CONNECTED LOADS=

TOTAL WATTS= 67044 | ΦA= 28860 | ΦB= 19492 | ΦC= 18692
AMPS= 186.1 | MINIMUM BKR | A.I.C. RATING= SERIES
DEMAND FACTOR 125% 232.62

PHASE A = 28860
PHASE B = 19492
PHASE C = 18692
TOTAL WATTS 67044

PANEL "L"

SERVICE: 120/208V 3φ 4W | MAIN BKR.: 100A | BUS: 100A | LOC.: SEE PLAN
PANELBOARD | MTG.: WALL

REMARKS	ΦA	ΦB	ΦC	REC	LTG	MISC	TRIP	POLE	WIRE	CIRC	CIRC	WIRE	POLE	TRIP	REC	LTG	MISC	ΦA	ΦB	ΦC	REMARKS
LIGHTS	800						20	1	12	1	2	12	1	20				800			LIGHTS
LIGHTS		800					20	1	12	3	4	12	1	20					800		LIGHTS
EMERGENCY LIGHTS			50				20	1	12	5	6	12	1	20						150	OUTDOOR LIGHTS
SPARE							20	1	12	7	8	12	1	20							SPARE
SPARE							20	1	12	9	10	12	1	20							SPARE
SPARE							20	1	12	11	12	12	1	20							SPARE
SPARE							20	1	12	13	14	12	1	20							SPARE
SPARE							20	1	12	15	16	12	1	20							SPARE
SPARE							20	1	12	17	18	12	1	20							SPARE
SPARE							20	1	12	19	20	12	1	20							SPARE
SPARE							20	1	12	21	22	12	1	20							SPARE
SPARE							20	1	12	23	24	12	1	20							SPARE
SPARE							20	1	12	25	26	12	1	20							SPARE
SPARE							20	1	12	27	28	12	1	20							SPARE
SPARE							20	1	12	29	30	12	1	20							SPARE
SPARE							20	1	12	31	32	12	1	20							SPARE
SPARE							20	1	12	33	34	12	1	20							SPARE
SPARE							20	1	12	35	36	12	1	20							SPARE
SPARE							20	1	12	37	38	12	1	20							SPARE
SPARE							20	1	12	39	40	12	1	20							SPARE
SPARE							20	1	12	41	42	12	1	20							SPARE
CONNECTED LOADS=	800	800	50															800	800	150	CONNECTED LOADS=

TOTAL WATTS= 3400 | ΦA= 1600 | ΦB= 1600 | ΦC= 200
AMPS= 9.4375 | MINIMUM BKR | A.I.C. RATING= SERIES
DEMAND FACTOR 125% 11.797

PHASE A = 1600
PHASE B = 1600
PHASE C = 200
TOTAL WATTS 3400

PANEL "R"

SERVICE: 120/208V 3φ 4W | MAIN BKR.: 100A | BUS: 100A | LOC.: SEE PLAN
PANELBOARD | MTG.: WALL

REMARKS	ΦA	ΦB	ΦC	REC	LTG	MISC	TRIP	POLE	WIRE	CIRC	CIRC	WIRE	POLE	TRIP	REC	LTG	MISC	ΦA	ΦB	ΦC	REMARKS
REC	1000						20	1	12	1	2	12	1	20				1200			REC
REC		600					20	1	12	3	4	12	1	20					1000		REC
REC			600				20	1	12	5	6	12	1	20						1000	REC
REC	1000						20	1	12	7	8	12	1	20				1200			REC
IDF		200					20	1	12	9	10	12	1	20					200		* FIRE ALARM *
SECURITY			200				20	1	12	11	12	12	1	20						800	GFI/WP REC
SPARE							20	1	12	13	14	12	1	20							SPARE
SPARE							20	1	12	15	16	12	1	20							SPARE
SPARE							20	1	12	17	18	12	1	20							SPARE
SPARE							20	1	12	19	20	12	1	20							SPARE
SPARE							20	1	12	21	22	12	1	20							SPARE
SPARE							20	1	12	23	24	12	1	20							SPARE
SPARE							20	1	12	25	26	12	1	20							SPARE
SPARE							20	1	12	27	28	12	1	20							SPARE
SPARE							20	1	12	29	30	12	1	20							SPARE
SPARE							20	1	12	31	32	12	1	20							SPARE
SPARE							20	1	12	33	34	12	1	20							SPARE
SPARE							20	1	12	35	36	12	1	20							SPARE
SPARE							20	1	12	37	38	12	1	20							SPARE
SPARE							20	1	12	39	40	12	1	20							SPARE
SPARE							20	1	12	41	42	12	1	20							SPARE
CONNECTED LOADS=	2000	800	800															2400	1200	1800	CONNECTED LOADS=

TOTAL WATTS= 9000 | ΦA= 4400 | ΦB= 2000 | ΦC= 2600
AMPS= 24.982 | MINIMUM BKR | A.I.C. RATING= SERIES
DEMAND FACTOR 125% 31.227

PHASE A = 4400
PHASE B = 2000
PHASE C = 2600
TOTAL WATTS 9000

* RED LOCKED DEDICATED CIRCUIT ACCESSIBLE TO AUTHORIZED PERSONNEL ONLY - BREAKER TO BE PERMANENTLY IDENTIFIED AT FIRE ALARM CONTROL UNIT

LIGHT FIXTURE SCHEDULE

VOLTAGE: UNV (U.O.N.)

TYPE	INPUT WATTS	DESCRIPTION AND MANUFACTURER	REMARKS
F1	77	2x4 LED TROFFER #12 ACRYLIC .125" THICK LENS (OR EQUAL) VOLTAGE: UNV LAMP: LED – 3419 LUMENS MANUFACTURER: COLUMBIA LIGHTING LJT-24-40VLG-FSA12-EDU	*F1E DESIGNATES EMERGENCY BALLAST FIXTURE ELL14 W/ 90 MIN. BATTERY BACK-UP – –
F2	29	OUTDOOR LED CAN LIGHT – VOLTAGE: UNV LAMP: LED MANUFACTURER: PRESCOLITE LIGHTING LF8SL-DM1-8LFSL-20L-40K	*F2E DESIGNATES EMERGENCY BALLAST FIXTURE EMR W/ 90 MIN. BATTERY BACK-UP – –
X1	3.8	LED EXIT/EMERGENCY UNIT COMBO – VOLTAGE: UNV LAMP: (2) 4.12W LED MANUFACTURER: COMPASS – CCR LED	– – – – –

* ALL EXTERIOR LIGHT FIXTURES SHALL BE DARK SKY COMPLIANT AND SHALL NOT EXCEED BUG RATING REQUIREMENTS AS SHOWN IN TABLE 5.106.8 OF THE CALIFORNIA ENERGY CODE.

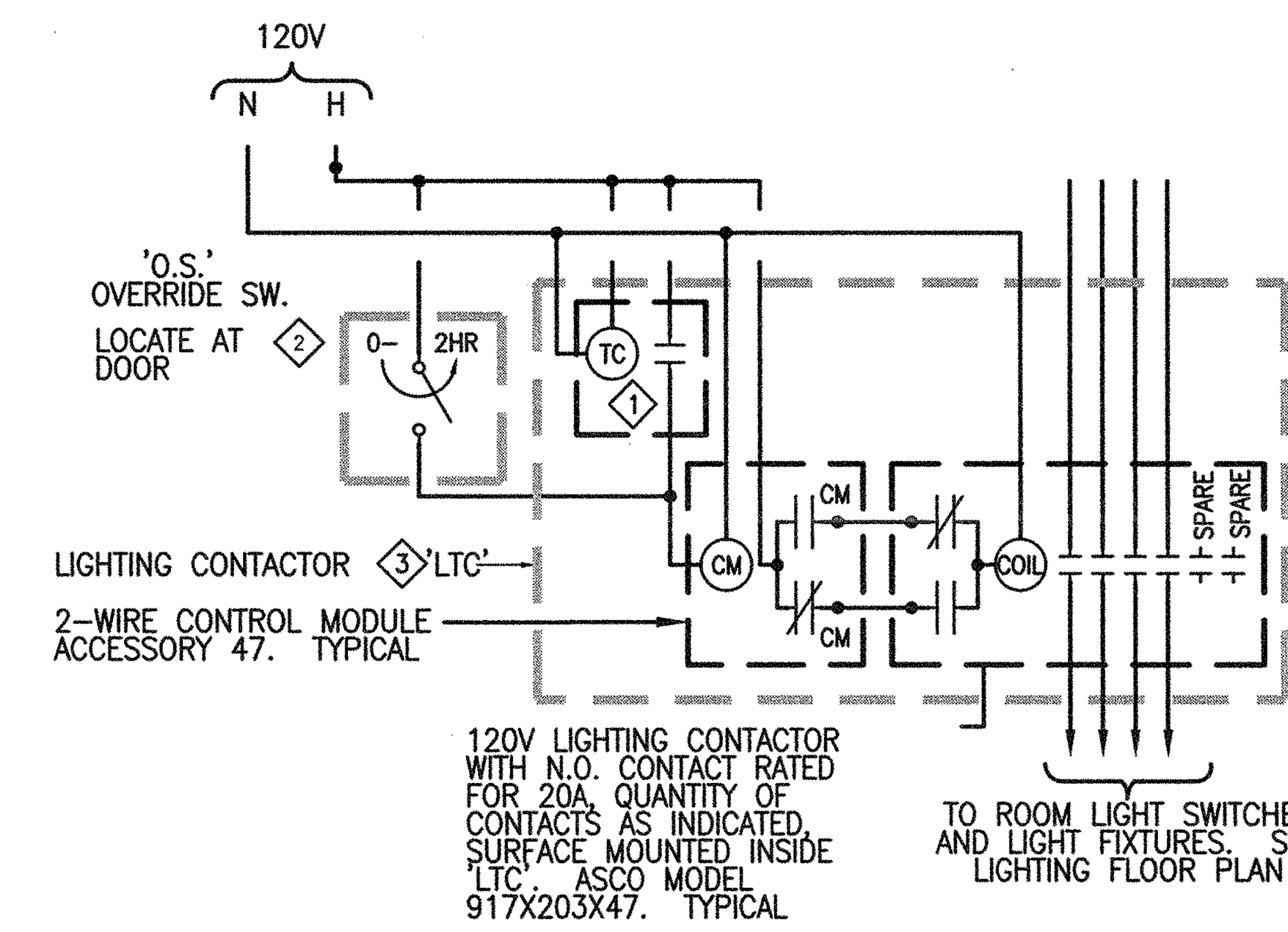

GENERAL NOTES

1. LIGHTING CONTROL SEQUENCE OF OPERATION:
   a. TIME CLOCK TO TURN ALL INTERIOR LIGHT FIXTURES ON AND OFF AT THE DAILY PRESET SCHEDULE.
   b. OVERRIDE SWITCH TO TURN ON LIGHT FIXTURES AFTER TIME CLOCK SCHEDULED OFF FOR MAXIMUM 2 HOURS.
2. ALL LIGHTING CONTROL EQUIPMENT/DEVICES SHALL BE CERTIFIED. ALL CONTROL WIRING SHALL COMPLY WITH CEC REQUIREMENTS; THE SYSTEM SHALL BE INSTALLED AS DIRECTED BY THE MANUFACTURER.

NOTES

(1) ASTRONOMICAL TIME CLOCK WITH MULTIPLE CHANNELS, 7-DAY TIME SWITCH, 365 DAY ADVANCE SCHEDULING WITH HOLIDAY CAPABILITY, AUTOMATIC LEAP YEAR COMPENSATION, POWER FAILURE MEMORY, AND 72-HOUR BATTERY BACKUP.
(2) 0-2 HOUR INTERVAL TIMER.
(3) LIGHTING TERMINAL CABINET

5 ASTRONOMICAL TIMECLOCK DIAGRAM
NTS

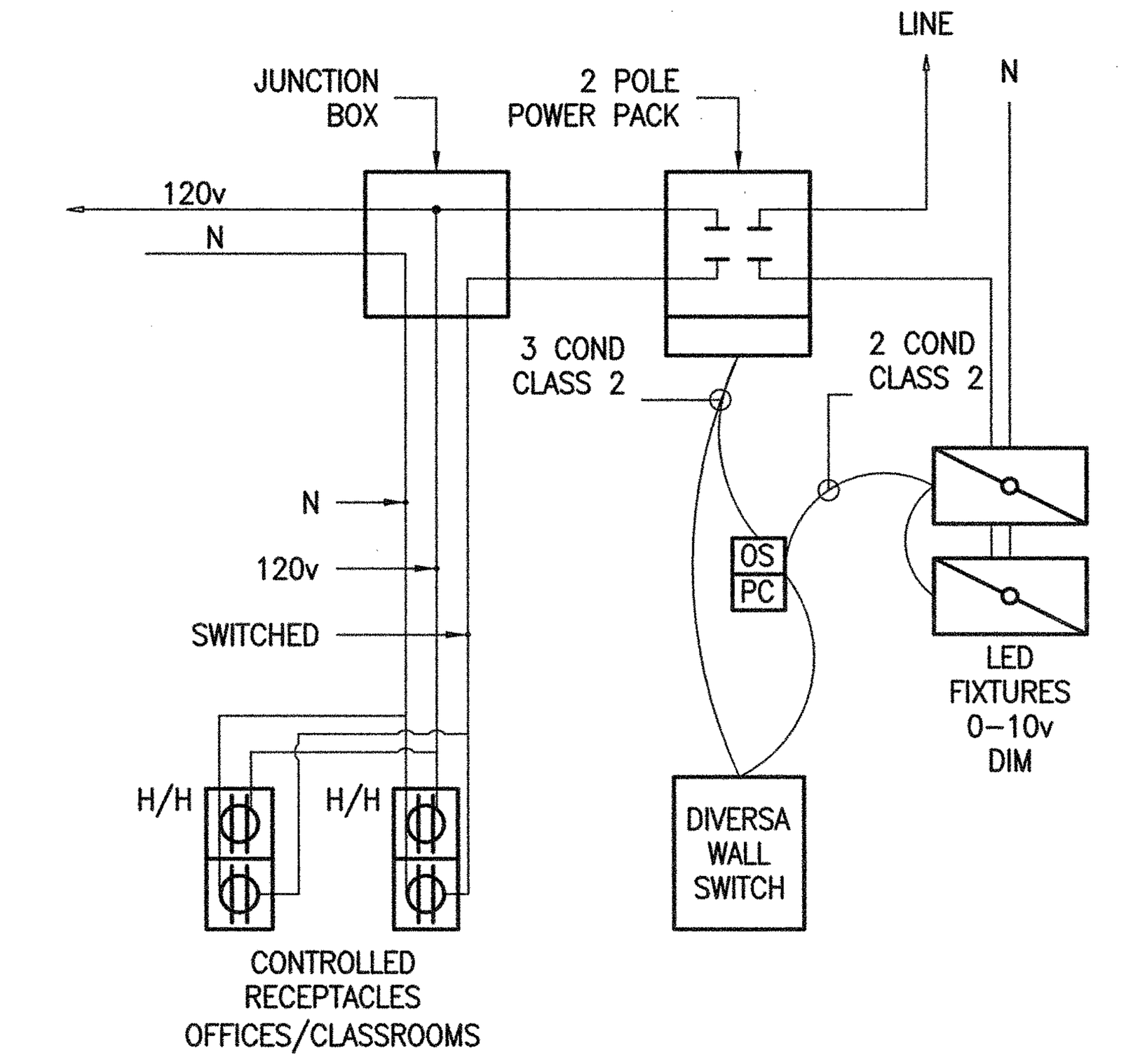

1 TITLE 24 CONTROLS DIAGRAM
NTS

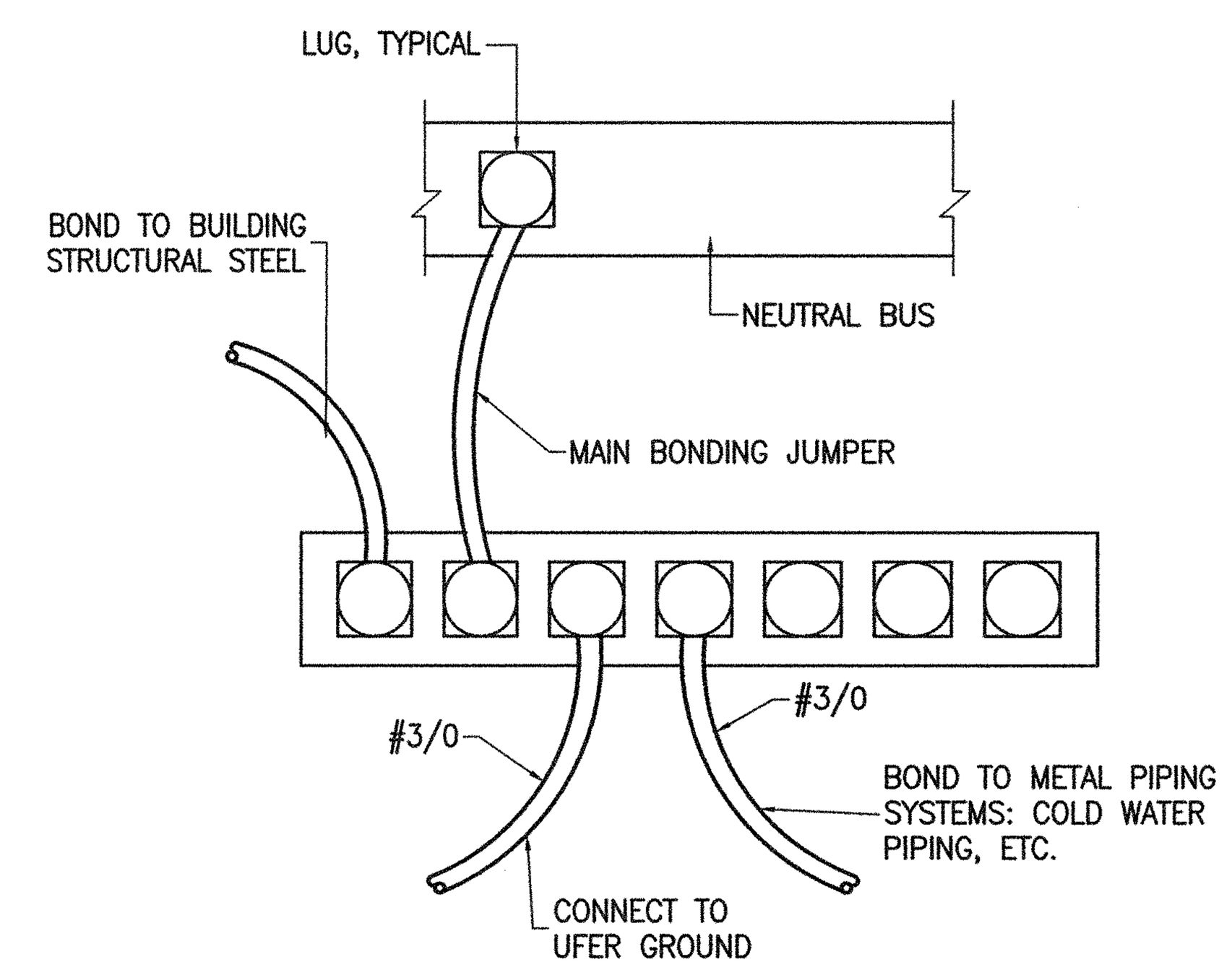

6 BONDING DETAIL
NTS

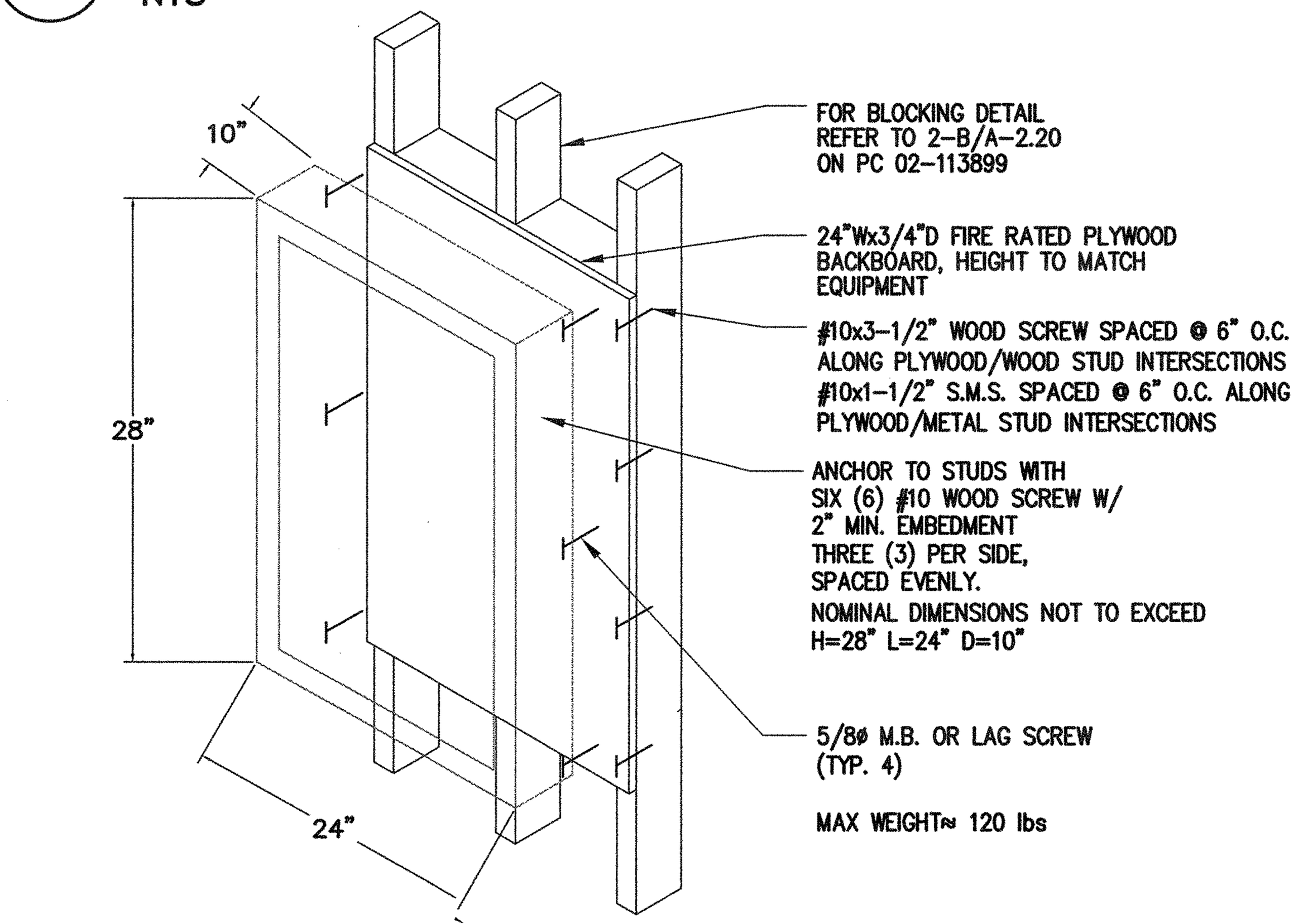

2 IDF MOUNTING DETAIL
NTS

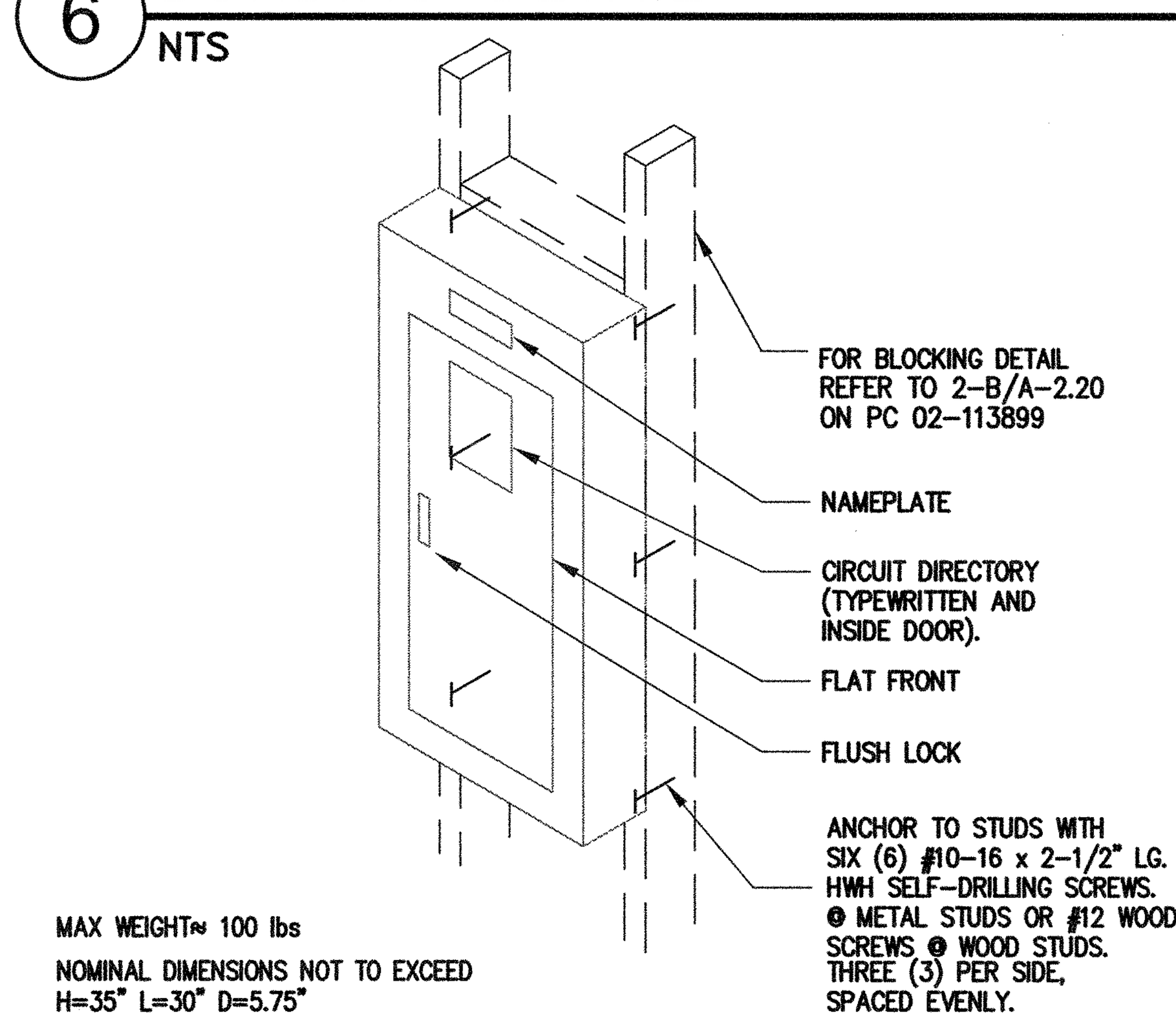

7 PANEL MTG – SURFACE
NTS

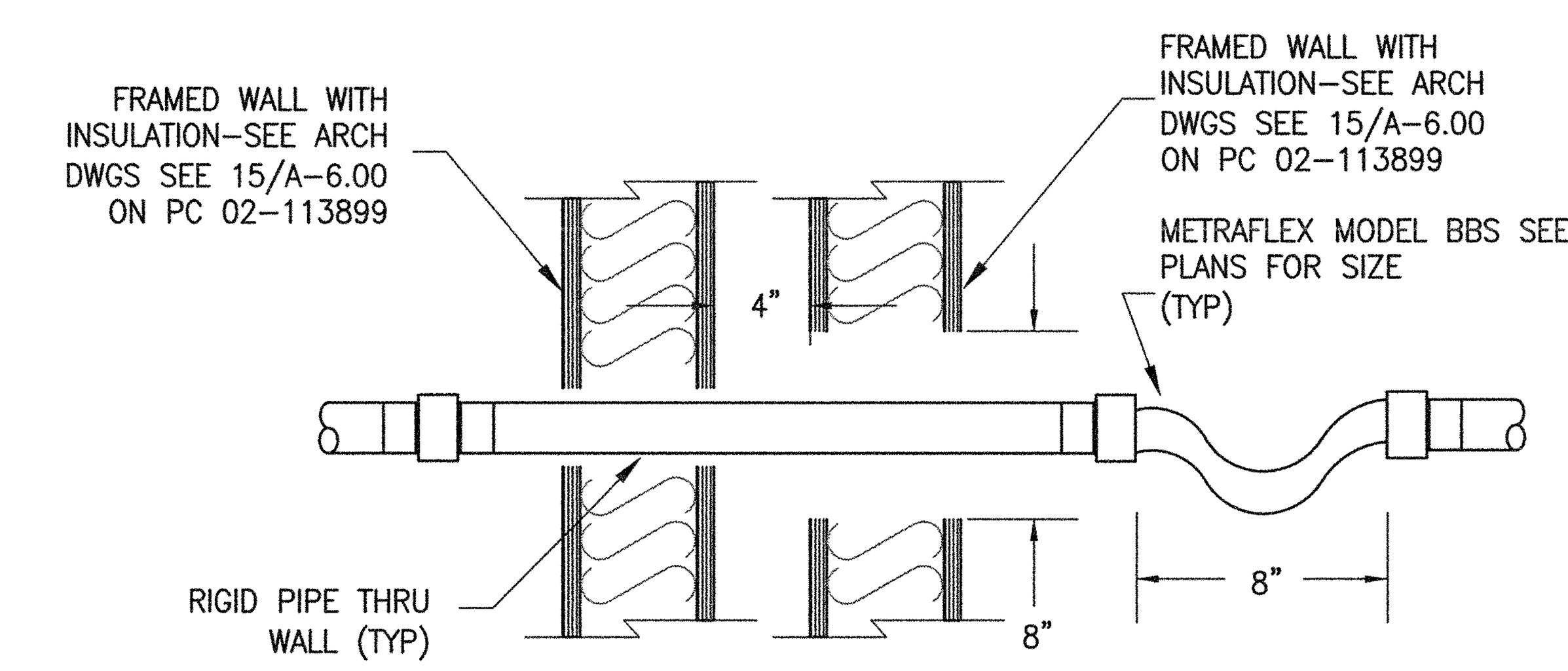

3 FLEX. CONNECTION @ BLDG. MODULE
NTS

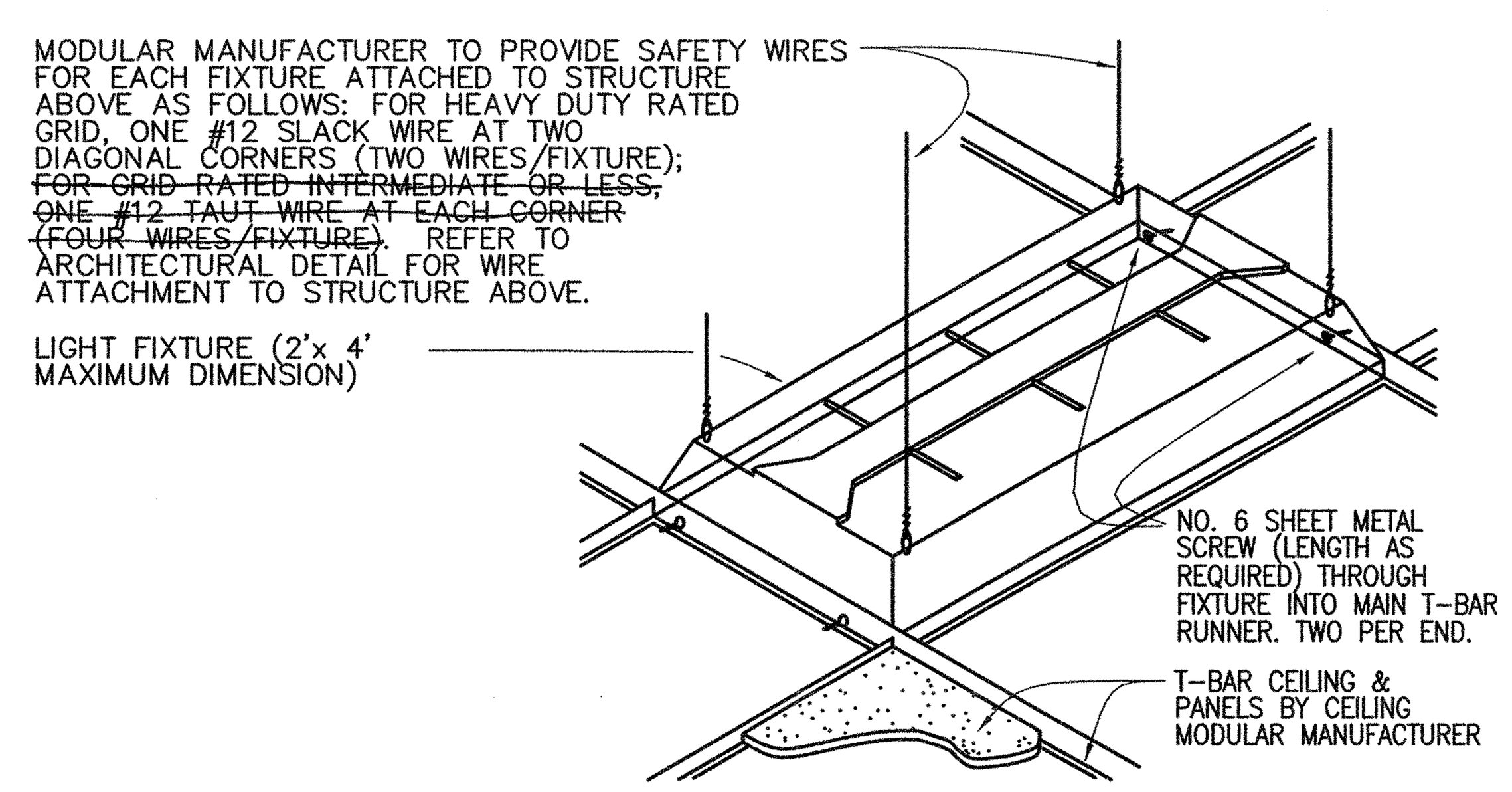

8 RECESSED FIXT. MTG.
NTS

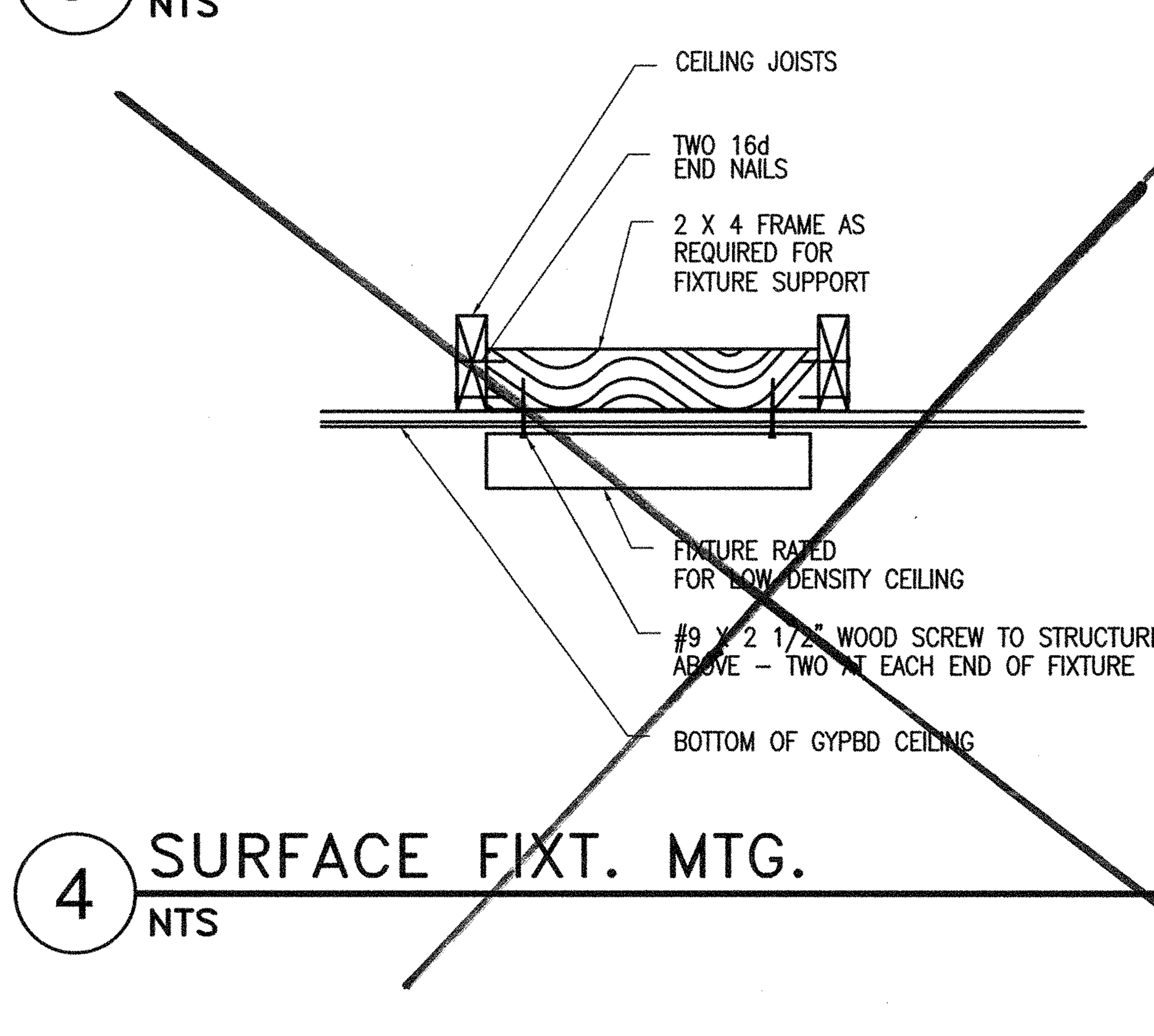

4 SURFACE FIXT. MTG.
NTS

JTS MODULAR
DESIGN • BUILD • TRANSPORT • ENJOY
7001 MC Divitt DRIVE
BAKERSFIELD, CA 93313
WWW.JTSMODULAR.COM
OFFICE: (661) 835-9270

LICENSE #E18218
CANTELMI ENGINEERING
2130 F STREET
BAKERSFIELD, CA 93301
TEL: (661) 324-5252
FAX: (661) 324-8439
Cantelmi@Cantelmi.NET
7/16/18

REGISTERED PROFESSIONAL ENGINEER KAREN A. MARTINEZ E 18218 ELECTRICAL STATE OF CALIFORNIA

REGISTERED PROFESSIONAL ENGINEER RYAN J. OMER No. S 4437 EXP. 12/31/18 STRUCTURAL STATE OF CALIFORNIA

MONSON - SULTANA ELEMENTARY SCHOOL
CLASSROOM - SLAB ON GRADE PC (02-113899)
10643 AVENUE 416, DINUBA, CA 93618
MONSON - SULTANA JOINT UNION ELEMENTARY SCHOOL DISTRICT

IDENTIFICATION STAMP
DIVISION OF THE STATE ARCHITECT
CODE 2013 CBC

IDENTIFICATION STAMP DIV. OF THE STATE ARCHITECT
02 117009
AC FLS SS
DATE 7/23/18

JTS JOB#: 06-0246
DATE: 7/16/2018

file: S:\DWGS2018\JTS\MONSON SALTANA C18-117\C18-117_ELECT_R3.dwg date: 7/16/2018 2:30 PM

ELECTRICAL DETAILS

E-5.04-R

PLUMBING ABBREVIATIONS

&	AND	FA	FIRE ALARM	PREFAB	PREFABRICATED
∠	ANGLE	FCO	FLOOR CLEANOUT	PREP	PREPARATION
@	AT	FD	FLOOR DRAIN	PT	PLUGGED TEE
℄	CENTER LINE	FDN	FOUNDATION	PW	PROCESSED WATER
ℙ	PROPERTY LINE	FE	FIRE EXTINGUISHER		
ø	DIAMETER or ROUND	FEC	FIRE EXTINGUISHER CABINET		
(E)	EXISTING	FH	FIRE HYDRANT	R	RISER
(N)	NEW	FHC	FIRE HOSE CAB.	RAD.	RADIUS
⊥	PERPENDICULAR	FHMS	FLAT HEAD METAL SCREW	RD	ROOF DRAIN
#	POUND or NUMBER	FIN.	FINISH	REC	RECTANGULAR
		FL	FLOOR	REF	REFERENCE
A/C	AIR CONDITIONING	FLASH.	FLASHING	REINF	REINFORCED
AP	ACCESS PANEL	FM	FIRE MAIN	REQD	REQUIRED
AD.	AREA DRAIN	FOC	FACE OF CONCRETE	RM	ROOM
ADJ	ADJUSTABLE	FOF	FACE OF FINISH	RWL	RAINWATER LEADER
ADMIN	ADMINISTRATION	FR	FRAME		
AGGR	AGGREGATE	FRPF	FIREPROOFING		
AL	ALUMINUM	FS	FLOOR SINK	S	SINK or SOUTH
APPROX	APPROXIMATE	FSH	FIRE SPRINKLER HEAD	SA	WATER HAMMER ARRESTER
APPT	APPOINTMENTS	FSL	FIRE SPRINKLER LINE	SB	SPLASH BLOCK
ARCH.	ARCHITECTURAL	FTR	FLUE THRU ROOF	SCHD	SCHEDULE
ASB	ASBESTOS	FUNC	FUNCTION	SDL	STORM DRAIN LINE
ASPH	ASPHALT	FURR	FURRING	SECT.	SECTION
ASST	ASSISTANT	FUT	FUTURE	SH	SHOWER
AUTO.	AUTOMATIC			SHT	SHEET
				SIM	SIMILAR
		GA	GAUGE	SL	SPRINKLER LINE
BD	BOARD	GALV	GALVANIZED	SPEC	SPECIFICATION
(BF)	BELOW FINISH FLOOR	GC	GAS COCK	SOV	SHUT-OFF VALVE
(BG)	BELOW FINISH GRADE	GEN	GENERAL	SS	SERVICE SINK
BLDG	BUILDING	GI	GALVANIZED IRON	SST	STAINLESS STEEL
BLKG	BLOCKING	GL	GLASS	STD	STANDARD
BM	BEAM	GR	GRADE	STL	STEEL
BOT	BOTTOM	GRD	GROUND	STOR	STORAGE
BV	BALL VALVE	G	GAS LINE	STRUCT	STRUCTURAL
				SUPV	SUPERVISOR
CB	CATCH BASIN	HB	HOSE BIBB	SUSP	SUSPENDED
CD	CONDENSATE DRAIN	HC	HANDICAPPED	S&W	SOIL & WASTE
CEM	CEMENT	HD	HEAD	TC	TOP OF CURB
CER	CERAMIC	HDWE	HARDWARE	TEL	TELEPHONE
CI	CAST IRON	HI.	HIGH	TER	TERRAZZO
CJ	CONTROL JOINT	HORIZ	HORIZONTAL	THK	THICK
CLG	CEILING	HP	HIGH PRESSURE	TOC	TOP OF CONCRETE
CLKG	CAULKING	HR	HOUR	TA	TRAP ARM
CLR	CLEAR	HT	HEIGHT	TP	TRAP PRIMER
CO	CLEANOUT	HVAC	HEATING, VENTILATING, AIR CONDITIONING	TRANS	TRANSCRIPTION
COL	COLUMN			TREAT.	TREATMENT
COMP	COMPRESSED			TYP	TYPICAL
CONC	CONCRETE	ID	INSIDE DIAMETER (DIM.)	TV	TEMPERING VALVE
CONF	CONFERENCE	INSUL	INSULATION		
CONN	CONNECTION	INT	INTERIOR	UL	UNDERWRITERS LABORATORIES
CONST	CONSTRUCTION	IW	IRRIGATION WATER	UON	UNLESS OTHERWISE NOTED
CONT	CONTINUOUS			UR	URINAL
CORR	CORRIDOR	LAV	LAVATORY		
COTG	CLEANOUT TO GRADE	LPG	LIQUID PETROLEUM GAS		
CP	CIRCULATING PUMP			V	VENT
CKS	COUNTERSUNK			VA	VALVE
CTR	CENTER	M	MEN	VC	VITRIFIED CLAY
CV	CHECK VALVE	MACH	MACHINE	VR	VENT RISER
		MATL	MATERIAL	VTR	VENT THRU ROOF
DBL	DOUBLE	MAX.	MAXIMUM	VO	VENT OFFSET
DCW	DOMESTIC COLD WATER	MECH	MECHANICAL		
DEPT	DEPARTMENT	MS	MOP SINK		
DET	DETAIL	MTL	METAL	W	WASTE LINE
DF	DRINKING FOUNTAIN	MFGR	MANUFACTURER	W/	WITH
DHW	DOMESTIC HOT WATER	MH	MANHOLE	WC	WATER CLOSET
DHWR	DOMESTIC HOT WATER RETURN	MIN	MINIMUM	WCO	WALL CLEANOUT
DIA or ø	DIAMETER	MISC	MISCELLANEOUS	WH	WATER HEATER
DIR	DIRECTOR	MONIT	MONITOR	WHA	WATER HAMMER ARRESTOR
DN	DOWN			W/O	WITHOUT
DR	DOOR			WMF	WASHING MACHINE FITTING
DS	DOWNSPOUT	N	NORTH	WP	WATERPROOF
DSP	DRY STANDPIPE	NIC	NOT IN CONTRACT	WT	WEIGHT
DTW	DOMESTIC TEMPERED WATER	NO. or #	NUMBER		
DWG	DRAWING	NOM	NOMINAL		
		NTS	NOT TO SCALE	YD	YARD
E	EAST				
EA	EACH	OA	OVERALL		
EDF	ELECTRIC DRINKING FOUNTAIN	OAV	OXYGEN, AIR & VACUUM		
ELEC	ELECTRICAL	OC	ON CENTER		
ELEV	ELEVATION	OVHD	OVERHEAD		
EMER	EMERGENCY	OX.	OXYGEN		
ENCL	ENCLOSURE				
EO	ELECTRICAL OUTLET	PTN	PARTITION		
EP	ELECTRICAL PANEL	PHYS	PHYSICAL		
EQ	EQUAL	PR	PRESSURE REGULATOR		
EQUIP	EQUIPMENT	PVC	POLY-VINYL CHLORIDE PIPE		
(E)	EXISTING	PLAS	PLASTER		
EXP	EXPANSION	PLYWD	PLYWOOD		
EXPO.	EXPOSED	POC	POINT OF CONNECTION		
EXT	EXTERIOR				

SYMBOLS

SYMBOL	DESCRIPTION
	BALL VALVE
	BRANCH TOP CONNECTION
	BRANCH BOTTOM CONNECTION
	CAPPED PIPE
	CHECK VALVE
	CLEANOUT
	CLEANOUT TO GRADE
	CIRCULATING PUMP
	CONDENSATE DRAIN
	CONDENSATE "P" TRAP
	DOMESTIC COLD WATER
	DOMESTIC HOT WATER
	DOMESTIC HOT WATER RETURN
	EXISTING WASTE OR SOIL & WASTE
	EXISTING TO BE REMOVED
	FIRE HYDRANT
	FLOOR CLEANOUT
FS	FLOOR SINK
	GAS
	GAS COCK
	GAS METER
	GAS PRESSURE REGULATOR
	GATE VALVE
	HOSE BIBB
	ICE-MAKER CONNECTION BOX
	PIPE RISER (ELBOW)
	PIPE DROP (ELBOW)
	PIPE DROP OR RISER
WC 1	PLUMBING EQUIPMENT DESIGNATION SEE PLUMBING EQUIPMENT SCHEDULE
	POINT OF CONNECTION
	PROCESS WASTE
	SHUT-OFF VALVE.
	SHUT-OFF VALVE IN YARDBOX
	SOIL & WASTE
	TRAP PRIMER
— — —	VENT
— — —	VENT OFFSET
	VENT THRU ROOF
	WALL CLEANOUT
	WASTE
	WATER HAMMER

MEP COMPONENT ANCHORAGE NOTE

ALL MECHANICAL, PLUMBING, AND ELECTRICAL COMPONENTS SHALL BE ANCHORED AND INSTALLED PER THE DETAILS ON THE DSA APPROVED CONSTRUCTION DOCUMENTS. WHERE NO DETAIL IS INDICATED, THE FOLLOWING COMPONENTS SHALL BE ANCHORED OR BRACED TO MEET THE FORCE AND DISPLACEMENT REQUIREMENTS PRESCRIBED IN THE 2013 CBC, SECTIONS 1616A.1.18 THROUGH 1616A.1.26 ANS ASCE 7–10 CHAPTER 13, 26 AND 30.

1. ALL PERMANENT EQUIPMENT AND COMPONENTS.
2. TEMPORARY OR MOVABLE EQUIPMENT THAT IS PERMANENTLY ATTACHED (E.G. HARD WIRED) TO THE BUILDING UTILITY SERVICES SUCH AS ELECTRICITY GAS OR WATER.
3. MOVABLY EQUIPMENT WHICH IS STATIONED IN ONE PLACE FOR MORE THAN 8 HOURS AND HEAVIER THAN 400 POUNDS ARE REQUIRED TO BE ANCHORED WITH TEMPORARY ATTACHMENTS.

THE ATTACHMENT OF THE FOLLOWING MECHANICAL AND ELECTRICAL COMPONENTS SHALL BE POSITIVELY ATTACHED TO THE STRUCTURE, BUT NEED NOT BE DETAILED ON THE PLANS. THESE COMPONENTS SHALL HAVE FLEXIBLE CONNECTIONS PROVIDED BETWEEN THE COMPONENT AND ASSOCIATED DUCTWORK, PIPING, AND CONDUIT.

A. COMPONENTS WEIGHING LESS THAN 400 POUNDS AND HAVE A CENTER OF MASS LOCATED 4 FEET OR LESS ABOVE THE ADJACENT FLOOR OR ROOF LEVEL THAT DIRECTLY SUPPORT THE COMPONENT.
B. COMPONENTS WEIGHING LESS THAN 20 POUNDS, OR IN THE CASE OF DISTRIBUTED SYSTEMS LEES THAN 5 POUNDS PER FOOT, WHICH ARE SUSPENDED FROM A ROOF OR FLOOR OR HUNG FROM A WALL.

FOR THOSE ELEMENTS THAT DO NOT REQUIRE DETAILS ON APPROVED DRAWINGS, THE INSTALLATION SHALL BE SUBJECT TO THE APPROVAL OF THE STRUCTURAL ENGINEER OF RECORD AND THE DSA DISTRICT STRUCTURAL ENGINEER. THE PROJECT INSPECTOR WILL VERIFY THAT ALL COMPONENTS AND EQUIPMENT HAVE BEEN ANCHORED IN ACCORDANCE WITH ABOVE REQUIREMENTS.

PLUMBING, DUCTWORK, AND ELECTRICAL DISTRIBUTION SYSTEM BRACING NOTE

PIPING, DUCTWORK, AND ELECTRICAL DISTRIBUTION SYSTEMS SHALL BE BRACED TO COMPLY WITH THE FORCES AND DISPLACEMENTS PRESCRIBED IN ASCE 7–10 SECTION 13.3 AS DEFINED IN ASCE 7–10 SECTION 13.6.8, 13.6.7, 13.6.5.6, AND 2013 CBC, SECTIONS 1616A.1.23, 1616A.1.24, 1616A.1.25 AND 1616A.1.26

THE BRACING AND ATTACHMENTS TO THE STRUCTURE SHALL BE DETAILED ON THE APPROVED DRAWINGS OR THEY SHALL COMPLY WITH ONE OF THE OSHPD PRE-APPROVALS (OPM#) AS MODIFIED TO SATISFY ANCHORAGE REQUIREMENTS OF ACI 318, APPENDIX D.

COPIES OF THE MANUAL SHALL BE AVAILABLE ON THE JOBSITE PRIOR TO THE START OF HANGING AND BRACING OF THE PIPE, DUCTWORK, AND ELECTRICAL DISTRIBUTION SYSTEMS.

THE STRUCTURAL ENGINEER OF RECORD SHALL VERIFY THE ADEQUACY OF THE STRUCTURE TO SUPPORT THE HANGER AND BRACE LOADS

GENERAL PLUMBING NOTES

SECTION 1
BASIC MECHANICAL MATERIALS AND METHODS

PART 1 – GENERAL

1.1 SUMMARY

A. LABOR, MATERIALS, TOOLS, AND SERVICES FOR A COMPLETE INSTALLATION OF EQUIPMENT AND SYSTEM CONTAINED IN THE CONTRACT DOCUMENTS.

B. PRINCIPAL FEATURES OF THE WORK INCLUDED ARE:
1. PLUMBING SYSTEM AND RELATED PIPING INSULATION.
2. DOMESTIC WATER PIPING, VALVES, CONNECTIONS AND RELATED PIPING INSULATION.
3. AREA FIRE PROTECTION (SPRINKLER SYSTEMS)
4. EXCAVATING AND BACKFILLING FOR MECHANICAL WORK; COORDINATE WITH APPROPRIATE TRADE.
5. ANCHOR BOLTS, SLEEVES, SUPPORTS AND SIMILAR ITEMS TO BE BUILT INTO CONCRETE OR MASONRY.
6. PREPARATION AND SUBMITTAL OF SHOP DRAWING AND PRODUCT DATA.
7. MAINTAINING A RECORD SET OF BLUE LINE PRINTS AND MAKING THEM TO INDICATE LOCATIONS OF CONCEALED ITEMS, AND DEVIATIONS MADE TO SUIT CONDITIONS AND PRODUCTION OF MECHANICAL AS– BUILT (RECORD) DRAWINGS.

1.2 JOB CONDITIONS.

A. SUBMITTAL OF BID IMPLIES BIDDER HAS READ APPLICABLE PARAGRAPHS OF THE SPECIFICATIONS AND WILL BE BOUND BY THEIR CONDITIONS.

1.3 LOCAL CONDITIONS

A. CONFORM WITH LOCAL CONDITIONS. COORDINATE WITH LOCAL UTILITIES ON SIZE OF UTILITY SERVICE AND LOCATION.

1.4 INTENT

A. THE CONTRACT DOCUMENTS (DRAWINGS AND SPECIFICATIONS) DESCRIBE THE PLUMBING WORK OF THIS PROJECT ANY ITEMS MENTIONED IN ONE PART SHALL BE AS BINDING AS THOUGH MENTIONED IN BOTH.

B. THE CONTRACT DOCUMENTS FORM A GUIDE FOR A COMPLETE PLUMBING INSTALLATION. WHERE AN ITEM IS REASONABLY NECESSARY BUT NOT SPECIFICALLY MENTIONED, SUCH AS PIPING OFFSETS, DRAINS, ETC., FOR A COMPLETE SYSTEM, PROVIDE SAME.

C. PLUMBING LAYOUTS INDICATED ON DRAWINGS ARE DIAGRAMATIC ONLY. EXACT LOCATIONS OF PIPES, AND EQUIPMENT SHALL BE GOVERNED BY THE DRAWINGS OF RELATED TRADES.

1.5 DEVIATIONS

A. NO DEVIATIONS FROM SPECIFICATIONS AND DRAWINGS SHALL BE MADE WITHOUT FULL KNOWLEDGE AND WRITTEN CONSENT OF CONSTRUCTION MANAGER.

B. SHOULD CONTRACTOR FIND, DURING PROGRESS OF WORK, CONDITIONS WHICH DICTATE A MODIFICATION OF ANY PARTICULAR REQUIREMENTS, REPORT SUCH ITEM PROMPTLY FOR DECISION OF INSTRUCTIONS.

1.6 QUALITY ASSURANCE

A. COMPLY WITH APPLICABLE LOCAL, STATE AND FEDERAL CODES.

B. COMPLY WITH APPLICABLE REQUIREMENTS OF RECOGNIZED INDUSTRY ASSOCIATIONS WITH PROMULGATE STANDARDS FOR THE VARIOUS TRADES. (SEE INDIVIDUAL SECTIONS OF DIVISION 15)

C. EMPLOY ONLY QUALIFIED JOURNEYMEN FOR THIS WORK. EMPLOY COMPETENT, QUALIFIED PLUMBERS TO SUPERVISE THE WORK.

1.7 CODES AND STANDARDS

A. PERFORM WORK SPECIFIED IN DIVISION 15 IN ACCORDANCE WITH THE APPLICABLE CODES AND STANDARDS LISTED BELOW, AND SUCH STANDARDS THAT MAY BE SPECIFIED IN OTHER SECTIONS. WHEN THESE SPECIFICATIONS ARE MORE STRINGENT, THEY TAKE PRECEDENCE. IN CASE OF CONFLICT, OBTAIN A DECISION FROM THE PLUMBING ENGINEER.
1. NFPA 54: NATIONAL FUEL AND GAS CODE.
2. NFPA 101: LIFE SAFETY CODE.
3. CALIFORNIA BUILDING CODE.
4. CALIFORNIA PLUMBING CODE.
5. HANDICAPPED CODE ANSI A117.1 AND ADA
6. APPLICABLE STATE ENERGY CODE.
7. AGA: AMERICAN GAS ASSOCIATION.
8. ANSI: AMERICAN NATIONAL STANDARDS INSTITUTE.
9. ASTM: AMERICAN SOCIETY FOR TESTING AND MATERIALS.
10. MSS: MANUFACTURER'S STANDARDIZATION SOCIETY OF THE VALVE AND FITTING INDUSTRY.
11. NEMA: NATIONAL ELECTRICAL MANUFACTURER'S ASSOCIATION
12. NFPA: NATIONAL FIRE PROTECTION ASSOCIATION.
13. UL: UNDERWRITERS' LABORATORIES, INC.

1.8 COORDINATION

A. CAREFULLY EXAMINE SPECIFICATIONS AND DRAWINGS TO BE THOROUGHLY FAMILIAR WITH ITEMS WHICH REQUIRE PLUMBING AND COORDINATION.

B. COORDINATE WITH OTHER DIVISIONS TO LEAVE PROPER CHASES AND OPENINGS. PLACE OUTLETS, ANCHORS, SLEEVES, AND SUPPORTS PRIOR TO POURING CONCRETE OF INSTALLATION OF MASONRY WORK.

1.9 SUBMITALS

A. SUBMITTALS ARE ONLY REQUIRED FOR SPECIFIC ITEMS OF EQUIPMENT OR MATERIAL LISTED IN INDIVIDUAL SECTIONS OF THESE SPECIFICATIONS.

B. WITHIN 15 DAYS AFTER AWARD OF CONTRACT FOR THIS WORK, SUBMIT A LIST OF PROPOSED MANUFACTURERS (OF EQUIPMENT OR MATERIAL TO BE USED) FOR APPROVAL. SUBMIT THIS LIST BEFORE SUBMITTAL OF SHOP DRAWINGS AND PRODUCT DATA, AND OBTAIN APPROVAL BEFORE SUBMITTING REQUIRED ITEMS.

C. SHOP DRAWINGS (NOT REQUIRED FOR OWNER FURNISHED EQUIPMENT).

1.10 DELIVERY AND STORAGE

A. IN SO FAR AS POSSIBLE, DELIVER ITEMS IN MANUFACTURER'S ORIGINAL UNOPENED PACKAGING. WHERE THAT IS NOT PRACTICAL, COVER ITEMS WITH PROTECTIVE MATERIALS TO KEEP THEM FROM BEING DAMAGED. USE CARE IN LOADING, TRANSPORT, UNLOADING, AND STORAGE TO KEEP ITEMS FROM BEING DAMAGED.

1.11 FIRE RATINGS

A. MATERIALS USED ANYWHERE IN THE WORK MUST HAVE NFPA RATINGS AS FOLLOWING:
1. FLAME SPREAD – NOT OVER 25
2. SMOKE DEVELOPED – NOT OVER 50
3. FUEL CONTRIBUTED – NOT OVER 25

B. MATERIALS SHALL BE "SELF EXTINGUISHING".

C. PIPE PENETRATIONS SHALL BE FIRE RATED WITH A U.L. LISTING OF NOT LESS THAN THAT OF THE RATED WALL PENETRATION. SEE ARCHITECTURAL DRAWINGS FOR ALL FIRE RATING WITHIN BUILDING.

1.12 PERMITS AND FEES

A. OBTAIN, PAY FOR, AND DELIVER PERMITS, CERTIFICATION OF INSPECTION, AND OTHER SUCH ITEMS REQUIRED BY THE AUTHORITIES HAVING JURISDICTION. DELIVER CERTIFICATION TO THE CONSTRUCTION MANAGER PRIOR TO FINAL ACCEPTANCE OF THE WORK. AN INSPECTION CERTIFICATE FOR EACH CLASS OF WORK REQUIRING INSPECTION MUST BE SUBMITTED PRIOR TO OR WITH THE FINAL PAYMENT INVOICE. THE RESPONSIBLE TRADE CONTRACTOR MUST MAKE APPLICATION FOR THE INSPECTION, COORDINATE SAME AND PAY THE REQUIRED INSPECTION FEE.

1.13 EXTENDED WARRANTIES

A. WORK FURNISHED UNDER THE CONTRACT SHALL BE WARRANTED AGAINST DEFECTS IN WORKMANSHIP AND (CONTRACTOR FURNISHED) MATERIALS FOR A PERIOD OF NOT LESS THAT ONE (1) YEAR, OR AS OTHERWISE SPECIFIED, FROM THE DATE OF FINAL ACCEPTANCE OF THE INSTALLATION, DEFECTS OF WORKMANSHIP DEVELOPING DURING THIS PERIOD SHALL BE REMEDIED, AND DEFECTIVE MATERIAL REPLACED, WITHOUT ADDITIONAL COST. WHEN DEFECTS IN A TRADE CONTRACTOR'S WORK CAUSES DAMAGE TO THE WORK OF THE OTHER TRADE CONTRACTORS, SUCH DAMAGE SHALL BE REPAIRED BY THE TRADE CONTRACTOR CAUSING DAMAGE AND WORK RESTORED TO ITS ORIGINAL CONDITION, AT THE EXPENSE OF THE TRADE CONTRACTOR THAT CAUSED THE DAMAGE.

PART 2 – PRODUCTS

2.1 MATERIALS AND EQUIPMENT

A. WITHIN THE CONTRACT DOCUMENTS RELATING TO PLUMBING WORK, MANUFACTURER'S NAMES, CATALOG NUMBERS, AND OTHER PROPRIETARY REFERENCES TO MATERIALS AND EQUIPMENT ARE MADE. SUCH REFERENCES ARE MADE TO ESTABLISH THE STANDARDS OF QUALITY AND TYPE REQUIRED, AND NOT TO LIMIT COMPETITION. ACCEPTABLE MANUFACTURER'S OF COMPETITIVE PRODUCTS ARE LISTED IN APPLICABLE SECTIONS AS "APPROVED EQUALS". REASONABLE REQUESTS FOR SUBSTITUTION OR ADDITIONS TO "APPROVED EQUALS" WILL BE CONSIDERED, BUT THE MECHANICAL ENGINEER WILL BE THE SOLE JUDGE OF ACCEPTABILITY OF ITEMS PROPOSED AS SUBSTITUTES.

B. MATERIALS AND EQUIPMENT USED IN CARRYING OUT THESE SPECIFICATIONS SHALL BEAR UL OR OTHER RECOGNIZED TESTING LABORATORY LABEL WHEN SUCH LABELS ARE AVAILABLE.

PART 3 – EXECUTION

3.1 LOCATIONS

A. PLUMBING LAYOUTS INDICATED ON DRAWINGS ARE DIAGRAMMATIC. EXACT LOCATIONS OF PIPES, AND EQUIPMENT MAY VARY BECAUSE OF CONFLICTS WITH WORK OF OTHER TRADES. WORK OUT CONFLICTS WHERE RELOCATION'S WILL NOT AFFECT OPERATION OR APPEARANCE OF SYSTEMS.

B. LOCATE EQUIPMENT REQUIRING PERIODIC SERVICING SO THAT IT IS READILY ACCESSIBLE. DO NOT BACK UP SERVICE SIDES TO WALLS, NOR PLACE IT TOO CLOSE TO OTHER EQUIPMENT TO MAKE SERVICE IMPRACTICAL. EQUIPMENT SERVICE CLEARANCE SHALL MEET MINIMUM ACCEPTABLE DISTANCE AS RECOMMENDED BY EQUIPMENT MANUFACTURER.

3.2 UTILITIES EXCAVATING AND BACKFILLING

A. PERFORM TRENCHING, EXCAVATING, BACKFILLING FOR PLUMBING WORK IN ACCORDANCE WITH THE APPROPRIATE SECTIONS AND AS SET FORTH BELOW
1. PERFORM WORK NECESSARY FOR INSTALLATION OF PLUMBING UTILITIES.
2. DEPTH OF EXCAVATION TO PROVIDE A MINIMUM OF 3' ABOVE TOP OF PIPE. EXCAVATION TO BE CARRIED TO A DEPTH OF AT LEAST 6" BELOW BOTTOM OF PIPE ELEVATION. FILL BELOW PIPE (6"), AROUND PIPE, AND A MINIMUM OF 12" ABOVE PIPE WIT SAND OR CLASS "B" CRUSHED STONE TAMPED FIRM AND EVEN. SEPARATE TOPSOIL DURING EXCAVATION. FINAL LAYER OR DIRT (12" MINIMUM) TO BE TOPSOIL. TRENCHES TO BE AT LEAST 18" WIDER THAN PIPE WITH BATTER BOARDS PLACED EVERY 25'. BACKFILLING SHALL BE DONE TO EXCLUDE USE OF ROCK OR STONE ABOVE SAND OR CRUSHED STONE.

3.3 CUTTING AND PATCHING

A. REPAIR OR REPLACE ROUTINE DAMAGE CAUSED BY CUTTING IN PERFORMANCE OF CONTRACT.

B. PERFORM REPAIRS WITH MATERIALS WHICH MATCH EXISTING AND INSTALL IN ACCORDANCE WITH THE APPROPRIATE SECTION OF THESE SPECIFICATIONS OR THE BEST STANDARDS OF THE INDUSTRY.

3.4 CONNECTION TO EQUIPMENT

A. CONNECT OR INSTALL EQUIPMENT SHOWN ON MECHANICAL DRAWINGS THAT REQUIRE PLUMBING
1. ROUGH – IN PIPING AND CONNECT EQUIPMENT
2. PROVIDE PIPING, SHUTOFF VALVES, AND UNIONS REQUIRED FOR A COMPLETE INSTALLATION.

3.5 SERVICE OF SYSTEM

A. EMPLOY COMPETENT, QUALIFIED PERSONNEL IN OPERATION OF THE EQUIPMENT.

B. PROVIDE FOR PROPER OPERATION AND CLEANLINESS.

END OF SECTION

SECTION 2
PLUMBING

PART 1 – GENERAL

1.1 SCOPE OF WORK

A. FURNISHING OF ALL LABOR, MATERIALS, TOOLS, TRANSPORTATION, SERVICE, AND RELATED ITEMS NECESSARY TO COMPLETE THE INSTALLATION OF THE PLUMBING SYSTEM AS ILLUSTRATED ON THE DRAWING AND AS INCLUDING BUT NOT LIMITED TO THE FOLLOWING:
1. HOT & COLD WATER SYSTEM WITH COMPLETE CONNECTIONS FROM METER TO ALL PLUMBING FIXTURES & EQUIPMENT REQUIRING WATER CONNECTIONS
2. SOIL, WASTE, VENT AND CONDENSATE SYSTEM LINES INSIDE AND OUTSIDE THE BUILDING.
3. TRENCHING AND BACKFILLING.
4. FINAL PLUMBING CONNECTIONS TO HEATING AND AIR CONDITIONING EQUIPMENT.
5. GAS PIPING TO HEATING, WATER HEATERS AND ALL OTHER GAS BURNING EQUIPMENT.

PART 2 – PRODUCTS

2.1 DESCRIPTION

A. ALL SOIL, WASTE, AND VENT PIPING TO BE STANDARD WEIGHT COATED CAST IRON AND NEOPRENE GASKET BANDED FITTINGS. IT SHALL BE THE RESPONSIBILITY OF THE PLUMBER TO VERIFY ALL FIRE RATED WALLS AND CONSTRUCTION AS SHOWN ON THE ARCHITECTURAL DRAWINGS AND COORDINATE WITH THE GENERAL CONTRACTOR. ALL SOIL, WASTE AND VENT SHALL BE INSTALLED AS PER CPC AND LOCAL CODES.

B. HOT & COLD WATER PIPING ABOVE FLOOR: TYPE "L" COPPER, HARD DRAWN. BELOW GROUND OUTSIDE OF BUILDING: TYPE "K" SOFT DRAWN COPPER TUBING WITH OUT JOINTS. REAM ALL JOINTS AND ENDS.

C. CONDENSATE DRAIN PIPING: TYPE "M" COPPER WITH 95–5 TIN ANTIMONY SOLDER AND WROUGHT COPPER FITTINGS OR AS APPROVED BY LOCAL AUTHORITY. HIGH EFF CONDENSING UNITS TO BE PVC AS RECOMMEND BY THE MANUFACTURE.

D. INDIRECT WASTE PIPING: TYPE "M" COPPER WITH 95–5 TIN ANTIMONY SOLDER AND WROUGHT COPPER FITTINGS OR P.V.C. SCHEDULE 40, AS APPROVED BY LOCAL AUTHORITY.

E. UNDERGROUND GAS PIPING: SCHEDULE 40 BLACK STEEL PIPE WITH LONG RADIUS STEEL WELDING FITTINGS INCLUDING CATHODIC PROTECTION OR POLYETHYLENE AS APPROVED BY LOCAL GAS COMPANY AND AUTHORITY HAVING JURISDICTION. INSTALLATION OF GAS SERVICE PIPING IN VENTED CONDUIT AND MEETING WITH THE LOCAL GAS COMPANY'S APPROVAL. GAS PIPING UNDERGROUND, BENEATH BUILDING, SHALL BE IN AN APPROVED CONDUIT DESIGNED TO WITHSTAND THE SUPERIMPOSED LOADS. CONDUIT TO BE VENTED TO OUTSIDE. INSTALL AS PER 2013 C.P.C. SEC. 1211.1.6 GAS PIPING UNDER CONCRETE WALK WAYS SHALL BE SLEEVED. SLEEVE DESIGNED TO WITHSTAND THE SUPERIMPOSED LOADS.

F. GAS PIPING ABOVE GROUND: SCHEDULE 40 BLACK STEEL WITH 125 POUND BLACK MALLEABLE IRON SCREWED FITTINGS. GAS PIPING COMPOUND AT JOINTS IN COMPLIANCE WITH NFPA BULLETIN #45 AND LOCAL APPLICABLE CODES AND SUITABLE FOR NATURAL GAS SERVICE. INSTALL MOISTURE TRAPS ON HVAC UNITS, WATER HEATERS, AND KITCHEN EQUIPMENT

G. STORM PIPING BELOW GROUND: STANDARD WEIGHT COATED CAST IRON PIPE AND STAINLESS STEEL/ NEOPRENE GASKET FITTING, OR A.B.S. OR P.V.C. SCHEDULE 40. AS APPROVED BY LOCAL AUTHORITY IN CONCEALED LOCATIONS.

H. STORM PIPING ABOVE GROUND: STANDARD WEIGHT COATED CAST IRON PIPE AND STAINLESS STEEL/ NEOPRENE GASKET FITTING, OR A.B.S. OR P.V.C. SCHEDULE 40, AS APPROVED BY LOCAL AUTHORITY.

I. TRAPS AND VENTS FOR SERVICE SINK: A.B.S. OR P.V.C. SCHEDULE 40, AS APPROVED BY LOCAL AUTHORITY.

2.2 INSULATION

A. INSULATE ALL HOT AND COLD WATER COPPER PIPING WITH AT LEAST 1" THICK FOAM RUBBER OR FOIL FACE FIBERGLASS PIPE INSULATION OUTSIDE OF BUILDING INSULATION ENVELOPE. WRAP WITH XL-HEAT TRACE TAPE SYSTEM OUTSIDE OF BUILDING INSULATION ENVELOPE

2.3 FIXTURES

A. ALL FIXTURES: AS INDICATED ON DRAWINGS WITH EQUAL PRODUCTS FURNISHED BY AMERICAN STANDARD, KOHLER, ELJER OR EQUAL.

2.4 CLEANOUTS, FLOOR DRAINS, FLOOR SINKS, AND ROOF DRAINS.

A. ALL ACCESSORIES, AS INDICATED ON DRAWING WITH EQUAL PRODUCTS FURNISHED BY SMITH, WADE, JOSAM, OR ZURN BEING ACCEPTABLE.

2.5 EQUIPMENT

A. SHUTOFF VALVES UNDERNEATH LAVATORIES, TANK TYPE WATER CLOSETS, AND KITCHEN EQUIPMENT WITH CHROME PLATED ANGLE STOP VALVES WITH CHROME PLATED ESCUTCHEON PLATES.
B. HOSE BIBBS – AS SCHEDULED ON DRAWINGS.
C. VACUUM BREAKERS – AS SCHEDULED ON DRAWINGS.
D. BACKFLOW PREVENTERS – AS SCHEDULED ON DRAWINGS.
E. GAS COCK – PLUG VALVE IRON BODY, BRONZE TAPERED PLUG, LUBRICATED, THREADED ENDS. RATED FOR 200 CWP, AGA AND UL LISTED.

PART 3 – INSTALLATION

3.1 PIPING

A. RUN ALL PIPING CONCEALED EXCEPT WHERE OTHERWISE INDICATED ON DRAWINGS.
B. INSTALL VALVES TRAPS CLEANOUT AND OTHER APPARATUS IN AN EASILY ACCESSIBLE LOCATION
C. INSTALL SOIL, WASTE VENT OFFSETS AND CONDENSATE DRAINS WITH A MINIMUM UNIFORM GRADE OF ONE QUARTER INCH TO THE FOOT.
D. MAINTAIN HOT AND COLD WATER LINES AT LEAST 6 INCHES APART WHERE PIPING IS PARALLEL.
E. PROVIDE ESCUTCHEON PLATES WHERE ALL PIPES PASS THROUGH A FINISHED WALL.
F. PROVIDE FIRE RATED PENETRATION WHERE ALL PIPES PASS THROUGH A FIRE RATED WALL.

3.2 HANGERS AND SUPPORTS

A. SUPPORT COPPER PIPING AT INTERVALS NOT TO EXCEED SEVEN FEET ZERO INCHES AND AT EACH CHANGE IN HORIZONTAL OR VERTICAL DIRECTION.

3.3 PLUMBING FIXTURES

A. FURNISH AND INSTALL ALL PLUMBING FIXTURES COMPLETE WITH ALL EQUIPMENT FITTINGS, TRIMMING, AND ACCESSORIES.
B. ALL FIXTURES: GRADE A, WHITE.
C. EXPOSED PIPING TO FIXTURES: A PRODUCT OF THE FIXTURE MANUFACTURE.
D. PROVIDE STOPS AS MANUFACTURED BY THE FIXTURE MANUFACTURER, WITH METAL – TO – SEAT FOR ALL FIXTURES AND EQUIPMENT.

3.4 TEST

A. THE PLUMBING SYSTEM AND ASSOCIATED SYSTEM IS SUBJECT TO FINAL APPROVAL OF THE OWNER'S REPRESENTATIVE AND CODE AUTHORITIES HAVING JURDICTION. PERFORM ALL TESTS REQUIRED TO SHOW CODE COMPLIANCE AS DIRECTED.

3.5 CLEANING AND PROTECTION

A. AFTER THE PLUMBING PIPING HAS BEEN INSTALLED, INSPECTED, AND APPROVED, FLUSH THE PIPING SYSTEM TO REMOVED ANY FOREIGN MATTER FROM THE PIPES.

1. DISINFECT ALL DOMESTIC WATER PIPING SYSTEMS, HOT & COLD WITH CHLORINE SOLUTION AND THOROUGHLY FLUSH BEFORE USE. DISINFECTANT TO BE AQUEOUS SOLUTION OF CHLORINE GAS OR OF SODIUM OR CALCIUM HYPOCHLORITE.

2. TEST TO BE PERFORMED IN COOPERATION WITH REPRESENTATIVE OF THE LOCAL HEALTH DEPARTMENT HAVING JURISDICTION & WITNESSED BY A REPRESENTATIVE OF AN APPROVED LABORATORY OR THE ARCHITECT. DURING PERIOD OF TEST, SIGNS SHALL BE POSTED AT EACH WATER OUTLET STATING "CHLORINATION – DO NOT DRINK".

3. PROCEDURE: SYSTEMS TO BE THOROUGHLY FLUSHED WITH WATER AT CITY PRESSURE. AFTER FLUSHING, ALL OUTLETS SHALL BE OPENED TO ALLOW A SLOW TRICKLE OF WATER. CHLORINE SOLUTION SHALL BE NEAR CITY CONNECTION. PUMPING TO CONTINUE UNTIL AN ORTHO– TOLUENE TEST AT EACH OUTLET SHOWS CHLORINE CONCENTRATION 50 PPM. SHUT ALL OUTLETS AND CITY SERVICE, MAINTAINING CHLORINE IN SYSTEM FOR 24 HOUR PERIOD.

4. AT END OF PERIOD, TEST E

WASTE & VENT KEYNOTES

(THIS SHEET ONLY)

1. UNDER SLAB PLUMBER TO STUB OUT SEWER 5'-0" BEYOND BLDG – CONNECTION BY SITE PLUMBER – VERIFY LOCATION & INVERT SEE CIVIL DWGS
2. 2-WAY 2" COTG
3. 2" VTR
4. 3/4"CONDENSATE IN WALL TO SINK – CONNECT TO SINK TAILPIECE
5. 3/4"CONDENSATE RISER IN WALL TO ATTIC
6. 2" COTG

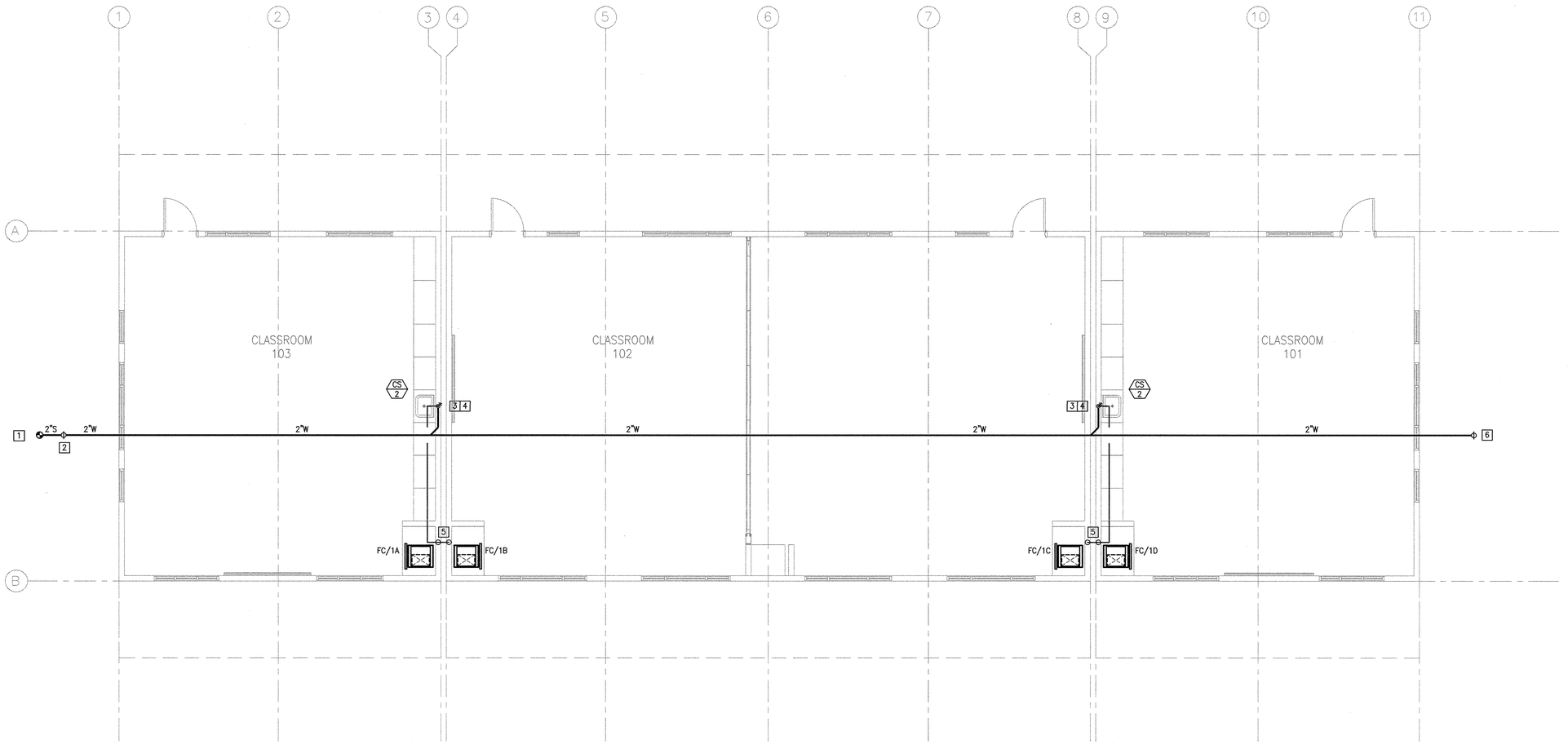

PLUMBING PLAN - WASTE & VENT
SCALE: 3/16" = 1'-0"

JTS MODULAR
DESIGN • BUILD • TRANSPORT • ENJOY
7001 MC Divitt DRIVE
BAKERSFIELD, CA 93313
WWW.JTSMODULAR.COM
OFFICE: (661) 835-9270

LICENSE #E18218
CANTELMI ENGINEERING
2130 F STREET
BAKERSFIELD, CA 93301
TEL: (661) 324-5252
FAX: (661) 324-8439
Cantelmi@Cantelmi.NET
7/16/18
REGISTERED PROFESSIONAL ENGINEER FRANK J. CANTELMI No. 21190 MECHANICAL STATE OF CALIFORNIA

REGISTERED PROFESSIONAL ENGINEER RYAN J. OMBERTSEN No. S 4437 EXP. 12/31/18 STRUCTURAL STATE OF CALIFORNIA

MONSON - SULTANA ELEMENTARY SCHOOL
CLASSROOM - SLAB ON GRADE PC (02-113899)
10643 AVENUE 416, DINUBA, CA 93618
MONSON - SULTANA JOINT UNION ELEMENTARY SCHOOL DISTRICT

IDENTIFICATION STAMP
DIVISION OF THE STATE ARCHITECT
CODE 2013 CBC

IDENTIFICATION STAMP DIV. OF THE STATE ARCHITECT
02 117009
AC PS SS
DATE 7/23/18

JTS JOB#: 06-0246
DATE: 7/16/2018

PLUMBING PLAN - WASTE & VENT

P-1.00-R

file: S:\DWGS\2018\JTS\MONSON SALTANA C18-117\C18-117_PLUMB_R2.dwg date: 7/19/2018 2:30 PM

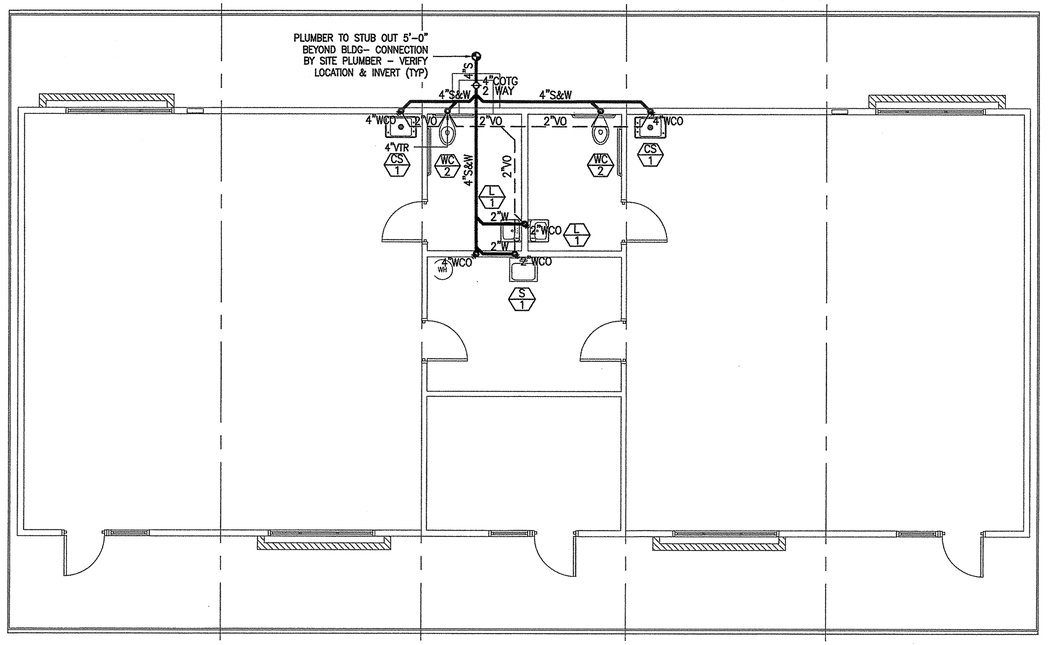

1 SOG 32 - PLUMBING WASTE/VENT PLAN - 5M RESTROOM OPTION
SCALE: 3/16" = 1'-0"

FOR REFERENCE ONLY

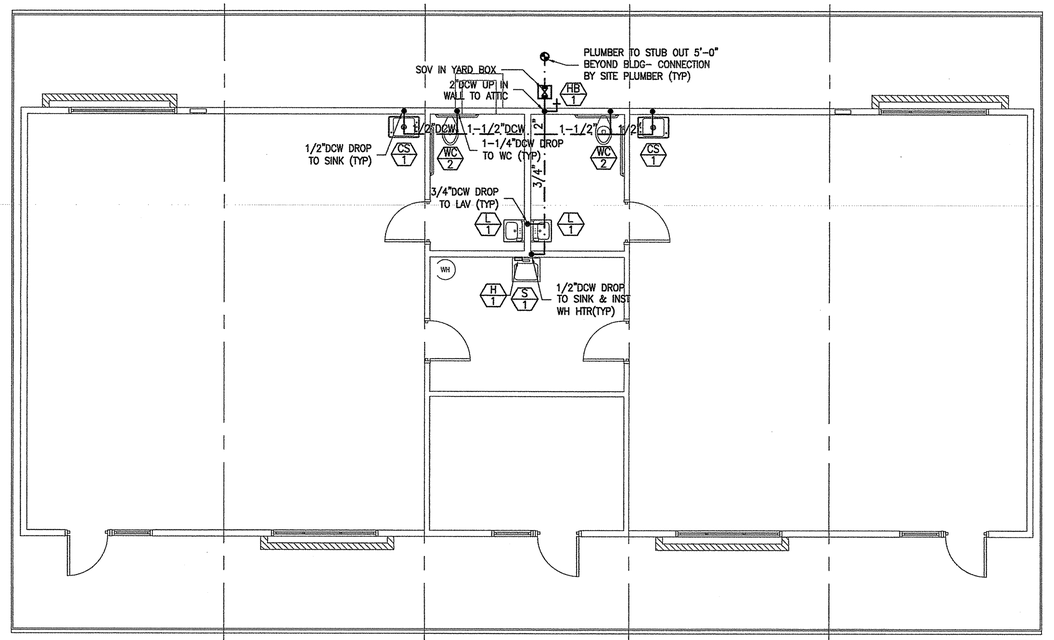

2 SOG 32 - PLUMBING DCW/DHW PLAN - 5M RESTROOM OPTION
SCALE: 3/16" = 1'-0"

IDENTIFICATION STAMP
DIV. OF THE STATE ARCHITECT
02 117009
AC FLS SS
DATE 7/23/18

JTS MODULAR
DESIGN • BUILD • TRANSPORT • ENJOY

COMMERCIAL INSTITUTIONAL AND RESIDENTIAL MODULAR BUILDINGS DESIGN & PLANNING

7001 Mc Divitt Dr.
Bakersfield, CA 93313
Office: (661) 835-9270
Plant: (661) 833-2940
Fax: (661) 847-1007
www.jtsmodular.com

LICENSE #21190
CANTELMI ENGINEERING
MECHANICAL & ELECTRICAL ENGINEERING

1800 21 STREET, SUITE C
BAKERSFIELD, CA 93301
TEL: (661) 324-5252
FAX: (661) 324-8439
Cantelmi@Cantelmi.NET

SOG-32
RE-LOCATABLE BUILDING PC

APPROVALS
IDENTIFICATION STAMP
DIV. OF THE STATE ARCHITECT
PRE CHECK (PC) DOCUMENT
CODE 2013 CBC
A SEPARATE PROJECT APPLICATION FOR CONSTRUCTION IS REQUIRED

FILE # PC-LTS
APPL 02-113899
AC — F/LS SS
DATE 3/19/15

DATE
PROJECT XX-XXX

REGISTERED PROFESSIONAL ENGINEER
FRANK J. CANTELMI
NO. 21190
REN 6-30-2015
MECHANICAL
STATE OF CALIFORNIA
C14200_MEP_REV1
02-18-15
PC

SHEET NAME
PLUMBING PLANS: 5M-RR

SHEET NUMBER
P1.01

DCW KEYNOTES

(THIS SHEET ONLY)

1. UNDER SLAB PLUMBER TO STUB OUT DCW 5'-0" BEYOND BLDG - CONNECTION BY SITE PLUMBER VERIFY LOCATION - SEE CIVIL DWGS
2. SOV IN YARD BOX.
3. 1"DCW TO RISER IN BLDG.
4. 3/4"DCW DROP TO CS/2.
5. 3/4"DCW DROP TO HB/1.

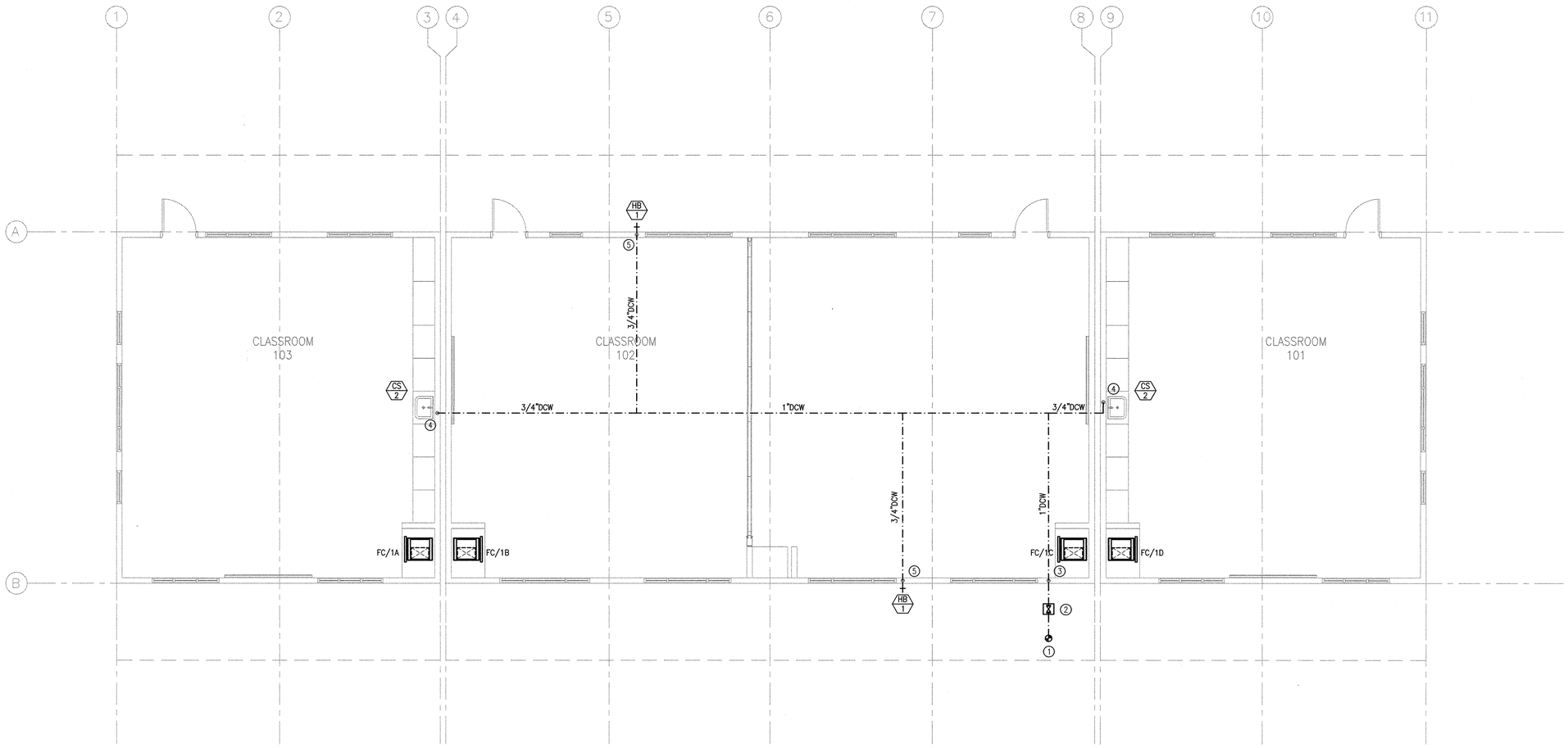

PLUMBING PLAN - DCW
SCALE: 3/16" = 1'-0"

JTS MODULAR
DESIGN • BUILD • TRANSPORT • ENJOY
7001 MC Divitt DRIVE
BAKERSFIELD, CA 93313
WWW.JTSMODULAR.COM
OFFICE: (661) 835-9270

LICENSE #E18218
CANTELMI ENGINEERING
2130 F STREET
BAKERSFIELD, CA 93301
TEL: (661) 324-5252
FAX: (661) 324-8439
Cantelmi@Cantelmi.NET
7/16/18

REGISTERED PROFESSIONAL ENGINEER FRANK J. CANTELMI No. 21190 MECHANICAL STATE OF CALIFORNIA

REGISTERED PROFESSIONAL ENGINEER RYAN J. OMER No. S 4437 EXP. 12/31/18 STRUCTURAL STATE OF CALIFORNIA

MONSON - SULTANA ELEMENTARY SCHOOL
CLASSROOM - SLAB ON GRADE PC (02-113899)
10643 AVENUE 416, DINUBA, CA 93618
MONSON - SULTANA JOINT UNION ELEMENTARY SCHOOL DISTRICT

IDENTIFICATION STAMP
DIVISION OF THE STATE ARCHITECT
CODE 2013 CBC

IDENTIFICATION STAMP DIV. OF THE STATE ARCHITECT
02 117009
AC FLS SS
DATE 7/23/18

JTS JOB#: 06-0246
DATE: 7/16/2018

PLUMBING PLAN - DCW

P-2.00-R

file: S:\DWGS2018\JTS\MONSON SALTANA C18-117\C18-117_PLUMB_R2.dwg date: 7/16/2018 2:30 PM

PLUMBING FIXTURE SCHEDULE

MARK	FIXTURE	DCW	DHW	S&W	TRAP	VENT	DESCRIPTION
CS 2	CLASSROOM SINK	3/4"	–	2"	1-1/2"	2"	JUST #CRA-ADA-1931-A-GR 31"x19" SINGLE COMPARTMENT TYPE 304 STAINLESS STEEL SINK – CHICAGO #350-E35ABCP GOOSENECK SPOUT – HAWS #5054LF DRINKING FOUNTAIN – WALL STOP w/ FLEX RISER – 1-1/2" 'P' TRAP

NOTE:

ALL PLUMBING FIXTURES SHALL MEET 2016 CALGREEN MANDATORY MEASURES MAXIMUM FLOW RATE AT 20% REDUCTION PER TABLE 5.303.2.3

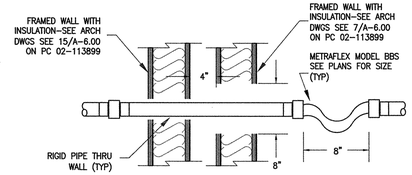

1 FLEX. CONNECTION @ BLDG MODULE - TYP. NTS

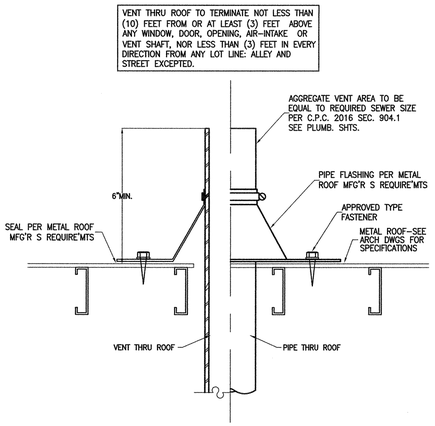

2 VENT/PIPE THRU ROOF - TYP. NTS

JTS MODULAR
DESIGN • BUILD • TRANSPORT • ENJOY
7001 MC Divitt DRIVE
BAKERSFIELD, CA 93313
WWW.JTSMODULAR.COM
OFFICE: (661) 835-9270

LICENSE #E18218
CANTELMI ENGINEERING
2130 F STREET
BAKERSFIELD, CA 93301
TEL: (661) 324-5252
FAX: (661) 324-8439
Cantelmi@Cantelmi.NET
7/16/18





MONSON - SULTANA ELEMENTARY SCHOOL
CLASSROOM - SLAB ON GRADE PC (02-113899)
10643 AVENUE 416, DINUBA, CA 93618
MONSON - SULTANA JOINT UNION ELEMENTARY SCHOOL DISTRICT

IDENTIFICATION STAMP
DIVISION OF THE STATE ARCHITECT
CODE 2013 CBC

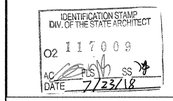

JTS JOB#: 06-0246
DATE: 7/16/2018

PLUMBING DETAILS

P-5.01-R

file: S:\DWGS2018\JTS\MONSON SALTANA C18-117\C18-117_PLUMB_R2.dwg date: 7/16/2018 2:30 PM

PLUMBING FIXTURE SCHEDULE

MARK	FIXTURE	DCW	DHW	S&W	TRAP	VENT	DESCRIPTION
WC 1	WATER CLOSET	1 1/4"	–	4"	INT.	2"	ZURN #Z5615–BWL HET ELONGATED WALL HUNG – ECOVANTAGE FLUSH VALVE TOILET SYSTEM – VITREOUS CHINA – 1.28 GPF – ELONGATED OPEN FRONT SEAT – BOLT CAP KIT – ZURN #Z6000PL–HET MANUAL FLUSH VALVE – ZURN #Z1212 WALL CLOSET SUPPORT SYSTEM – SHALL MEET CALGREEN STANDARDS
WC 2	ACCESSIBLE TOILET ♿	1 1/4"	–	4"	INT.	2"	ZURN #Z5615–BWL HET ELONGATED WALL HUNG – ECOVANTAGE FLUSH VALVE TOILET SYSTEM – VITREOUS CHINA – 1.28 GPF – ELONGATED OPEN FRONT SEAT – BOLT CAP KIT – ZURN #Z6000PL–HET MANUAL FLUSH VALVE – ZURN #Z1212 WALL CLOSET SUPPORT SYSTEM – SHALL MEET CALGREEN STANDARDS – SEE ARCHITECTURAL DETAIL FOR ADA COMPLIANT MOUNTING HEIGHT
UR 1	URINAL	1"	–	2"	INT.	2"	ZURN #Z5738.207.00 SMALL PINT ECOVANTAGE URINAL – VITREOUS CHINA – WALL MOUNTED – .125 GPF – ZURN #Z6003PL–ULF MANUAL FLUSH VALVE – SHALL MEET CALGREEN STANDARDS – SEE ARCHITECTURAL DETAIL FOR ADA COMPLIANT MOUNTING HEIGHT
L 1	LAVATORY ADA	1/2"	–	2"	1–1/4"	2"	KOHLER "KINGSTON" #K–2005 LAVATORY– WALL MTD – VITREOUS CHINA – COLD WATER METERING FAUCET CHICAGO #3400–ABCP – .25 GPC, MIN. 10 SEC. CYCLE TIME, MAX. 5LB ACTIVATION – MCGUIRE #155A GRID DRAIN – (1)ANGLE WALL STOP W/ FLEX RISER – 1¼" 'P'TRAP – WALL FIXTURE SUPPORT– VERIFY HOLE DRILLING FOR FAUCET – LAVATORY SHALL BE ADA COMPLIANT & MEET CALGREEN MAX. .4 GPM FLOW RATE (OR EQUAL)
L 2	LAVATORY ADA	1/2"	1/2"	2"	1–1/4"	2"	KOHLER "KINGSTON" #K–2005 LAVATORY– WALL MOUNTED – VITREOUS CHINA – HOT & COLD WATER METERING FAUCET CHICAGO #3300–ABCP – .25 GPC, MIN. 10 SEC. CYCLE TIME, MAX. 5LB ACTIVATION – GRID STRAINER – (2)ANGLE WALL STOP W/ FLEX RISERS– 1¼" 'P' TRAP– WALL FIXTURE SUPPORT – INSULATE HOT WATER SUPPLY & 'P' TRAP– VERIFY HOLE DRILLING FOR FAUCET – LAVATORY SHALL BE ADA COMPLIANT – FAUCET SHALL MEET CALGREEN MAX. .4 GPM FLOW RATE (OR EQUAL)
CS 1	CLASSROOM SINK	3/4"	–	2"	1–1/2"	2"	JUST CRA–ADA–1931–A–GR – 18"x31"x6.5" – SINGLE COMPARTMENT TYPE 304 STANLESS STEEL SELF–RIMMING SINK W/ 3 1/2" CRUMB CUP – STAINLESS STEEL DRAIN – CHICAGO 350 GOOSENECK SPOUT – HAWS 5054LF DRINKING FOUNTAIN – P–TRAP W/ ESCUTCHEON – SPEEDWAY COMPRESSION WALLSTOP & SUPPLY TUBING
MS 1	MOP SINK	3/4"	3/4"	3"	3"	2"	ZURN Z5850 FLOOR MTD MOP SINK – 28"x28"x 8" CURB – ZURN ZB43M1–XL FAUCET W/ VACUUM BREAKER – LOOSE KEY STOPS – LEVER HANDLES – INTEGRAL SHANK–STOPS & RUBBER HOSE W/ HOSE HOOK
WH 1	WATER HEATER	3/4"	3/4"	–	–	–	A.O. SMITH #DSE5–10 ELECTRIC WATER HEATER 10 GAL –WALL MOUNTED– 6 kw – 28.8 FLA @208v/1ø (VERIFY SITE VOLTAGE PRIOR TO ORDERING) – W/ AMTROL T–5 THERMAL EXPANSION TANK TO BE PRE–CHARGED @ FACTORY PRESSURE RELIEF VALVE – 188 lbs OPERATING WEIGHT (OR EQUAL)
HB 1	HOSE BIBB	3/4"	–	–	–	–	ACORN 8160 – NON–FREEZE INTEGRAL VACUUM BREAKER – DUAL CHECK HYDRANT – RECESSED HOSE BOX – 304 SS BOX W/ LOCKING DOOR – 1/4TURN CERAMIC FULL FLOW VALVE W/ WHEEL HANDLE & SCREW DRIVER OPERATED STOP
FD 1	FLOOR DRAIN	–	–	2"	2"	2"	JR SMITH #2005–A FLOOR DRAIN – 5"ø CHROME PLATED GRATE – DOUBLE DRAINAGE FLANGE – NO HUB OUTLET – TRAP PRIMER CONNECTION
SA 1	SHOCK ABSORBER	–	–	–	–	–	ZURN Z1700 – SERIES SIZED PER MANUFACTURER'S REQUIREMENTS
H 1	INSTANT ELECTRIC HEATER	1/2"	1/2"	–	–	–	EEMAX #SP4208 SINGLE POINT ELECTRIC TANKLESS WATER HEATER – .5 GPM – OUTLET TEMPERATURE 105°–110° – BRAIDED STAINLESS STEEL FLEX CONNECTORS – 4.1KW – 19.7 AMPS @ 208v/1ø (OR EQUAL)

NOTE:

ALL PLUMBING FIXTURES SHALL MEET 2013 CALGREEN MANDATORY MEASURES MAXIMUM FLOW RATE AT 20% REDUCTION PER TABLE 5.303.2.3

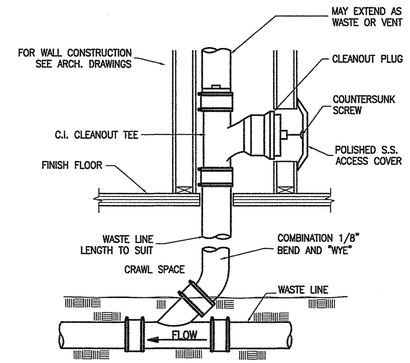

4 WALL CLEANOUT - TYP. NTS

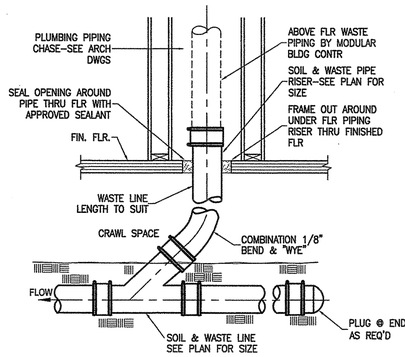

1 S&W PIPE RISER THRU FLR - TYP. NTS

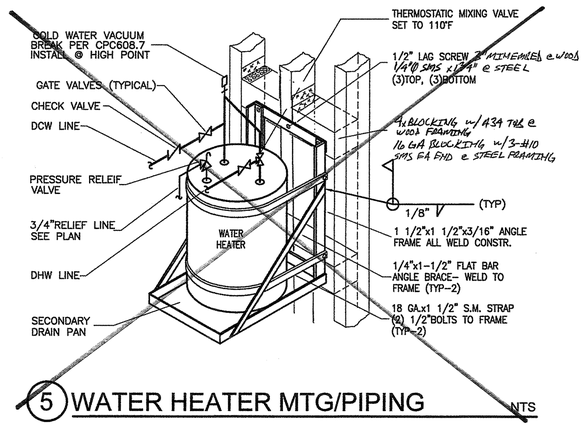

5 WATER HEATER MTG/PIPING NTS

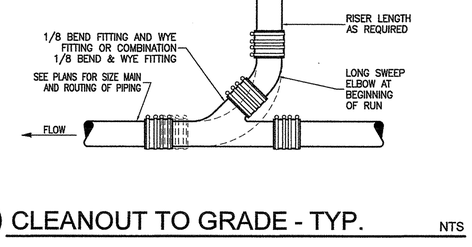

2 CLEANOUT TO GRADE - TYP. NTS

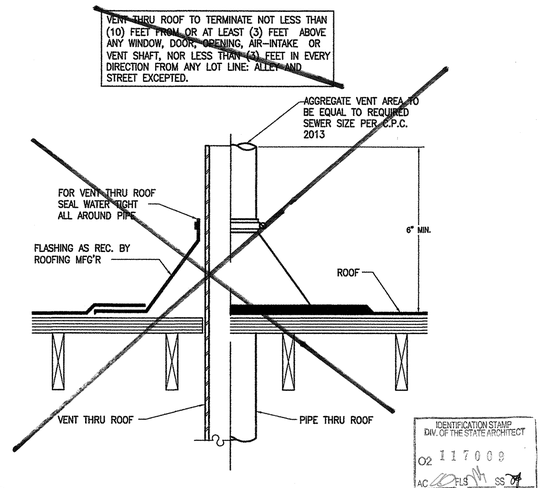

IDENTIFICATION STAMP DIV. OF THE STATE ARCHITECT
02 117009
AC FLS SS
DATE 7/23/15

3 VENT/PIPE THRU ROOF - TYP. NTS

JTS MODULAR
DESIGN • BUILD • TRANSPORT • ENJOY

COMMERCIAL INSTITUTIONAL AND RESIDENTIAL MODULAR BUILDINGS DESIGN & PLANNING

7001 Mc Divitt Dr.
Bakersfield, CA 93313
Office: (661) 835-9270
Plant: (661) 833-2940
Fax: (661) 847-1007
www.jtsmodular.com

LICENSE #21190
CANTELMI ENGINEERING
MECHANICAL & ELECTRICAL ENGINEERING
1800 21 STREET, SUITE C
BAKERSFIELD, CA 93301
TEL: (661) 324–5252
FAX: (661) 324–8439
Cantelmi@Cantelmi.NET

SOG-32
RE-LOCATABLE BUILDING PC

APPROVALS

IDENTIFICATION STAMP
DIV. OF THE STATE ARCHITECT

PRE CHECK (PC) DOCUMENT
CODE 2013 CBC
A SEPARATE PROJECT APPLICATION FOR CONSTRUCTION IS REQUIRED

FILE # PC-15
APPL# 11-3299
AC FLS SS
DATE 3/19/15

DATE

PROJECT XX-XXX

REGISTERED PROFESSIONAL ENGINEER
FRANK J. CANTELMI III
NO. 21190
REN 6-30-2015
MECHANICAL
STATE OF CALIFORNIA
C14200 MEP REV1
PC

02–18–15

SHEET NAME
PLUMBING SCHEDULE & DETAILS

SHEET NUMBER
P5.01

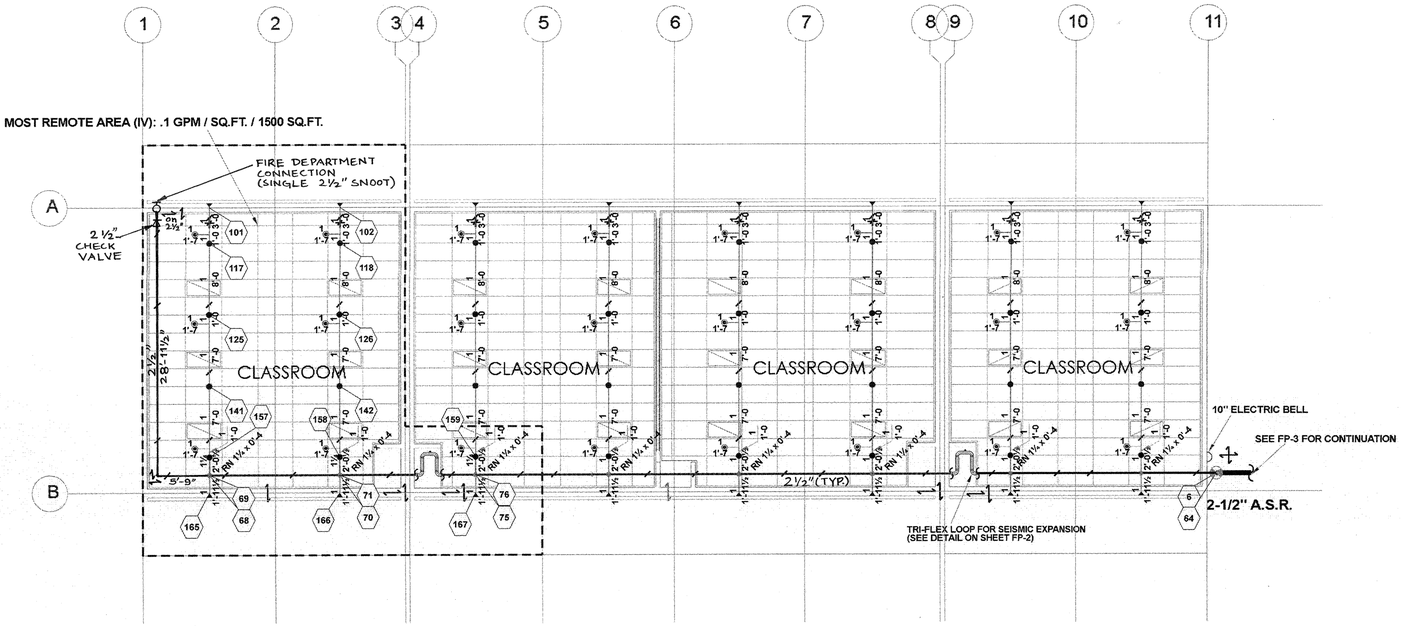

FIRE SPRINKLER PLAN
SCALE: 1/8" = 1'-0

2 1 0 4 8
SCALE 1/8"=1'-0"

Sprinkler Legend											
Symbol	Manufacturer	SIN	Model	Quantity	K-Factor	Type	Size	Response	Finish	Temperature	Note
▶	Viking	VK305		16	5.6	Sidewall	½	Quick	Chrome	155°F	
◉	Viking	VK302		24	5.6	Pendent	½	Quick	Chrome	155°F	
●	Viking	VK300		32	5.6	Upright	½	Quick	Brass	200°F	
				Total = 72							

MAIN ELEVATION: 9'-1" FF-C, 1'-10 D-C, 1'-0 J-C, 0'-6 B-C TYP. UNO
MAIN HANGERS: #10 (1'-2) TYP. UNO

LINE ELEVATION: FF-C VARIES, 1'-4 D-C, 0'-6 J-C THIS AREA
LINE HANGERS: #10 (0'-9) THIS AREA

HYDRAULIC --- SYSTEM	
This building is protected by a Hydraulically Designed Automatic Sprinkler System.	
Location... MONSON SULTANA	
No. Of Sprinklers...	14
Basis Of Design	LIGHT HAZARD
1. Density...	.1 gpm/sq.ft.
2. Designed Area Of Discharge...	1500 SQ.FT.
System Demand	
1. GPM Discharge...	307.2 gpm
2. Residual Pressure At The Base Of The Riser	64.8 p.s.i.

Table 9.3.6.4(a) Maximum Spacing (ft) of Steel Branch Line Restraints

Pipe (in.)	Seismic Coefficient (C_p)		
	$C_p \leq 0.50$	$0.5 < C_p \leq 0.71$	$C_p > 0.71$
1	43	36	26
1¼	46	39	27
1½	49	41	29
2	53	45	31

Table 9.3.5.9.3 Seismic Coefficient Table

S_s	C_p	S_s	C_p
0.33 or less	0.35	2.2	1.03
0.4	0.38	2.3	1.07
0.5	0.4	2.4	1.12
0.6	0.42	2.5	1.17
0.7	0.42	2.6	1.21
0.8	0.44	2.7	1.26
0.9	0.48	2.8	1.31
1	0.51	2.9	1.35
1.1	0.54	3	1.4
1.2	0.57	3.1	1.45

Ss = .516 ⟹ **Cp = .5 USED FOR SEIMIC CALCULATIONS PER NFPA 13 2016 TABLE 9.3.5.9.3**

BRANCH LINE RESTRAINT MAX. SPACING: 43'-0 PER NFPA 13 2016 TABLE 9.3.6.4(a)

NOTE:
1. 2½" ENLARGED EDDY FLOW STAINLESS STEEL OVERHEAD. PIPE.
2. 1" EDDY THREAD 40 STAINLESS STEEL OVERHEAD PIPE.

FIRE SPRINKLER CONTRACTOR CONTROL FIRE PROTECTION, INC. C-16 #534644 STATE OF CALIFORNIA

JTS MODULAR
DESIGN BUILD TRANSPORT ENJOY
7001 MC Divitt DRIVE
BAKERSFIELD, CA 93313
WWW.JTSMODULAR.COM
OFFICE: (661) 835-9270

STRUCTURAL ENGINEER OF RECORD
ORION
Structural Engineering, Inc.
12257 OLD POMERADO ROAD, SUITE A
POWAY, CA 92064
PHONE (858) 679-1974
FAX (858) 679 1975

REGISTERED PROFESSIONAL ENGINEER RYAN J. OMAR No. S 4435 EXP. 12/31/19 STRUCTURAL STATE OF CALIFORNIA

MONSON-SULTANA ELEMENTARY
RELOCATABLE CLASS ROOM BUILDING
10643 AVENUE 416
SULTANA, CA 93666

IDENTIFICATION STAMP
DIVISION OF THE STATE ARCHITECT
CODE 2016 CBC

APPL # 02-117009
FILE # 54-62
AC FLS SS
DATE 7/23/18

JTS JOB#:
DATE: 01/27/2018

FIRE SPRINKLER PLAN

FP-1

GENERAL NOTES:
A. IT IS THE RESPONSIBILITY OF THE OWNER TO PROPERLY MAINTAIN THE FIRE PROTECTION SYSTEM IN AN OPERABLE CONDITION AT ALL TIMES.
B. THE FIRE PROTECTION CONTRACTOR WILL PROVIDE THE OWNER WITH THE NECESSARY INSTRUCTION MANUALS FOR THE UPKEEP OF THE SYSTEM, AS WELL AS A COPY OF N.F.P.A. 25.
C. ONLY NEW SPRINKLERS SHALL BE EMPLOYED IN THE INSTALLATION OF THE SPRINKLER SYSTEM.
D. THE SYSTEM SHALL ONLY EMPLOY THE USE OF APPROVED MATERIALS AND DEVICES.
E. SPRINKLER PLANS SHALL BE APPROVED PRIOR TO THE INSTALLATION OF ANY PIPE. A SET OF APPROVED PLANS SHALL BE MAINTAINED AT ALL TIMES ON THE JOB SITE.
F. AN APPOINTMENT SHALL BE MADE A MINIMUM OF TWO WORKING DAYS IN ADVANCE, WITH THE APPROPRIATE FIRE PREVENTION DIVISION REGIONAL OFFICE FOR ALL INSPECTIONS AND TESTS.
G. ALL UNDERGROUND MAINS AND LEAD-IN CONNECTIONS SHALL BE FLUSHED, AS INDICATED IN NFPA PRIOR TO CONNECTING TO THE OVERHEAD PIPING. THE FLUSHING SHALL CONTINUE UNTIL THE WATER IS CLEAR. FLUSHING SHOULD BE PERFORMED AT THE TIME OF THE HYDROSTATIC TEST, AND SHALL BE WITNESSED BY A FIRE PREVENTION DIVISION INSPECTOR.
H. SYSTEM PIPING SHALL BE HYDROSTATICALLY TESTED AT 200 PSI FOR TWO HOURS OR AT 50 PSI ABOVE THE MAXIMUM SYSTEM OPERATING PRESSURE, WHICHEVER IS GREATER.
I. FIRE DEPARTMENT CONNECTIONS SHALL BE LOCATED ON THE ADDRESS SIDE OF THE BUILDING, FACE THE STREET, BE VISIBLE AND ACCESSIBLE, HAVE NTS FEMALE INLETS, HAVE PROTECTIVE CAPS, AND AN ACCESSIBLE, APPROVED CHECK VALVE LOCATED IN THE MAIN LINE (AS CLOSE TO THE INLETS AS POSSIBLE).
J. ALL VALVES AND FIRE DEPARTMENT CONNECTIONS SHALL HAVE A PERMANENTLY AFFIXED SIGNS, INDICATING THEIR FUNCTION.
K. A STOCK OF SPARE SPRINKLERS OF EACH STYLE, TYPE, AND TEMPERATURE RATING ALONG WITH A SPRINKLER WRENCH SHALL BE LOCATED AT THE MAIN RISER.
L. ANY PORTION OF THIS SPRINKLER SYSTEM EXPOSED TO FREEZING TEMPERATURES SHALL BE ADEQUATELY PROTECTED. (HEAT TAPE IS NOT AN ACCEPTABLE METHOD OF PROTECTION).
M. WELDING SHALL BE PERFORMED PER NFPA 13 REQUIREMENTS.
N. AUTOMATIC SPRINKLER SYSTEMS SHALL BE SUPERVISED BY A LISTED/APPROVED CENTRAL, PROPRIETARY, OR REMOTE STATION, OR A LOCAL ALARM WHEN APPROVED BY THE CHIEF, WHICH WILL GIVE AN AUDIBLE SIGNAL AT A CONSTANTLY ATTENDED LOCATION WHEN THE NUMBER OF SPRINKLERS IS 100 OR MORE.

OCCUPANCY CLASSIFICATION: LIGHT HAZARD
CONSTRUCTION TYPE: COMBUSTIBLE OBSTRUCTED

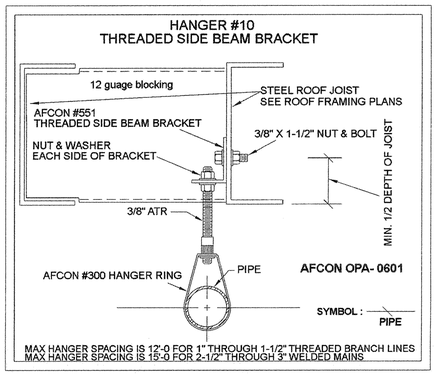

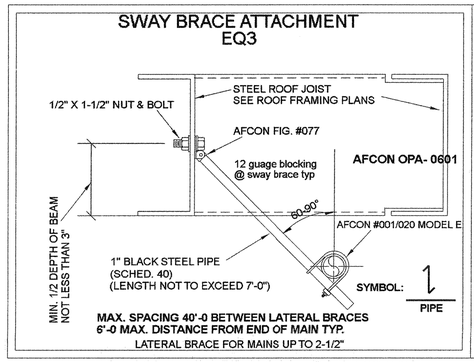

NOTE: SEISMIC BRACING CALCULATIONS PROVIDED WITH PRODUCT DATA & HYDRAULIC CALCULATIONS SUBMITTAL TYP.

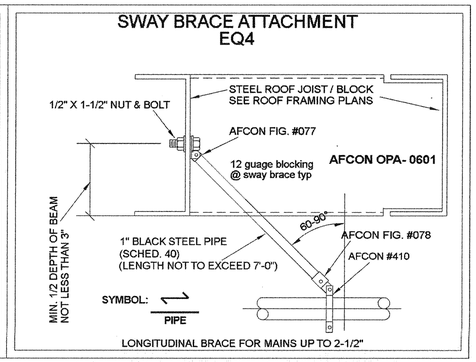

NOTE: SEISMIC BRACING CALCULATIONS PROVIDED WITH PRODUCT DATA & HYDRAULIC CALCULATIONS SUBMITTAL TYP.

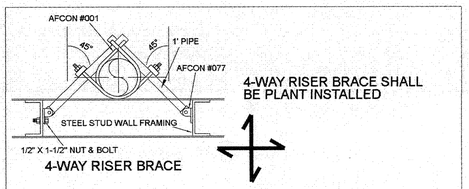

4-WAY RISER BRACE SHALL BE PLANT INSTALLED

4-WAY RISER BRACE

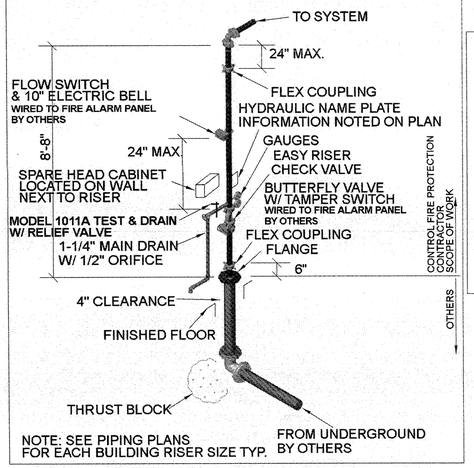

NOTE: SEE PIPING PLANS FOR EACH BUILDING RISER SIZE TYP.

RISER DETAIL NTS (INTERIOR)

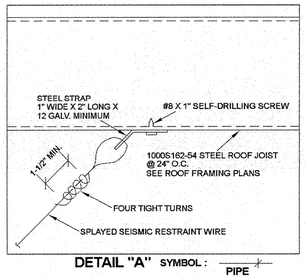

DETAIL "A" SYMBOL : PIPE

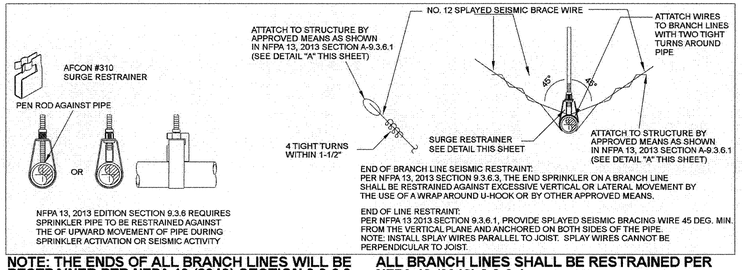

NOTE: THE ENDS OF ALL BRANCH LINES WILL BE RESTRAINED PER NFPA 13 (2013) SECTION 9.3.6.3

ALL BRANCH LINES SHALL BE RESTRAINED PER NFPA 13 (2013) 9.3.6.4

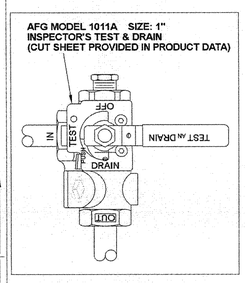

INSPECTOR'S TEST DETAIL NTS

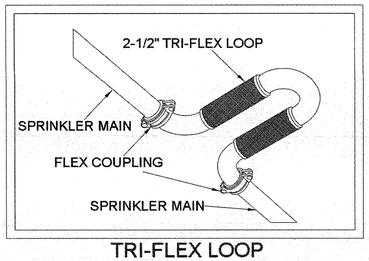

TRI-FLEX LOOP

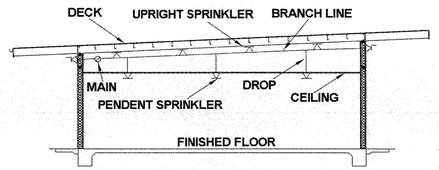

CROSS SECTION THROUGH LINE X-X NTS

WALL LEGEND:
NOTE: BLDG E & G INTERIOR WALLS ARE FIRE RATED

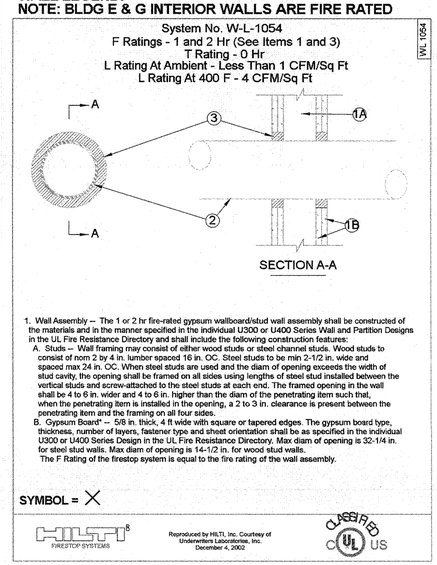

1. Wall Assembly -- The 1 or 2 hr fire-rated gypsum wallboard/stud wall assembly shall be constructed of the materials and in the manner specified in the individual U300 or U400 Series Wall and Partition Designs in the UL Fire Resistance Directory and shall include the following construction features:
   A. Studs -- Wall framing may consist of either wood studs or steel channel studs. Wood studs to consist of nom 2 by 4 in. lumber spaced 16 in. OC. Steel studs to be min 2-1/2 in. wide and spaced max 24 in. OC. When steel studs are used and the diam of opening exceeds the width of stud cavity, the opening shall be framed on all sides using lengths of steel stud installed between the vertical studs and screw-attached to the steel studs at each end. The framed opening in the wall shall be 4 to 6 in. wider and 4 to 6 in. higher than the diam of the penetrating item such that, when the penetrating item is installed in the opening, a 2 to 3 in. clearance is present between the penetrating item and the framing on all four sides.
   B. Gypsum Board* -- 5/8 in. thick, 4 ft wide with square or tapered edges. The gypsum board type, thickness, number of layers, fastener type and sheet orientation shall be as specified in the individual U300 or U400 Series Design in the UL Fire Resistance Directory. Max diam of opening is 32-1/4 in. for steel stud walls. Max diam of opening is 14-1/2 in. for wood stud walls.
   The F Rating of the firestop system is equal to the fire rating of the wall assembly.

SYMBOL = X

HILTI FIRESTOP SYSTEMS — Reproduced by HILTI, Inc. Courtesy of Underwriters Laboratories, Inc. December 4, 2002 — CLASSIFIED UL US

NOTE: ALL DETAILS & DIMENSIONS ARE SHOWN FOR DSA APPROVAL ONLY. SPRINKLER CONTRACTOR SHALL FIELD VERIFY ALL INFORMATION PRIOR TO THE START OF ANY WORK. ANY DEVIATIONS FROM THESE PLANS ARE REQUIRED TO BE APPROVED BY CONSULTING ENGINEER.

NOTE: NO SUBSTITUTION OF FIRE SPRINKLER PIPING OR FITTINGS, INCLUDING FLEXIBLE DROPS, SHALL BE ALLOWED WITHOUT DSA APPROVAL OF REVISED MATERIAL SUBMITTAL AND HYDRAULIC CALCULATIONS.

NOTE: C-16 CONTRACTOR SHALL ONLY DESIGN THE AFS SYSTEM WHICH THEY INSTALL, INCLUDING SITE SPECIFIC FIRE RISER.

FIRE SPRINKLER CONTRACTOR, INC. C-16 #534644 STATE OF CALIFORNIA

JTS MODULAR
DESIGN BUILD TRANSPORT ENJOY
7001 MC Divit DRIVE
BAKERSFIELD, CA 93313
WWW.JTSMODULAR.COM
OFFICE: (661) 835-9270

STRUCTURAL ENGINEER OF RECORD
ORION
Structural Engineering, Inc.
12267 OLD POMERADO ROAD, SUITE A
POWAY, CA 92064
PHONE (858) 679-1974
FAX (858) 679 1975

REGISTERED PROFESSIONAL ENGINEER RYAN J. OMER No. S 4439 EXP. 12/31/18 STRUCTURAL STATE OF CALIFORNIA

MONSON-SULTANA ELEMENTARY
RELOCATABLE CLASS ROOM BUILDING
10643 AVENUE 416
SULTANA, CA 93666

IDENTIFICATION STAMP
DIVISION OF THE STATE ARCHITECT
CODE 2016 CBC

APPL # 02-117009
FILE # 54-62
AC FLS SS
DATE 7/23/18

JTS JOB#:
DATE: 01/27/2018

FIRE SPRINKLER DETAILS

FP-2

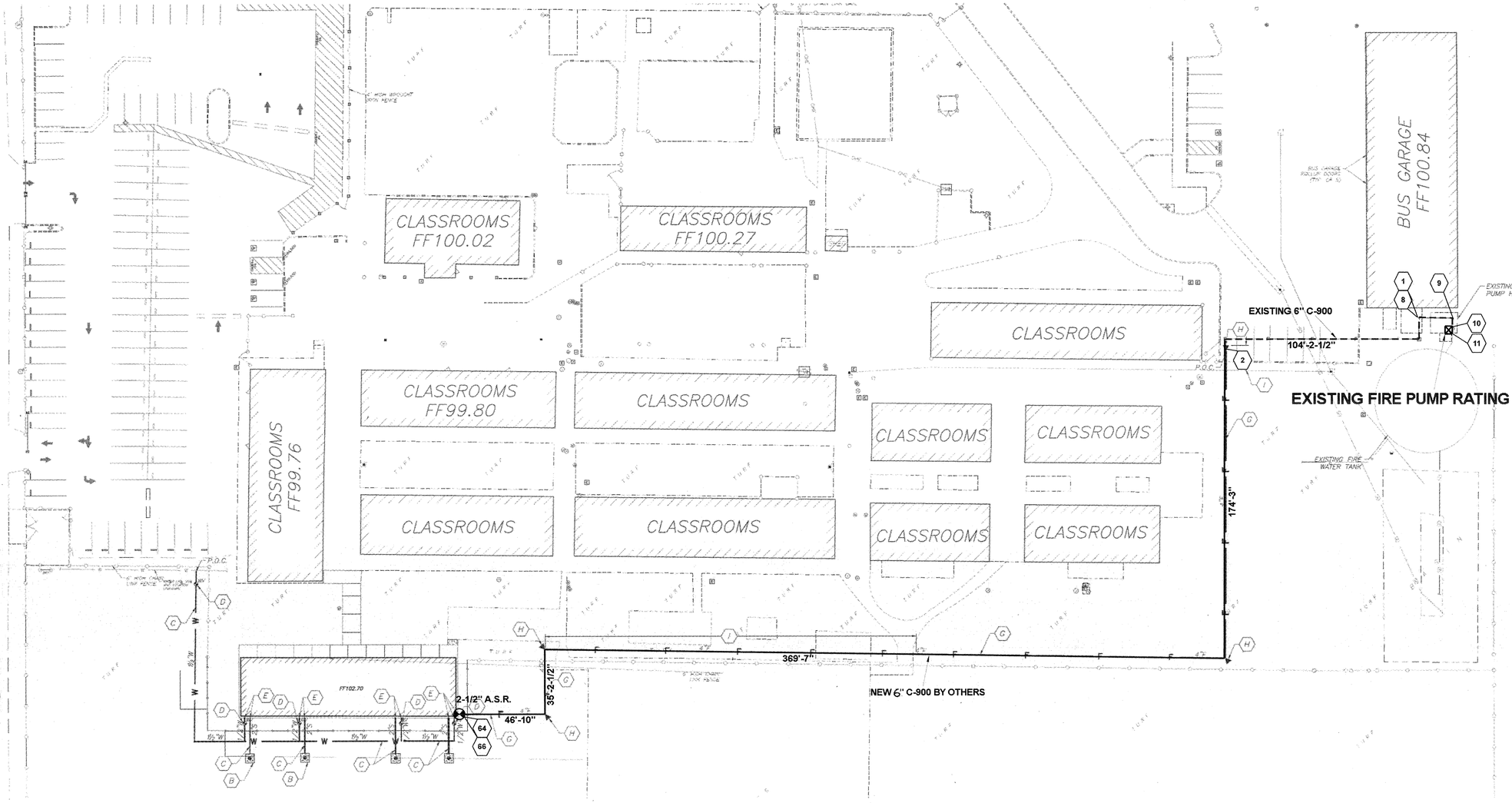

PARTIAL UTILITY LEGEND

A	NOT USED.
B	CONSTRUCT DRAIN WELL PER DETAIL #/C4.
C	FURNISH AND INSTALL PVC, SCH. 40 SEWER OR WATER PIPELINE. BACKFILL TRENCH PER DETAIL A/C4.
D	FURNISH AND INSTALL GATE VALVE PER DETAIL E/C4.
E	MAKE CONNECTION TO STUBOUT FROM BUILDING. FURNISH AND INSTALL ALL NECESSARY FITTINGS. SEE NOTE 2.
F	FURNISH AND INSTALL PIV AND FDC PER DETAIL D/C4.
G	FURNISH AND INSTALL PVC, C900 WATER PIPELINE. BACKFILL TRENCH PER DETAIL A/C4. SIZE AS NOTED.
H	CONSTRUCT CONCRETE THRUST BLOCK PER DETAIL E/C4.
I	SAWCUT AND REMOVE ASPHALT CONCRETE PAVEMENT, STRUCTURAL SECTION, CONCRETE CURB, GUTTER, SIDEWALK AND MOWSTRIP AS NECESSARY TO INSTALL NEW PIPELINE AND DETECTOR CHECK. TRENCH BACKFILL AND PATCH PAVING PER DETAIL A/C4.
F — 4"F —	NEW FIRE PIPE LINE. SIZE AS NOTED.
SS — 2"SS —	NEW SEWER PIPE LINE. SIZE AS NOTED.
W — 1/2"W —	NEW WATER LINE. SIZE AS NOTED.
SD — 6"SD —	NEW STORM DRAIN PIPE LINE. SEE GRADING AND DRAINAGE PLAN.
P.O.C.	NEW POINT OF CONNECTION.
	NEW SEWER SURFACE CLEANOUT.
▲	NEW THRUST BLOCK.
	NEW WATER VALVE.
	NEW DRAIN WELL.

UTILITY NOTES:

1. AS A FIRST ORDER OF WORK, THE CONTRACTOR SHALL POTHOLE AND LOCATE THE EXISTING UTILITY LINE FOR THE POINT OF CONNECTION. PROVIDE TO THE ENGINEER INFORMATION ON DEPTH, SIZE, PIPE MATERIAL AND LOCATION. ALLOW THE ENGINEER SUFFICIENT TIME TO REVIEW UTILITY INFORMATION FOR A POSSIBLE REVISION TO THE HORIZONTAL AND VERTICAL ALIGNMENT OF THE NEW UTILITY. THE CONTRACTOR IS NOT TO PROCEED WITH THE INSTALLATION OF THE NEW UTILITIES UNTIL APPROVED BY THE ENGINEER.
2. THE CONTRACTOR SHALL COORDINATE WITH THE BUILDING PLUMBING PLAN FOR NEW UTILITY STUBOUT LOCATIONS.
3. THE LOCATION OF NEW UTILITIES ARE SCHEMATICALLY SHOWN. THE CONTRACTOR SHALL INSTALL THE UTILITIES BASED ON NEW AND EXISTING CONDITIONS IN THE FIELD.
4. IN EXISTING ASPHALT CONCRETE AND CONCRETE IMPROVEMENTS, THE CONTRACTOR SHALL SAWCUT AND REMOVE AS NECESSARY TO INSTALL NEW UTILITIES. REPLACE REMOVED IMPROVEMENTS WITH LIKE KIND AND MATCH THICKNESS.

FIRE SPRINKLER SITE PLAN SCALE: 1" = 30'-0

NOTE: SITE PLAN IS SHOWN FOR HYDRAULIC CALCULATION NODE REFERENCE ONLY;
THE UNDERGROUND IS DONE BY OTHERS. REFERENCE CIVIL SHEETS
CONTROL FIRE PROTECTION WILL START 6" ABOVE FINISHED FLOOR INSIDE OF BUILDING

SCALE: 1" = 30'

Alan Mok, PE, PLS,
LEED AP
Principal
"418 N. PALM AVENUE #101
FRESNO, CALIFORNIA 93711
Tel 559 432 6675
Fax 559 432 6697
www.alanmokengineering.com

Alan Mok Engineering

LICENSED ARCHITECT — DAVID M. IWANAGA — C 17199 — 3-31-19 — STATE OF CALIFORNIA

IDENTIFICATION STAMP — DIV. OF THE STATE ARCHITECT — AC ____ FLS ____ SS ____ — DATE ____

FILE: 5442
PIN: 7809-05

PROJECT NAME: MONSON-SULTANA ELEMENTARY RELOCATABLE
10643 AVENUE 416, SULTANA, CA 93666

DATE	DESCRIPTION	PROJECT DEVELOPMENT	No.	DATE	DESCRIPTION	REVISIONS

SHEET NAME: SEWER AND WATER PLAN

PROJECT ARCHITECT: DAVID IWANAGA | PROJECT NUMBER: 18-25 | SHEET NUMBER: C3
DRAWN BY: | SCALE:
CHECKED BY: | DATE: 02.17.18

JTS MODULAR
DESIGN BUILD TRANSPORT ENJOY
7001 MC Divitt DRIVE
BAKERSFIELD, CA 93313
WWW.JTSMODULAR.COM
OFFICE: (661) 835-9270

STRUCTURAL ENGINEER OF RECORD
ORION
Structural Engineering, Inc.
12257 OLD POMERADO ROAD, SUITE A
POWAY, CA 92064
PHONE (858) 679-1974
FAX (858) 679-1975

REGISTERED PROFESSIONAL ENGINEER — BRIAN J. OMER — No. S 4432 — EXP. 12/31/18 — STRUCTURAL — STATE OF CALIFORNIA

FIRE SPRINKLER CONTRACTOR — CONTROL FIRE PROTECTION, INC. — C-16 #534644 — STATE OF CALIFORNIA

MONSON-SULTANA ELEMENTARY
RELOCATABLE CLASS ROOM BUILDING
10643 AVENUE 416
SULTANA, CA 93666

IDENTIFICATION STAMP
DIVISION OF THE STATE ARCHITECT
CODE 2016 CBC

APPL # 02-117009
FILE # 54-42
AC ____ FLS ____ SS ____
DATE 7/23/18

JTS JOB#:
DATE: 01/27/2018

FIRE SITE PLAN
REFERENCE ONLY

FP-3

MAIN ELEVATION: 10'-0-1/2 FF-C, 1'-10 D-C, 1'-0 B-C THIS AREA
MAIN HANGERS: #10 (1'-4) THIS AREA

LINE ELEVATION: FF-C VARIES, 1'-4 D-C, 0'-6 B-C THIS AREA
LINE HANGERS: #10 (0'-11) THIS AREA

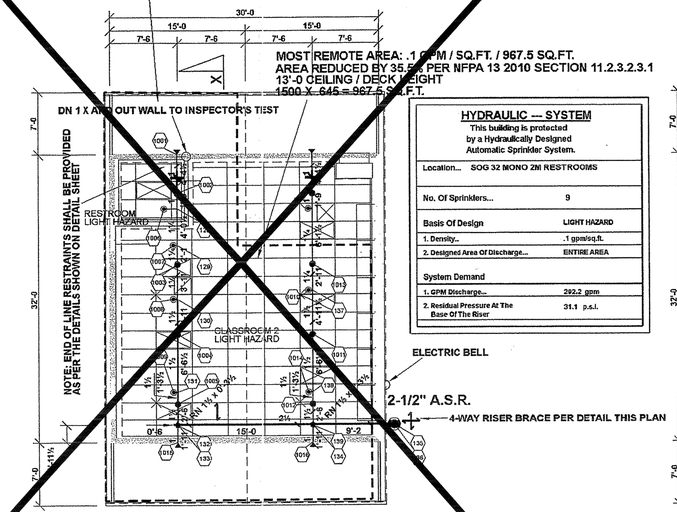

FIRE SPRINKLER PLAN
SOG 32 2-M RESTROOM
SCALE: 1/8" = 1'-0

SCALE 1/8"=1'-0

HYDRAULIC --- SYSTEM
This building is protected by a Hydraulically Designed Automatic Sprinkler System.

Location...	SOG 32 MONO 2M RESTROOMS
No. Of Sprinklers...	9
Basis Of Design	LIGHT HAZARD
1. Density...	.1 gpm/sq.ft.
2. Designed Area Of Discharge...	ENTIRE AREA
System Demand	
1. GPM Discharge...	292.2 gpm
2. Residual Pressure At The Base Of The Riser	31.1 p.s.i.

Sprinkler Legend

Symbol	Manufacturer	SIN/Model	Quantity	K-Factor	Type	Response	Orifice	Finish	Temperature	Note
◉	Viking Corporation	VK302	6	5.6	Pendent	Quick	½"	Chrome	155°F	
●	Viking Corporation	VK300	8	5.6	Upright	Quick	½"	Brass	200°F	
◀	Viking Corporation	VK305	4	5.6	Sidewall	Quick	½"	Chrome	155°F	
			Total = 18							

MAIN ELEVATION: 10'-0-1/2 FF-C, 1'-10 D-C, 1'-0 B-C THIS AREA
MAIN HANGERS: #10 (1'-4) THIS AREA

LINE ELEVATION: FF-C VARIES, 1'-4 D-C, 0'-6 B-C THIS AREA
LINE HANGERS: #10 (0'-11) THIS AREA

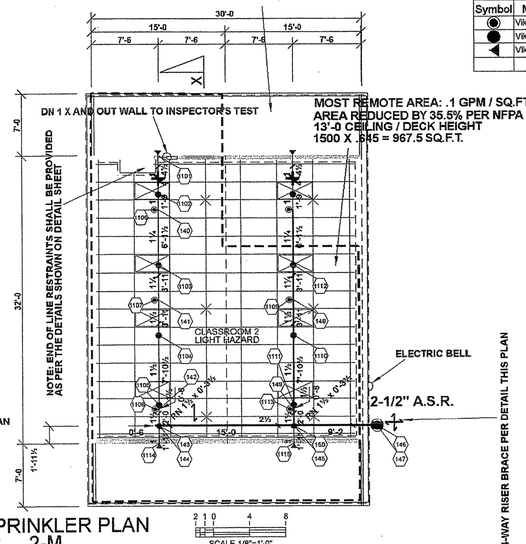

FIRE SPRINKLER PLAN
SOG 32 2-M
SCALE: 1/8" = 1'-0

SCALE 1/8"=1'-0

HYDRAULIC --- SYSTEM
This building is protected by a Hydraulically Designed Automatic Sprinkler System.

Location...	SOG 32 MONO 2M
No. Of Sprinklers...	8
Basis Of Design	LIGHT HAZARD
1. Density...	.1 gpm/sq.ft.
2. Designed Area Of Discharge...	ENTIRE AREA
System Demand	
1. GPM Discharge...	270.8 gpm
2. Residual Pressure At The Base Of The Riser	28.3 p.s.i.

Sprinkler Legend

Symbol	Manufacturer	SIN/Model	Quantity	K-Factor	Type	Response	Orifice	Finish	Temperature	Note
◉	Viking Corporation	VK302	7	5.6	Pendent	Quick	½"	Chrome	155°F	
●	Viking Corporation	VK300	8	5.6	Upright	Quick	½"	Brass	200°F	
◀	Viking Corporation	VK305	4	5.6	Sidewall	Quick	½"	Chrome	155°F	
			Total = 19							

MAIN ELEVATION: 10'-0-1/2 FF-C, 1'-10 D-C, 1'-0 B-C THIS AREA
MAIN HANGERS: #10 (1'-4) THIS AREA

LINE ELEVATION: FF-C VARIES, 1'-4 D-C, 0'-6 B-C THIS AREA
LINE HANGERS: #10 (0'-11) THIS AREA

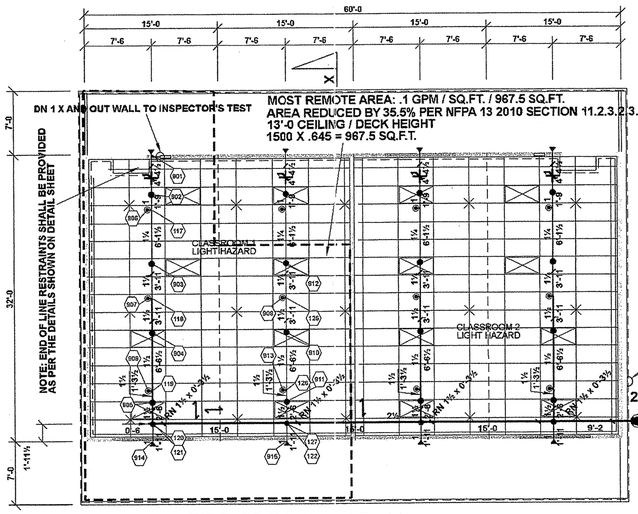

FIRE SPRINKLER PLAN
SOG 32 4-M
SCALE: 1/8" = 1'-0

SCALE 1/8"=1'-0

Sprinkler Legend

Symbol	Manufacturer	SIN/Model	Quantity	K-Factor	Type	Response	Orifice	Finish	Temperature	Note
◉	Viking Corporation	VK302	12	5.6	Pendent	Quick	½"	Chrome	155°F	
●	Viking Corporation	VK300	16	5.6	Upright	Quick	½"	Brass	200°F	
◀	Viking Corporation	VK305	8	5.6	Sidewall	Quick	½"	Chrome	155°F	
			Total = 36							

HYDRAULIC --- SYSTEM
This building is protected by a Hydraulically Designed Automatic Sprinkler System.

Location...	SOG 32 MONO 4M
No. Of Sprinklers...	8
Basis Of Design	LIGHT HAZARD
1. Density...	.1 gpm/sq.ft.
2. Designed Area Of Discharge...	967.5 SQ.FT.
System Demand	
1. GPM Discharge...	261.1 gpm
2. Residual Pressure At The Base Of The Riser	27.2 p.s.i.

MAIN ELEVATION: 10'-0-1/2 FF-C, 1'-10 D-C, 1'-0 B-C THIS AREA
MAIN HANGERS: #10 (1'-4) THIS AREA

LINE ELEVATION: FF-C VARIES, 1'-4 D-C, 0'-6 B-C THIS AREA
LINE HANGERS: #10 (0'-11) THIS AREA

FIRE SPRINKLER PLAN
SOG 32 3-M
SCALE: 1/8" = 1'-0

SCALE 1/8"=1'-0

Sprinkler Legend

Symbol	Manufacturer	SIN/Model	Quantity	K-Factor	Type	Response	Orifice	Finish	Temperature	Note
◉	Viking Corporation	VK302	9	5.6	Pendent	Quick	½"	Chrome	155°F	
●	Viking Corporation	VK300	12	5.6	Upright	Quick	½"	Brass	200°F	
◀	Viking Corporation	VK305	6	5.6	Sidewall	Quick	½"	Chrome	155°F	
			Total = 27							

HYDRAULIC --- SYSTEM
This building is protected by a Hydraulically Designed Automatic Sprinkler System.

Location...	SOG 32 MONO 3M
No. Of Sprinklers...	8
Basis Of Design	LIGHT HAZARD
1. Density...	.1 gpm/sq.ft.
2. Designed Area Of Discharge...	967.5 SQ.FT.
System Demand	
1. GPM Discharge...	270.6 gpm
2. Residual Pressure At The Base Of The Riser	29.7 p.s.i.

NOTE: FOR ALL DETAILS PLEASE SEE SHEET FP-4M

MAIN ELEVATION: 10'-0-1/2 FF-C, 1'-10 D-C, 1'-0 B-C THIS AREA
MAIN HANGERS: #10 (1'-4) THIS AREA

LINE ELEVATION: FF-C VARIES, 1'-4 D-C, 0'-6 B-C THIS AREA
LINE HANGERS: #10 (0'-11) THIS AREA

MOST REMOTE AREA: .1 GPM / SQ.FT. / 967.5 SQ.FT.
AREA REDUCED BY 35.5% PER NFPA 13 2010 SECTION 11.2.3.2.3.1
13'-0 CEILING / DECK HEIGHT
1500 X .645 = 967.5 SQ.F.T.

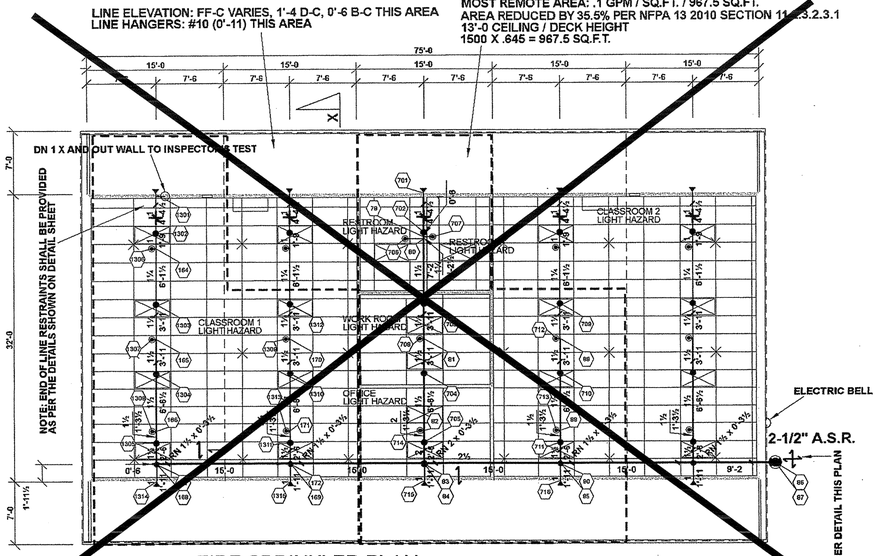

FIRE SPRINKLER PLAN
SOG 32 5-M RESTROOMS
SCALE: 1/8" = 1'-0

SCALE 1/8"=1'-0

HYDRAULIC --- SYSTEM
This building is protected by a Hydraulically Designed Automatic Sprinkler System.

Location...	SOG 32 MONO 5M RESTROOMS
No. Of Sprinklers...	9
Basis Of Design	LIGHT HAZARD
1. Density...	.1 gpm/sq.ft.
2. Designed Area Of Discharge...	967.5 SQ.FT.
System Demand	
1. GPM Discharge...	277.4 gpm
2. Residual Pressure At The Base Of The Riser	25.5 p.s.i.

Sprinkler Legend

Symbol	Manufacturer	SIN/Model	Quantity	K-Factor	Type	Response	Orifice	Finish	Temperature	Note
◉	Viking Corporation	VK302	16	5.6	Pendent	Quick	½"	Chrome	155°F	
●	Viking Corporation	VK300	20	5.6	Upright	Quick	½"	Brass	200°F	
◀	Viking Corporation	VK305	10	5.6	Sidewall	Quick	½"	Chrome	155°F	
			Total = 46							

FOR REFERENCE ONLY

IDENTIFICATION STAMP
DIV. OF THE STATE ARCHITECT
02 11 5 09
AC FLS
DATE

JTS MODULAR
DESIGN • BUILD • TRANSPORT • ENJOY

COMMERCIAL
INSTITUTIONAL
AND
RESIDENTIAL
MODULAR
BUILDINGS
DESIGN &
PLANNING

7001 Mc Divitt Dr.
Bakersfield, CA 93313
Office: (661) 835-9270
Plant: (661) 833-2940
Fax: (661) 847-1007
www.jtsmodular.com

SOG-32 MONO ROOF RE-LOCATABLE BUILDING PC

APPROVALS

FILE # PC-175
APPL 02-1138899
AC — FLS [illegible]
DATE 3/19/15
DATE
PROJECT

FIRE SPRINKLER CONTRACTOR
CHRISTOPHER PRE PROTECTION, INC
C-16
#534644
STATE OF CALIFORNIA
PC

FIRE SPRINKLER PLANS

FP-1M

GENERAL NOTES:
A. IT IS THE RESPONSIBILITY OF THE OWNER TO PROPERLY MAINTAIN THE FIRE PROTECTION SYSTEM IN AN OPERABLE CONDITION AT ALL TIMES.
B. THE FIRE PROTECTION CONTRACTOR WILL PROVIDE THE OWNER WITH THE NECESSARY INSTRUCTION MANUALS FOR THE UPKEEP OF THE SYSTEM, AS WELL AS A COPY OF N.F.P.A. 25.
C. ONLY NEW SPRINKLERS SHALL BE EMPLOYED IN THE INSTALLATION OF THE SPRINKLER SYSTEM.
D. THE SYSTEM SHALL ONLY EMPLOY THE USE OF APPROVED MATERIALS AND DEVICES.
E. SPRINKLER PLANS SHALL BE APPROVED PRIOR TO THE INSTALLATION OF ANY PIPE. A SET OF APPROVED PLANS SHALL BE MAINTAINED AT ALL TIMES ON THE JOB SITE.
F. AN APPOINTMENT SHALL BE MADE A MINIMUM OF TWO WORKING DAYS IN ADVANCE, WITH THE APPROPRIATE FIRE PREVENTION DIVISION REGIONAL OFFICE FOR ALL INSPECTIONS AND TESTS.
G. ALL UNDERGROUND MAINS AND LEAD-IN CONNECTIONS SHALL BE FLUSHED, AS INDICATED IN NFPA PRIOR TO CONNECTING TO THE OVERHEAD PIPING. THE FLUSHING SHALL CONTINUE UNTIL THE WATER IS CLEAR. FLUSHING SHOULD BE PERFORMED AT THE TIME OF THE HYDROSTATIC TEST, AND SHALL BE WITNESSED BY A FIRE PREVENTION DIVISION INSPECTOR.
H. SYSTEM PIPING SHALL BE HYDROSTATICALLY TESTED AT 200 PSI FOR TWO HOURS OR AT 50 PSI ABOVE THE MAXIMUM SYSTEM OPERATING PRESSURE, WHICHEVER IS GREATER.
I. FIRE DEPARTMENT CONNECTIONS SHALL BE LOCATED ON THE ADDRESS SIDE OF THE BUILDING, FACE THE STREET, BE VISIBLE AND ACCESSIBLE, HAVE NTS FEMALE INLETS, HAVE PROTECTIVE CAPS, AND AN ACCESSIBLE, APPROVED CHECK VALVE LOCATED IN THE MAIN LINE (AS CLOSE TO THE INLETS AS POSSIBLE).
J. ALL VALVES AND FIRE DEPARTMENT CONNECTIONS SHALL HAVE A PERMANENTLY AFFIXED SIGNS, INDICATING THEIR FUNCTION.
K. A STOCK OF SPARE SPRINKLERS OF EACH STYLE, TYPE, AND TEMPERATURE RATING ALONG WITH A SPRINKLER WRENCH SHALL BE LOCATED AT THE MAIN RISER.
L. ANY PORTION OF THIS SPRINKLER SYSTEM EXPOSED TO FREEZING TEMPERATURES SHALL BE ADEQUATELY PROTECTED. (HEAT TAPE IS NOT AN ACCEPTABLE METHOD OF PROTECTION).
M. WELDING SHALL BE PERFORMED PER NFPA 13 REQUIREMENTS.
N. AUTOMATIC SPRINKLER SYSTEMS SHALL BE SUPERVISED BY A LISTED/APPROVED CENTRAL, PROPRIETARY, OR REMOTE STATION OR A LOCAL ALARM WHEN APPROVED BY THE CHIEF, WHICH WILL GIVE AN AUDIBLE SIGNAL AT A CONSTANTLY ATTENDED LOCATION WHEN THE NUMBER OF SPRINKLERS IS 100 OR MORE.

**NOTE: ALL DETAILS & DIMENSIONS ARE SHOWN FOR DSA APPROVAL ONLY.
SPRINKLER CONTRACTOR SHALL FIELD VERIFY ALL INFORMATION
PRIOR TO THE START OF ANY WORK.
ANY DEVIATIONS FROM THESE PLANS ARE REQUIRED TO BE
APPROVED BY CONSULTING ENGINEER. AND DSA**

**NOTE: HYDRAULIC CALCULATIONS ARE BASED ON 35 STATIC PRESSURE WITH A FLOW OF 800GPM @ 30 PSI AT THE BASE OF THE RISER.
IF THE WATER FLOW TEST DONE AT THE SITE PROVES TO BE LESS THAN THIS NEW CALCULATIONS WILL NEED TO BE PROVIDED
& THE PIPE SIZING SHOWN ON THIS PLAN SHALL NOT BE USED
REVISED CALCULATIONS SHALL BE SUBMITTED TO DSA FOR APPROVAL.**

OCCUPANCY CLASSIFICATION: LIGHT HAZARD
CONSTRUCTION TYPE: COMBUSTIBLE OBSTRUCTED

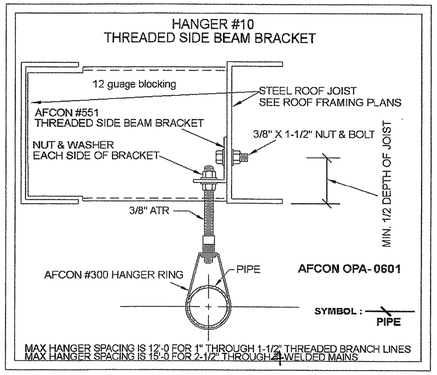

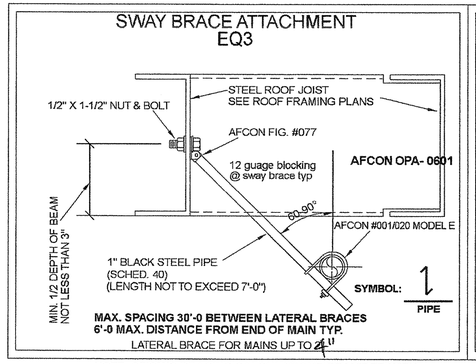

NOTE: SEISMIC BRACING CALCULATIONS PROVIDED WITH PRODUCT DATA & HYDRAULIC CALCULATIONS SUBMITTAL TYP.

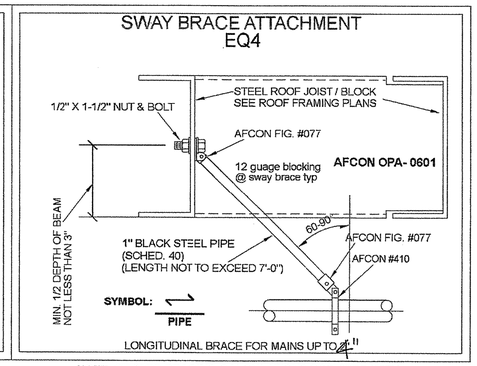

NOTE: SEISMIC BRACING CALCULATIONS PROVIDED WITH PRODUCT DATA & HYDRAULIC CALCULATIONS SUBMITTAL TYP.

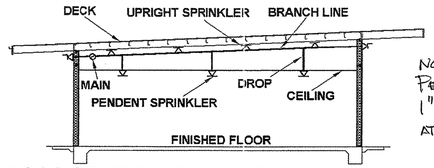

NOTE: PENDANT TO HAVE 1" CLR ALL AROUND AT CLG.

CROSS SECTION THROUGH LINE X-X NTS

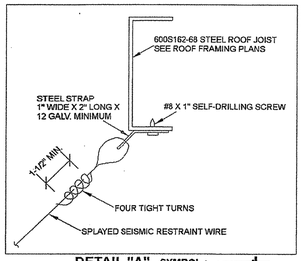

DETAIL "A" SYMBOL : PIPE

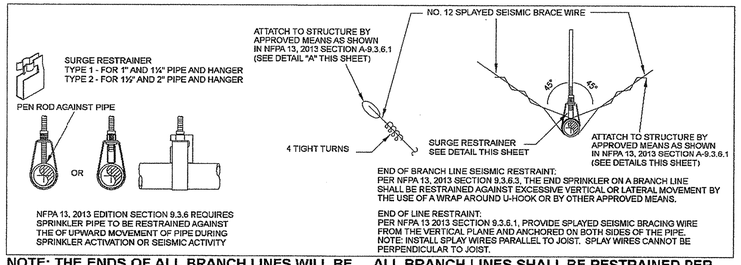

NOTE: THE ENDS OF ALL BRANCH LINES WILL BE RESTRAINED PER NFPA 13 (2013) SECTION 9.3.6.3

ALL BRANCH LINES SHALL BE RESTRAINED PER NFPA 13 (2013) 9.3.6.4

WALL LEGEND:
NOTE: NO INTERIOR WALLS ARE FIRE RATED

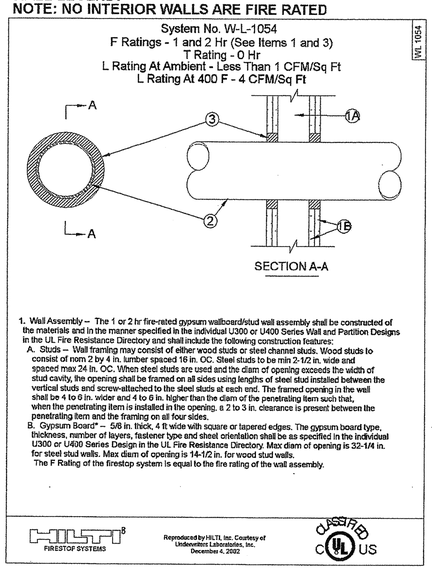

**NOTE: ALL DETAILS & DIMENSIONS ARE SHOWN FOR DSA APPROVAL ONLY.
SPRINKLER CONTRACTOR SHALL FIELD VERIFY ALL INFORMATION
PRIOR TO THE START OF ANY WORK.
ANY DEVIATIONS FROM THESE PLANS ARE REQUIRED TO BE
APPROVED BY CONSULTING ENGINEER. AND DSA**

NOTE: NO SUBSTITUTION OF FIRE SPRINKLER PIPING OR FITTINGS, INCLUDING FLEXIBLE DROPS, SHALL BE ALLOWED WITHOUT DSA APPROVAL OF REVISED MATERIAL SUBMITTAL AND HYDRAULIC CALCULATIONS.

NOTE: C-16 CONTRACTOR SHALL ONLY DESIGN THE AFS SYSTEM WHICH THEY INSTALL, INCLUDING SITE SPECIFIC FIRE RISER.

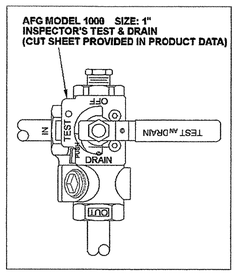

INSPECTOR'S TEST
DETAIL NTS

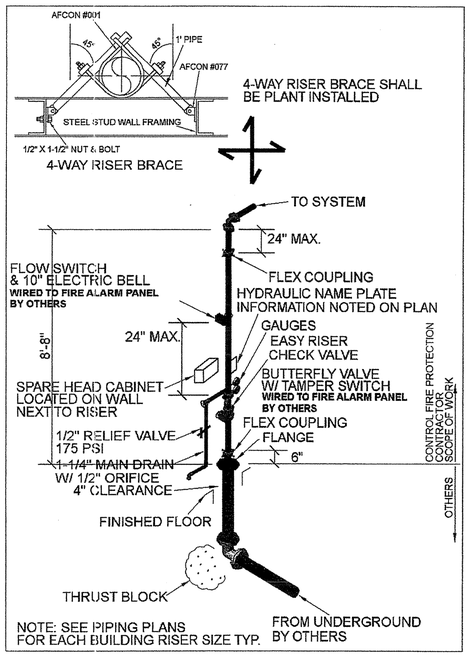

RISER DETAIL NTS

IDENTIFICATION STAMP
DIV. OF THE STATE ARCHITECT
02 117009
AC
DATE 7/23/14

JTS MODULAR
DESIGN • BUILD • TRANSPORT • ENJOY
COMMERCIAL INSTITUTIONAL AND RESIDENTIAL MODULAR BUILDINGS DESIGN & PLANNING
7001 Mc Divitt Dr.
Bakersfield, CA 93313
Office: (661) 835-9270
Plant: (661) 833-2940
Fax: (661) 847-1007
www.jtsmodular.com

**SOG-32
MONO ROOF
RE-LOCATABLE
BUILDING PC**

APPROVALS
FILE # PC-JTS
APPL 02-113899
AC — FLS
DATE 3/19/15
DATE
PROJECT

FIRE SPRINKLER CONTRACTOR
CONTROL FIRE PROTECTION, INC.
C-16
#534644
STATE OF CALIFORNIA
PC

FIRE SPRINKLER DETAILS

FP-4M

Project Name:	MONSON	NRCC-PRF-01-E	Page 1 of 18
Project Address:	10643 AVE 416 DINUBA	Calculation Date/Time:	15:26, Tue, Jun 19, 2018
Compliance Scope:	NewComplete	Input File Name:	C18-117.cibd16x

A. PROJECT GENERAL INFORMATION

1.	Project Location (city)	DINUBA	8.	Standards Version	Compliance2016
2.	CA Zip Code		9.	Compliance Software (version)	EnergyPro 7.2
3.	Climate Zone	13	10.	Weather File	VISALIA_723896_CZ2010.epw
4.	Total Conditioned Floor Area in Scope	3,658 ft²	11.	Building Orientation (deg)	(N) 0 deg
5.	Total Unconditioned Floor Area	0 ft²	12.	Permitted Scope of Work	NewComplete
6.	Total # of Stories (Habitable Above Grade)	1	13	Building Type(s)	Nonresidential
7.	Total # of dwelling units	0	14	Gas Type	NaturalGas

B. COMPLIANCE RESULTS FOR PERFORMANCE COMPONENTS (Annual TDV Energy Use, kBtu/ft² -yr) — § 140.1

BUILDING COMPLIES

1. Energy Component	2. Standard Design (TDV)	3. Proposed Design (TDV)	4. Compliance Margin (TDV)	5. Percent Better than Standard
Space Heating	14.34	19.97	-5.63	-39.3%
Space Cooling	103.69	86.67	17.02	16.4%
Indoor Fans	76.96	51.83	25.13	32.7%
Heat Rejection	--	--	--	--
Pumps & Misc.	--	--	--	--
Domestic Hot Water	11.54	11.54	--	0.0%
Indoor Lighting	58.77	21.85	36.92	62.8%
COMPLIANCE TOTAL	**265.30**	**191.86**	**73.44**	**27.7%**
Receptacle	64.49	64.49	0.0	0.0%
Process	--	--	--	--
Other Ltg	--	--	--	--
Process Motors	--	--	--	--
TOTAL	**329.79**	**256.35**	**73.4**	**22.3%**

Project Name:	MONSON	NRCC-PRF-01-E	Page 2 of 18
Project Address:	10643 AVE 416 DINUBA	Calculation Date/Time:	15:26, Tue, Jun 19, 2018
Compliance Scope:	NewComplete	Input File Name:	C18-117.cibd16x

C. PRIORITY PLAN CHECK/ INSPECTION ITEMS (in order of highest to lowest TDV energy savings)

1st	Indoor Lighting: Check lighting
2nd	Indoor Fans: Check envelope and mechanical
3rd	Space Cooling: Check envelope and mechanical
4th	Heat Rejection: Check envelope and mechanical
5th	Pumps & Misc.: Check mechanical
6th	Domestic Hot Water: Check mechanical
7th	Space Heating: Check envelope and mechanical

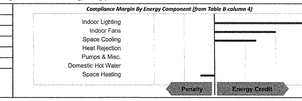

D. EXCEPTIONAL CONDITIONS

The building does not include service water heating. Verify that service water heating is not required and is not included in the design.

This project uses the Simplified Geometry Performance Modeling Approach which is not capable of modeling daylighting controls and assumes the prescriptive Secondary Daylit Control requirements are met. PRESCRIPTIVE COMPLIANCE documentation (form NRCC-LTI-02-E) for the requirements of section 140.6(d) Automatic Daylighting Controls in Secondary Daylit Zones is required.

E. HERS VERIFICATION

This Section Does Not Apply

F. ADDITIONAL REMARKS

None Provided

Project Name:	MONSON	NRCC-PRF-01-E	Page 3 of 18
Project Address:	10643 AVE 416 DINUBA	Calculation Date/Time:	15:26, Tue, Jun 19, 2018
Compliance Scope:	NewComplete	Input File Name:	C18-117.cibd16x

G. COMPLIANCE PATH & CERTIFICATE OF COMPLIANCE SUMMARY

Identify which building components use the performance or prescriptive path for compliance. "NA"= not in project
For components that utilize the performance path, indicate the sheet number that includes mandatory notes on plans.

Building Component		Compliance Path	Compliance Forms *(required for submittal)*	Location of Mandatory Notes on Plans
Envelope	☒	Performance	NRCC-PRF-ENV-DETAILS (section of the NRCC-PRF-01-E)	
	☐	Prescriptive	NRCC-ENV-01 / 02 / 03 / 04 / 05 / 06-E	
	☐	NA		
Mechanical	☒	Performance	NRCC-PRF-MCH-DETAILS (section of the NRCC-PRF-01-E)	
	☐	Prescriptive	NRCC-MCH-01 / 02 / 03 / 04 / 05 / 06 / 07-E	
	☐	NA		
Domestic Hot Water	☐	Performance	NRCC-PRF-PLB-DETAILS (section of the NRCC-PRF-01-E)	
	☐	Prescriptive	NRCC-PLB-01-E	
	☒	NA		
Lighting (Indoor Conditioned)	☒	Performance	NRCC-PRF-LTI-DETAILS (section of the NRCC-PRF-01-E)	
	☐	Prescriptive	NRCC-LTI-01 / 02 / 03 / 04 / 05-E	
	☐	NA		
Covered Process: Commercial Kitchens	☐	Performance	S2 (section of the NRCC-PRF-01-E)	
	☐	Prescriptive	NRCC-PRC-01/ 03-E	
	☒	NA		
Covered Process: Computer Rooms	☐	Performance	S3 (section of the NRCC-PRF-01-E)	
	☐	Prescriptive	NRCC-PRC-01/ 04-E	
	☒	NA		
Covered Process: Laboratory Exhaust	☐	Performance	S4 (section of the NRCC-PRF-01-E)	
	☐	Prescriptive	NRCC-PRC-01/ 09-E	
	☒	NA		

Project Name:	MONSON	NRCC-PRF-01-E	Page 4 of 18
Project Address:	10643 AVE 416 DINUBA	Calculation Date/Time:	15:26, Tue, Jun 19, 2018
Compliance Scope:	NewComplete	Input File Name:	C18-117.cibd16x

G. COMPLIANCE PATH & CERTIFICATE OF COMPLIANCE SUMMARY

The following building components are only eligible for prescriptive compliance. Indicate which are relevant to the project.			*The following building components may have mandatory requirements per Part 6. Indicate which are relevant to the project.*			
Yes	**NA**	**Prescriptive Requirement**	**Compliance Forms**	**Yes**	**NA**	**Mandatory Requirement**	**Compliance Forms**
☐	☒	Lighting (Indoor Unconditioned) §140.6	NRCC-LTI-01 / 02 / 03 / 04 / 05-E	☐ ☐	☒ ☒	Commissioning: §120.8 Simple Systems Complex Systems	NRCC-CXR-01 / 02 / 03 / 05-E NRCC-CXR-01 / 02 / 04 / 05-E
☒	☐	Lighting (Outdoor) §140.7	NRCC-LTO-01 / 02 / 03-E	☐	☒	Electrical: §130.5	NRCC-ELC-01-E
☐	☒	Lighting (Sign) §140.8	NRCC-LTS-01-E	☐	☒	Solar Ready: §110.10	NRCC-SRA-01 / 02-E
☐	☒	Solar Thermal Water Heating: §140.5	NRCC-STH-01-E	☐ ☐ ☐ ☐ ☐	☒ ☒ ☒ ☒ ☒	Covered Process: §120.6 Parking Garage Commercial Refrigeration Warehouse Refrigeration Compressed Air Process Boilers	NRCC-PRC-01-E NRCC-PRC-02-E NRCC-PRC-05-E NRCC-PRC-06/07/08-E NRCC-PRC-10-E NRCC-PRC-11-E

Project Name:	MONSON	NRCC-PRF-01-E	Page 5 of 18
Project Address:	10643 AVE 416 DINUBA	Calculation Date/Time:	15:26, Tue, Jun 19, 2018
Compliance Scope:	NewComplete	Input File Name:	C18-117.cibd16x

H. CERTIFICATE OF INSTALLATION, CERTIFICATE OF ACCEPTANCE & CERTIFICATE OF VERIFICATION SUMMARY (NRCI/NRCA/NRCV) – Documentation Author to indicate which Certificates must be submitted for the features to be recognized for compliance (Retain copies and verify forms are completed and signed to post in field for Field Inspector to verify). See Tables G. and H. in MCH and LTI Details Sections for Acceptance Tests and forms by equipment.

Confirmed

Building Component	Compliance Forms *(required for submittal)*	Pass	Fail
Envelope	☒ NRCI-ENV-01-E - For all buildings	☐	☐
	☒ NRCA-ENV-02-F- NFRC label verification for fenestration	☐	☐
Mechanical	☒ NRCI-MCH-01-E - For all buildings with Mechanical Systems	☐	☐
	☒ NRCA-MCH-02-A- Outdoor Air	☐	☐
	☒ NRCA-MCH-03-A – Constant Volume Single Zone HVAC	☐	☐
	☒ NRCA-MCH-04-H- Air Distribution Duct Leakage	☐	☐
	☐ NRCA-MCH-05-A- Air Economizer Controls	☐	☐
	☐ NRCA-MCH-06-A- Demand Control Ventilation	☐	☐
	☐ NRCA-MCH-07-A – Supply Fan Variable Flow Controls	☐	☐
	☐ NRCA-MCH-08-A- Valve Leakage Test	☐	☐
	☐ NRCA-MCH-09-A – Supply Water Temp Reset Controls	☐	☐
	☐ NRCA-MCH-10-A- Hydronic System Variable Flow Controls	☐	☐
	☐ NRCA-MCH-11-A – Auto Demand Shed Controls	☐	☐
	☐ NRCA-MCH-12-A- Packaged Direct Expansion Units	☐	☐
	☐ NRCA-MCH-13-A- Air Handling Units and Zone Terminal Units	☐	☐
	☐ NRCA-MCH-14-A- Distributed Energy Storage	☐	☐
	☐ NRCA-MCH-15-A – Thermal Energy Storage	☐	☐
	☐ NRCA-MCH-16-A- Supply Air Temp Reset Controls	☐	☐
	☐ NRCA-MCH-17-A – Condensate Water Temp Reset Controls	☐	☐
	☐ NRCA-MCH-18-A- Energy Management Controls Systems	☐	☐
	☐ NRCV-MCH-04-H- Duct Leakage Test	☐	☐

Project Name:	MONSON	NRCC-PRF-01-E	Page 6 of 18
Project Address:	10643 AVE 416 DINUBA	Calculation Date/Time:	15:26, Tue, Jun 19, 2018
Compliance Scope:	NewComplete	Input File Name:	C18-117.cibd16x

H. CERTIFICATE OF INSTALLATION, CERTIFICATE OF ACCEPTANCE & CERTIFICATE OF VERIFICATION SUMMARY (NRCI/NRCA/NRCV) – Documentation Author to indicate which Certificates must be submitted for the features to be recognized for compliance (Retain copies and verify forms are completed and signed to post in field for Field Inspector to verify). See Tables G. and H. in MCH and LTI Details Sections for Acceptance Tests and forms by equipment.

Confirmed

Building Component	Compliance Forms *(required for submittal)*	Pass	Fail
Plumbing	☐ NRCI-PLB-01-E - For all buildings with Plumbing Systems	☐	☐
	☐ NRCI-PLB-02-E - required on central systems in high-rise residential, hotel/motel application.	☐	☐
	☐ NRCI-PLB-03-E - Single dwelling unit systems in high-rise residential, hotel/motel application.	☐	☐
	☐ NRCI-PLB-21-E - HERS verified central systems in high-rise residential, hotel/motel application.	☐	☐
	☐ NRCI-PLB-22-E - HERS verified single dwelling unit systems in high-rise residential, hotel/motel application.	☐	☐
	☐ NRCV-PLB-21-H- HERS verified central systems in high-rise residential, hotel/motel application.	☐	☐
	☐ NRCV-PLB-22-H - HERS verified single dwelling unit systems in high-rise residential, hotel/motel application.	☐	☐
	☐ NRCI-STH-01-E - Any solar water heating	☐	☐
Indoor Lighting	☒ NRCI-LTI-01-E - For all buildings	☐	☐
	☐ NRCI-LTI-02-E – Lighting control system, or for an Energy Management Control System (EMCS)	☐	☐
	☐ NRCI-LTI-03-E - Line-voltage track lighting integral current limiter, or for a supplementary overcurrent protection panel used to energize only line-voltage track lighting	☐	☐
	☐ NRCI-LTI-04-E - Two interlocked systems serving an auditorium, a convention center, a conference room, or a theater	☐	☐
	☐ NRCI-LTI-05-E - Lighting Control Credit Power Adjustment Factor (PAF)	☐	☐
	☐ NRCI-LTI-06-E - Additional wattage installed in a video conferencing studio	☐	☐
	☒ NRCA-LTI-02-A - Occupancy sensors and automatic time switch controls.	☐	☐
	☒ NRCA-LTI-03-A - Automatic daylighting controls	☐	☐
	☒ NRCA-LTI-04-A - Demand responsive lighting controls	☐	☐
Outdoor Lighting	☒ NRCI-LTO-01-E – Outdoor Lighting	☐	☐
	☒ NRCI-LTO-02-E- EMCS Lighting Control System	☐	☐
	☒ NRCA-LTO-02-A - Outdoor Lighting Control	☐	☐
Sign Lighting	☐ NRCI-LTS-01-E – Sign Lighting	☐	☐
Electrical	☐ NRCI-ELC-01-E - Electrical Power Distribution	☐	☐
Photovoltaic	☐ NRCI-SPV-01-E Photovoltaic Systems	☐	☐

Project Name:	MONSON	NRCC-PRF-01-E	Page 7 of 18
Project Address:	10643 AVE 416 DINUBA	Calculation Date/Time:	15:26, Tue, Jun 19, 2018
Compliance Scope:	NewComplete	Input File Name:	C18-117.cibd16x

H. CERTIFICATE OF INSTALLATION, CERTIFICATE OF ACCEPTANCE & CERTIFICATE OF VERIFICATION SUMMARY (NRCI/NRCA/NRCV) – Documentation Author to indicate which Certificates must be submitted for the features to be recognized for compliance (Retain copies and verify forms are completed and signed to post in field for Field Inspector to verify). See Tables G. and H. in MCH and LTI Details Sections for Acceptance Tests and forms by equipment.

Confirmed

Building Component	Compliance Forms *(required for submittal)*	Pass	Fail
Covered Process	☐ NRCI-PRC-01-E Covered Processes	☐	☐
	☐ NRCA-PRC-01-F- Compressed Air Systems	☐	☐
	☐ NRCA-PRC-02-F- Kitchen Exhaust	☐	☐
	☐ NRCA-PRC-03-F- Garage Exhaust	☐	☐
	☐ NRCA-PRC-04-F- Refrigerated Warehouse- Evaporator Fan Motor Controls	☐	☐
	☐ NRCA-PRC-05-F- Refrigerated Warehouse- Evaporative Condenser Controls	☐	☐
	☐ NRCA-PRC-06-F- Refrigerated Warehouse- Air Cooled Condenser Controls	☐	☐
	☐ NRCA-PRC-07F- Refrigerated Warehouse- Variable Speed Compressor	☐	☐
	☐ NRCA-PRC-08-F- Electrical Resistance Underslab Heating System	☐	☐

I. ENVELOPE GENERAL INFORMATION (See NRCC-PRF-ENV-DETAILS for more information)

						Confirmed	
1.	Total Conditioned Floor Area	3,658 ft²	5.	Number of Floors Above Grade	1	Pass	Fail
2.	Total Unconditioned Floor Area	0 ft²	6.	Number of Floors Below Grade	0		
3.	Addition Conditioned Floor Area	0 ft²					
4.	Addition Unconditioned Floor Area	0 ft²					

7. Opaque Surfaces & Orientation	8. Total Gross Surface Area	9. Total Fenestration Area	10. Window to Wall Ratio	Pass	Fail
North Wall	1,180 ft²	216 ft²	18.3%	☐	☐
East Wall	310 ft²	52 ft²	16.8%	☐	☐
South Wall	1,180 ft²	168 ft²	14.2%	☐	☐
West Wall	310 ft²	52 ft²	16.8%	☐	☐
Total	2,980 ft²	488 ft²	16.4%	☐	☐
Roof	3,658 ft²	0 ft²	00.0%	☐	☐

Project Name:	MONSON	NRCC-PRF-01-E	Page 8 of 18
Project Address:	10643 AVE 416 DINUBA	Calculation Date/Time:	15:26, Tue, Jun 19, 2018
Compliance Scope:	NewComplete	Input File Name:	C18-117.cibd16x

J. FENESTRATION ASSEMBLY SUMMARY — § 110.6 — Confirmed (Pass / Fail)

1. Fenestration Assembly Name / Sq-ft or I.D.	2. Fenestration Type / Product Type / Frame Type	3. Certification Method[1]	4. Assembly Method	5. Area ft²	6. Overall U-factor	7. Overall SHGC	8. Overall VT	9. Status[2]	Pass	Fail
Residential Prescriptive	Vertical/Fenestration Fixed/Window N/A	NFRC Rated	Manufactured	488	0.32	0.25	0.50	N	☐	☐

[1] *Newly installed fenestration shall have a certified NFRC Label Certificate or use the CEC default tables found in Table 110.6-A and Table 110.6-B. Center of Glass (COG) values are for the glass only, determined by the manufacturer, and are shown for ease of verification. Site-built fenestration values are calculated per Nonresidential Appendix NA6 and are used in the analysis.*
[2] *Status: N – New, A – Altered, E – Existing*

Taking compliance credit for fenestration shading devices? (If "Yes", see NRCC-PRF-ENV-DETAILS for more information) — No

K. OPAQUE SURFACE ASSEMBLY SUMMARY — § 120.7/ § 140.3 — Confirmed (Pass / Fail)

1. Surface Name	2. Surface Type	3. Area (ft²)	4. Framing Type	5. Cavity R-Value	6. Continuous R-Value	7. U-factor / F-factor / C-factor	8. Status[1]	Pass	Fail
R-19 Walls	ExteriorWall	2980	Wood	19	NA	U-Factor: 0.072	N	☐	☐
Slab On Grade17	UndergroundFloor	3658	NA	0	NA	F-Factor: 0.730	N	☐	☐
R-30 Roof Attic19	Roof	3658	Wood	30	NA	U-Factor: 0.038	N	☐	☐

[1] *Status: N – New, A – Altered, E – Existing*

L. ROOFING PRODUCT SUMMARY — § 140.3 — Confirmed (Pass / Fail)

1. Product Type	2. Product Density (lb/ft³)	3. Aged Solar Reflectance	4. Thermal Emittance	5. SRI	6. Cool Roof Credit	7. Roofing Product Description	Pass	Fail
R-30 Roof Attic19	5.895	0.08	0.75	NA	No	NA	☐	☐

Project Name:	MONSON	NRCC-PRF-01-E	Page 9 of 18
Project Address:	10643 AVE 416 DINUBA	Calculation Date/Time:	15:26, Tue, Jun 19, 2018
Compliance Scope:	NewComplete	Input File Name:	C18-117.cibd16x

M. HVAC SYSTEM SUMMARY (see NRCC-PRF-MCH-DETAILS for more information) — § 110.1 / § 110.2

Dry System Equipment [1] (Fan & Economizer info included below in Table N)

1. Equip Name	2. Equip Type	3. System Type (Simple [2] or Complex [3])	4. Qty	5. Total Heating Output (kBtu/h)	6. Supp Heat Source (Y/N)	7. Supp Heat Output (kBtuh)	8. Total Cooling Output (kBtu/h)	9. Efficiency: Cooling	9. Efficiency: Heating	10. Acceptance Testing Required? (Y/N) [4]	11. Status[5]	Confirmed: Pass	Confirmed: Fail
System	SZHP (Split3Phase)	Simple	4	60	No	0	46	SEER-14.00 / EER-12.20	HSPF-8.00	Yes	N	☐	☐

[1] *Dry System Equipment includes furnaces, air-handling units, heat pumps, etc.*
[2] *Simple Systems must complete NRCI-CXR-04-E commissioning design review form*
[3] *Complex Systems must complete NRCC-CXR-04-E commissioning design review form*
[4] *A summary of which acceptance tests are applicable is provided in NRCC-PRF-MCH-DETAILS*
[5] *Status: N - New, A – Altered, E – Existing*

Wet System Equipment Section Does Not Apply	
Discrepancy between modeled and designed equipment sizing? (If "Yes", see Table F "Additional Remarks" for an explanation)	No

N. ECONOMIZER & FAN SYSTEMS SUMMARY[1] — § 140.4 — Confirmed (Pass / Fail)

1. Equip Name	2. Outside Air	3. Supply Fan: CFM	Supply Fan: HP	Supply Fan: BHP	Supply Fan: TSP (inch WC)	Supply Fan: Control	4. Return Fan: CFM	Return Fan: HP	Return Fan: BHP	Return Fan: TSP (inch WC)	Return Fan: Control	5. Economizer Type (if present)	Pass	Fail
System	343	1600	0.500	0.500	0.99	ConstantVolume	NA	NA	NA	NA	NA	NoEconomizer	☐	☐

[1] *Mechanical ventilation calculations and exhaust fans are included in the NRCC-PRF-MCH-DETAILS section*

Project Name:	MONSON	NRCC-PRF-01-E	Page 10 of 18
Project Address:	10643 AVE 416 DINUBA	Calculation Date/Time:	15:26, Tue, Jun 19, 2018
Compliance Scope:	NewComplete	Input File Name:	C18-117.cibd16x

O. EQUIPMENT CONTROLS — § 120.2 — Confirmed (Pass / Fail)

1. Equip Name	2. Equip Type	3. Controls	Pass	Fail
System	SZHP	No DCV Controls No Economizer No Supply Air Temp. Control No Optimum Start No Evaporative Cooler No Heat Recovery	☐	☐

P. SYSTEM DISTRIBUTION SUMMARY — § 120.4/ § 140.4(l)

Dry System Distribution — Confirmed (Pass / Fail)

1. Equip Name	2. Equip Type	3. Duct Leakage and Sealing Required per 140.4(l)	4. Duct Leakage will be verified per NA1 and NA2	5. Ducts: Insulation R-Value	5. Ducts: Location	6. Status[1]	Pass	Fail
System	SZHP	No	No	8	Unconditioned	N	☐	☐

[1] *Status: N – New, E – Existing*

Does the Project include Zonal Systems? (If "Yes", see NRCC-PRF-MCH-DETAILS for system information)	No
Does the Project include a Solar Hot Water System? (If "Yes", see NRCC-PRF-MCH-DETAILS for system information)	No
Multifamily or Hotel/ Motel Occupancy? (If "Yes", see NRCC-PRF-MCH-DETAILS for DHW system information)	No

Q. INDOOR CONDITIONED LIGHTING GENERAL INFO (see NRCC-PRF-LTI-DETAILS for more info)[1] — § 140.6 — Confirmed (Pass / Fail)

1. Occupancy Type [1]	2. Conditioned Floor Area [2] (ft²)	3. Installed Lighting Power (Watts)	4. Lighting Control Credits (Watts)	5. Additional (Custom) Allowance: Area Category Footnotes (Watts)	5. Additional (Custom) Allowance: Tailored Method (Watts)	Pass	Fail
Classrooms, Lecture, Training, Vocational Areas	3,658	1,632	0	0	0	☐	☐
Building Totals:	**3,658**	**1,632**	**0**	**0**	**0**		

[1] *See Table 140.6-C*

Project Name:	MONSON	NRCC-PRF-01-E	Page 11 of 18
Project Address:	10643 AVE 416 DINUBA	Calculation Date/Time:	15:26, Tue, Jun 19, 2018
Compliance Scope:	NewComplete	Input File Name:	C18-117.cibd16x

[1] *See NRCC-LTI-01-E for unconditioned spaces*
[2] *Lighting information for existing spaces modeled is not included in the table*

R. INDOOR CONDITIONED LIGHTING SCHEDULE (Adapted from NRCC-LTI-01-E)[2] — § 130.0 — Confirmed (Pass / Fail)

Luminaire Schedule (includes all permanent installed lighting in conditioned space, and portable lighting over 0.3 w/ft² in offices)									
Name or Item Tag	Complete Luminaire Description (i.e., 3-lamp fluorescent troffer, F32T8, one dimmable electronic ballast)	Installed Watts (Conditioned): Watts per luminaire	How Wattage is Determined: CEC Default from NA6	How Wattage is Determined: According to §130.0(c)	Total Number Luminaires	Installed Watts	Pass	Fail
F1	F1	51	No	Yes	32	1,632	☐	☐

[2] *Lighting power densities were used in the compliance model Building Departments will need to check prescriptive forms for Luminaire Schedule details.*

S1. COVERED PROCESS SUMMARY – ENCLOSED PARKING GARAGES — § 140.9

This Section Does Not Apply

S2. COVERED PROCESS SUMMARY – COMMERCIAL KITCHENS — § 140.9

This Section Does Not Apply

S3. COVERED PROCESS SUMMARY – COMPUTER ROOMS — § 140.9

This Section Does Not Apply

S4. COVERED PROCESS SUMMARY – LABORATORY EXHAUSTS — § 140.9

This Section Does Not Apply

T. UNMET LOAD HOURS

This Section Does Not Apply

U. ENERGY USE SUMMARY

Energy Component	Standard Design Site (MWh)	Proposed Design Site (MWh)	Margin (MWh)	Standard Design Site (MBtu)	Proposed Design Site (MBtu)	Margin (MBtu)
Space Heating	--	4.1	--	31.0	--	--
Space Cooling	8.8	7.3	1.5	--	--	--

Project Name:	MONSON	NRCC-PRF-01-E	Page 12 of 18
Project Address:	10643 AVE 416 DINUBA	Calculation Date/Time:	15:26, Tue, Jun 19, 2018
Compliance Scope:	NewComplete	Input File Name:	C18-117.cibd16x

U. ENERGY USE SUMMARY

Energy Component	Standard Design Site (MWh)	Proposed Design Site (MWh)	Margin (MWh)	Standard Design Site (MBtu)	Proposed Design Site (MBtu)	Margin (MBtu)
Indoor Fans	11.5	7.8	3.7	--	--	--
Heat Rejection	--	--	--	--	--	--
Pumps & Misc.	--	--	--	--	--	--
Domestic Hot Water	--	--	--	29.5	29.5	0.0
Indoor Lighting	9.0	3.3	5.7	--	--	--
COMPLIANCE TOTAL	**29.3**	**22.5**	**6.8**	**60.5**	**29.5**	**31.0**
Receptacle	9.7	9.7	0.0	--	--	--
Process	--	--	--	--	--	--
Other Ltg	--	--	--	--	--	--
Process Motors	--	--	--	--	--	--
TOTAL	**39.0**	**32.2**	**6.8**	**60.5**	**29.5**	**31.0**

Project Name:	MONSON	NRCC-PRF-01-E	Page 13 of 18
Project Address:	10643 AVE 416 DINUBA	Calculation Date/Time:	15:26, Tue, Jun 19, 2018
Compliance Scope:	NewComplete	Input File Name:	C18-117.cibd16x

DOCUMENTATION AUTHOR'S DECLARATION STATEMENT — § 10-103

I certify that this Certificate of Compliance documentation is accurate and complete.

Documentation Author Name: FRANK CANTELMI	Signature:
Company: Cantelmi engineering, Inc.	
Address: 2130 F STREET	Signature Date: 06-19-18
City/State/Zip: BAKERSFIELD CA	CEA Identification (if applicable): 21190
Phone: 661-324-5252	

RESPONSIBLE PERSON'S DECLARATION STATEMENT

I certify the following under penalty of perjury, under the laws of the State of California:

1	I hereby affirm that I am eligible under the provisions of Division 3 of the Business and Professions Code to sign this document as the person responsible for its preparation; and that I am licensed in the State of California as a civil engineer, mechanical engineer, electrical engineer, or I am a licensed architect.
2	I affirm that I am eligible under the provisions of Division 3 of the Business and Professions Code by section 5537.2 or 6737.3 to sign this document as the person responsible for its preparation; and that I am a licensed contractor performing this work.
3	I affirm that I am eligible under Division 3 of the Business and Professions Code to sign this document because it pertains to a structure or type of work described as exempt pursuant to Business and Professions Code Sections 5537, 5538 and 6737.1.

Responsible Envelope Designer Name: JTS	Signature:	
Company: JTS	Date Signed:	
Address: 7001 MCDIVIT CT	Declaration Statement Type:	
City/State/Zip: BAKERSFIELD CA 93313	Title:	License #:
Phone: 661-835-9270		
Responsible Lighting Designer Name: FRANK CANTELMI	Signature:	
Company: CANTELMI ENG	Date Signed: 06-19-18	
Address: 2130 F ST.	Declaration Statement Type: ENGINEER	
City/State/Zip: BAKERSFIELD CA	Title: ENGINEER	License #: 21190
Phone: 6613245252		
Responsible Mechanical Designer Name: FRANK CANTELMI	Signature:	
Company: CANTELMI ENG	Date Signed: 06-19-18	
Address: 2130 F ST.	Declaration Statement Type: ENGINEER	
City/State/Zip: BAKERSFIELD CA	Title: ENGINEER	License #: 21190
Phone: 6613245252		

Project Name:	MONSON	NRCC-PRF-01-E	Page 14 of 18
Project Address:	10643 AVE 416 DINUBA	Calculation Date/Time:	15:26, Tue, Jun 19, 2018
Compliance Scope:	NewComplete	Input File Name:	C18-117.cibd16x

NRCC-PRF-ENV-DETAILS -SECTION START-

A. OPAQUE SURFACE ASSEMBLY DETAILS — Confirmed (Pass / Fail)

1. Surface Name	2. Surface Type	3. Description of Assembly Layers	4. Notes	Pass	Fail
R-19 Walls	ExteriorWall	Stucco - 7/8 in. Vapor permeable felt - 1/8 in. Wood framed wall, 16in. OC. 5.5in., R-19 Gypsum Board - 1/2 in.		☐	☐
Slab On Grade17	UndergroundFloor	Slab Type = Unheated

Project Name:	MONSON	NRCC-PRF-01-E	Page 17 of 18
Project Address:	10643 AVE 416 DINUBA	Calculation Date/Time:	15:26, Tue, Jun 19, 2018
Compliance Scope:	NewComplete	Input File Name:	C18-117.cibd16x

B. INDOOR CONDITIONED LIGHTING MANDATORY LIGHTING CONTROLS (Adapted from NRCC-LTI-02-E)	§ 130.1
This Section Does Not Apply	

§130.1(a) = Manual area controls; §130.0(b) = Multi Level; §130.1(c) = Auto Shut-Off; §130.1(d) = Mandatory Daylight; §130.1(e) = Demand Responsive

C. TAILORED METHOD CONDITIONED LIGHTING POWER ALLOWANCE SUMMARY AND CHECKLIST (Adapted from NRCC-LTI-04-E)	§ 140.6
General lighting power (see Table D)	0
General lighting power from special function areas (see Table E)	NA
Additional "use it or lose it" (See Table G)	0
Total watts	0

D. GENERAL LIGHTING POWER (Adapted from NRCC-LTI-04-E)	§ 140.6-D
This Section Does Not Apply	

E. GENERAL LIGHTING FROM SPECIAL FUNCTION AREAS (Adapted from NRCC-LTI-04-E) § 140.6(c) 3H

Room Number	Primary Function Area	Illuminance Value (LUX)	Room Cavity Ratio (Table G)	Allowed LPD	Floor Area (ft²)	Allowed Watts	Confirmed Pass	Confirmed Fail
NA	NA	NA	NA	NA	NA	NA	☐	☐

Note: Tailored Method for Special Function Areas is not currently implemented

F. ROOM CAVITY RATIO (Adapted from NRCC-LTI-04-E)

Rectangular Spaces

Room Number	Task/Activity Description	Room Length (ft)	Room Width (ft)	Room Cavity Height (ft)	RCR	Confirmed Pass	Confirmed Fail
NA	NA	NA	NA	NA	NA	☐	☐

Non-Rectangular Spaces

This Section Does Not Apply

Note: All applicable spaces are listed under the Non-Rectangular Spaces table

STATE OF CALIFORNIA
OUTDOOR LIGHTING
CEC-NRCC-LTO-01-E (Revised 04/16) CALIFORNIA ENERGY COMMISSION

CERTIFICATE OF COMPLIANCE NRCC-LTO-01-E
Outdoor Lighting (Page 2 of 4)
Project Name: MONSON Date Prepared: 6/19/2018

G. Schedule of Luminaires Exempt from the Cutoff Requirements in §130.2(b)

01 Name or Symbol	02 Description of exempt luminaire in accordance with the exemptions

H. Schedule of Luminaires Exempt from the Outdoor Lighting Control Requirements in §130.2(c)

01 Name or Symbol	02 Description of exempt luminaire in accordance with the exemptions

STATE OF CALIFORNIA
OUTDOOR LIGHTING CONTROLS
CEC-NRCC-LTO-02-E (Revised 08/16) CALIFORNIA ENERGY COMMISSION

CERTIFICATE OF COMPLIANCE NRCC-LTO-02-E
Outdoor Lighting Controls (Page 2 of 3)
Project Name: MONSON Date Prepared: 6/19/2018

B. Mandatory Outdoor Lighting Control Schedule and Field Inspection Checklist

Outdoor Lighting Control Schedule; Standards Complying With (✓ all that apply, or enter 'E' if Exempted)

01 Location and Application of Luminaires Being Controlled	02 Type/ Description of Lighting Control (i.e. outdoor motion sensor, outdoor photocontrol, outdoor astronomical time-switch control, automatic scheduling control, part-night outdoor lighting control)	03 # of Units	04 §130.2(a)	05 §130.2(c)1	06 §130.2(c)2	07 §130.2(c)3	08 §130.2(c)4	09 §130.2(c)5	10 ✓ if Acceptance Test Required	11 Field Inspector Pass	11 Field Inspector Fail
		1		✓	✓				☐	☐	☐
									☐	☐	☐
									☐	☐	☐
									☐	☐	☐
									☐	☐	☐
									☐	☐	☐
									☐	☐	☐
									☐	☐	☐
									☐	☐	☐
									☐	☐	☐
									☐	☐	☐
									☐	☐	☐
									☐	☐	☐
									☐	☐	☐
									☐	☐	☐
									☐	☐	☐
									☐	☐	☐

STATE OF CALIFORNIA
OUTDOOR LIGHTING POWER ALLOWANCES
CEC-NRCC-LTO-03-E (Revised 01/16) CALIFORNIA ENERGY COMMISSION

CERTIFICATE OF COMPLIANCE NRCC-LTO-03-E
Outdoor Lighting Power Allowances (Page 3 of 4)
Project Name: MONSON Date Prepared: 6/19/2018

C-3. WATTAGE ALLOWANCE PER SQUARE FOOT OF HARDSCAPE AREA (Ornamental Lighting) – Table 140.7-B

☐ Allowance for the total site illuminated hardscape area. Luminaires qualifying for this allowance shall be rated for 100 watts or less as determined in accordance with Section 130.0(c), and shall be post-top luminaires, lanterns, pendant luminaires, or chandeliers.

☐ If more than one luminaire type is used per location, use multiple rows for that location

01 Name of area for which ornamental allowance is claimed	02 ALLOTTED WATTS Square Feet of Hardscape	03 Wattage Allowance per Square Foot	04 Allotted Watts (02 x 03)	05 DESIGN WATTS Luminaire Code or Symbol	06 Luminaire Description	07 Luminaire Quantity	08 Watts per Luminaire	09 Design Watts (07 x 08)	10 Allowed Watts (smaller of 04 or 09)
Sum total allowance for ornamental lighting on the site:									0

C-4. WATTAGE ALLOWANCE PER SQUARE FOOT OF SPECIFIC AREA - Table 140.7-B

☐ Allowances for Building Facades; Outdoor Sales Lots; Vehicle Service Station Hardscape; Vehicle Service Station Canopies; Sales Canopies; Non-sales Canopies; Tunnels; Guard Stations; Student Pick-up/Drop-off zone: Outdoor Dining; Special Security Lighting for Retail Parking and Pedestrian Hardscape.

☐ If more than one luminaire type is used per location, use multiple rows for that location

01 Name of Location for Which Allowance is Claimed	02 ALLOTTED WATTS Illuminated Area of Application	03 Wattage Allowance per square Foot	04 Allotted Watts (02 x 03)	05 DESIGN WATTS Luminaire Code or Symbol	06 Luminaire Description	07 Luminaire Quantity	08 Watts per Luminaire	09 Design Watts (07 x 08)	10 Allowed Watts (smaller of 04 or 09)
Sum total allowance for specific area on the site:									0

Project Name:	MONSON	NRCC-PRF-01-E	Page 18 of 18
Project Address:	10643 AVE 416 DINUBA	Calculation Date/Time:	15:26, Tue, Jun 19, 2018
Compliance Scope:	NewComplete	Input File Name:	C18-117.cibd16x

G. ADDITIONAL "USE IT OR LOSE IT" (Adapted from NRCC-LTI-04-E)

1. Wall Display	2. Combined Floor Display and Task Lighting	3. Combined Ornamental and Special Effects Lighting	4. Very Valuable Merchandise	Allowed Watts	Confirmed Pass	Confirmed Fail
0	0	0	0	0	☐	☐

5. Wall Display
This Section Does Not Apply

6. Floor Display and Task Lighting
This Section Does Not Apply

7. Combined Ornamental and Special Effects Lighting
This Section Does Not Apply

8. Very Valuable Merchandise
This Section Does Not Apply

H. INDOOR & OUTDOOR LIGHTING ACCEPTANCE TESTS & FORMS (Adapted from NRCC-LTI-01-E and NRCC-LTO-01-E) § 130.4

Declaration of Required Acceptance Certificates (NRCA) –Acceptance Certificates that must be verified in the field. (Retain copies and verify forms are completed and signed to post in field for Field Inspector to verify).

Test Description		Indoor			Outdoor	Confirmed	
		NRCA-LTI-02-A	NRCA-LTI-03-A	NRCA-LTI-04-A	NRCA-LTO-02-A		
Equipment Requiring Testing or Verification	# of units	Occ Sensors / Auto Time Switch	Auto Daylight	Demand Responsive	Outdoor Controls	Pass	Fail
Occupant Sensors	1	☒	☐	☐	☐	☐	☐
Automatic Time Switch	0	☒	☐	☐	☐	☐	☐
Automatic Daylighting	1	☐	☒	☐	☐	☐	☐
Demand Responsive	0	☐	☐	☐	☐	☐	☐
Outdoor Controls	1	☐	☐	☐	☒	☐	☐

STATE OF CALIFORNIA
OUTDOOR LIGHTING
CEC-NRCC-LTO-01-E (Revised 02/16) CALIFORNIA ENERGY COMMISSION

CERTIFICATE OF COMPLIANCE NRCC-LTO-01-E
Outdoor Lighting (Page 3 of 4)
Project Name: MONSON Date Prepared: 6/19/2018

I. Outdoor Lighting Schedule and Field Inspection Energy Checklist

01 Name or Item Tag	02 Complete Luminaire Description	03 Watts per Luminaire	04 How wattage was determined: CEC Default from NA8	04 According to §130.0(c)	05 Number of Luminaires	06 Total Installed Watts in this area (3 x 5)	07 Location: Primary Function area in which the luminaires are installed (Outdoor Lighting Zone)	08 Cutoff: BUG Rating	09 Field Inspector Pass	09 Field Inspector Fail
F5	F5	29.0	☐	☑	4	116	Automotive Hardscape	UH: n/a UL: n/a FVH: n/a BVH: n/a FH: n/a BH: n/a	☐	☐
			☐	☐				UH: UL: FVH: BVH: FH: BH:	☐	☐
			☐	☐				UH: UL: FVH: BVH: FH: BH:	☐	☐
INSTALLED WATTS PAGE TOTAL:						116	Enter sum total of all pages (**Sum Total INSTALLED** Outdoor lighting wattage) into NRCC-LTO-01-E, page 1.	116		

STATE OF CALIFORNIA
OUTDOOR LIGHTING CONTROLS
CEC-NRCC-LTO-02-E (Revised 08/16) CALIFORNIA ENERGY COMMISSION

CERTIFICATE OF COMPLIANCE NRCC-LTO-02-E
Outdoor Lighting Controls (Page 3 of 3)
Project Name: MONSON Date Prepared: 6/19/2018

DOCUMENTATION AUTHOR'S DECLARATION STATEMENT
1. I certify that this Certificate of Compliance documentation is accurate and complete.

Documentation Author Name:	FRANK CANTELMI	Documentation Author Signature:	[signature]
Company:	Cantelmi engineering, Inc.	Signature Date:	6/19/2018
Address:	2130 F STREET	CEA Certification Identification (if applicable):	21190
City/State/Zip:	BAKERSFIELD , CA	Phone:	661-324-5252

RESPONSIBLE PERSON'S DECLARATION STATEMENT
I certify the following under penalty of perjury, under the laws of the State of California:
1. The information provided on this Certificate of Compliance is true and correct.
2. I am eligible under Division 3 of the Business and Professions Code to accept responsibility for the building design or system design identified on this Certificate of Compliance (responsible designer).
3. The energy features and performance specifications, materials, components, and manufactured devices for the building design or system design identified on this Certificate of Compliance conform to the requirements of Title 24, Part 1 and Part 6 of the California Code of Regulations.
4. The building design features or system design features identified on this Certificate of Compliance are consistent with the information provided on other applicable compliance documents, worksheets, calculations, plans and specifications submitted to the enforcement agency for approval with this building permit application.
5. I will ensure that a completed signed copy of this Certificate of Compliance shall be made available with the building permit(s) issued for the building, and made available to the enforcement agency for all applicable inspections. I understand that a completed signed copy of this Certificate of Compliance is required to be included with the documentation the builder provides to the building owner at occupancy.

Responsible Designer Name:	FRANK CANTELMI	Responsible Designer Signature:	[signature]
Company :	CANTELMI ENG	Date Signed:	06-19-18
Address:	2130 F ST.	License:	21190
City/State/Zip:	BAKERSFIELD , CA	Phone:	6613245252

STATE OF CALIFORNIA
OUTDOOR LIGHTING POWER ALLOWANCES
CEC-NRCC-LTO-03-E (Revised 01/16) CALIFORNIA ENERGY COMMISSION

CERTIFICATE OF COMPLIANCE NRCC-LTO-03-E
Outdoor Lighting Power Allowances (Page 4 of 4)
Project Name: MONSON Date Prepared: 6/19/2018

DOCUMENTATION AUTHOR'S DECLARATION STATEMENT
1. I certify that this Certificate of Compliance documentation is accurate and complete.

Documentation Author Name:	FRANK CANTELMI	Documentation Author Signature:	[signature]
Company:	Cantelmi engineering, Inc.	Signature Date:	6/19/2018
Address:	2130 F STREET	CEA Certification Identification (if applicable):	21190
City/State/Zip:	BAKERSFIELD , CA	Phone:	661-324-5252

RESPONSIBLE PERSON'S DECLARATION STATEMENT
I certify the following under penalty of perjury, under the laws of the State of California:
1. The information provided on this Certificate of Compliance is true and correct.
2. I am eligible under Division 3 of the Business and Professions Code to accept responsibility for the building design or system design identified on this Certificate of Compliance (responsible designer).
3. The energy features and performance specifications, materials, components, and manufactured devices for the building design or system design identified on this Certificate of Compliance conform to the requirements of Title 24, Part 1 and Part 6 of the California Code of Regulations.
4. The building design features or system design features identified on this Certificate of Compliance are consistent with the information provided on other applicable compliance documents, worksheets, calculations, plans and specifications submitted to the enforcement agency for approval with this building permit application.
5. I will ensure that a completed signed copy of this Certificate of Compliance shall be made available with the building permit(s) issued for the building, and made available to the enforcement agency for all applicable inspections. I understand that a completed signed copy of this Certificate of Compliance is required to be included with the documentation the builder provides to the building owner at occupancy.

Responsible Designer Name:	FRANK CANTELMI	Responsible Designer Signature:	[signature]
Company :	CANTELMI ENG	Date Signed:	06-19-18
Address:	2130 F ST.	License:	21190
City/State/Zip:	BAKERSFIELD , CA	Phone:	6613245252

ENVELOPE MANDATORY MEASURES: NONRESIDENTIAL
ENV-MM

Project Name: MONSON Date: 6/19/2018

DESCRIPTION

Building Envelope Measures:

§110.8(a): Installed insulating material shall have been certified by the manufacturer to comply with the California Quality Standards for insulating material, Title 20 Chapter 4, Article 3.

§110.8(c): All Insulating Materials shall be installed in compliance with the flame spread rating and smoke density requirements of Sections 2602 and 707 of Title 24, Part 2.

§110.8(g): Heated slab floors shall be insulated according to the requirements in Table 110.8-A.

§110.7(a): All Exterior Joints and openings in the building that are observable sources of air leakage shall be caulked, gasketed, weatherstripped or otherwise sealed.

§110.6(a): Manufactured fenestration products and exterior doors shall have air infiltration rates not exceeding 0.3 cfm/ft² of window area, 0.3 cfm/ft² of door area for residential doors, 0.3 cfm/ft² of door area for nonresidential single doors (swinging and sliding), and 1.0 cfm/ft² for nonresidential double doors (swinging).

§110.6(a): Fenestration U-factor shall be rated in accordance with NFRC 100, or the applicable default U-factor.

§110.6(a): Fenestration SHGC shall be rated in accordance with NFRC 200, or NFRC 100 for site-built fenestration, or the applicable default SHGC.

§110.6(b): Site Constructed Doors, Windows and Skylights shall be caulked between the unit and the building, and shall be weatherstripped (except for unframed glass doors and fire doors).

§120.7(a): The opaque portions of the roof/ceiling that separates conditioned spaces from unconditioned spaces or ambient air shall meet the applicable U-Factor requirements as follows:
Metal Building- The weighted average U-factor of the roof assembly shall not exceed 0.098.
Wood Framed and Others- The weighted average U-factor of the roof assembly shall not exceed 0.075.

§120.7(b): The opaque portions of walls that separate conditioned spaces from unconditioned spaces or ambient air shall meet the applicable U-factor as follows:
Metal Building- The weighted average U-factor of the wall assembly shall not exceed 0.113.
Metal Framed- The weighted average U-factor of the wall assembly shall not exceed 0.151.
Light Mass Walls- A 6 inch or greater Hollow Core Concrete Masonry Unit shall have a U-factor not to exceed 0.440.
Heavy Mass Walls- An 8 inch or greater Hollow Core Concrete Masonry Unit shall have a U-factor not to exceed 0.690.
Wood Framed and Others- The weighted average U-factor of the wall assembly shall not exceed 0.110.
Spandrel Panels and Opaque Curtain Wall- The weighted average U-factor of the spandrel panels and opaque curtain wall assembly shall not exceed 0.280.
Demising Walls- The opaque portions of framed demising walls shall meet the requirements of Item A or B below:
A. Wood framed walls shall be insulated to meet a U-factor not greater than 0.099.
B. Metal Framed walls shall be insulated to meet a U-factor not greater than 0.151.

§120.7(c): The opaque portions of floors and soffits that separate conditioned spaces from unconditioned spaces or ambient air shall meet the applicable U-factor requirements as follows:
Raised Mass Floors- Shall have a minimum of 3 inches of lightweight concrete over a metal deck or the weighted average U-factor of the floor assembly shall not exceed 0.269.
Other Floors- The weighted average U-factor of the floor assembly shall not exceed 0.071.

STATE OF CALIFORNIA
OUTDOOR LIGHTING
CEC-NRCC-LTO-01-E (Revised 02/16) CALIFORNIA ENERGY COMMISSION

CERTIFICATE OF COMPLIANCE NRCC-LTO-01-E
Outdoor Lighting (Page 4 of 4)
Project Name: MONSON Date Prepared: 6/19/2018

DOCUMENTATION AUTHOR'S DECLARATION STATEMENT
1. I certify that this Certificate of Compliance documentation is accurate and complete.

Documentation Author Name:	FRANK CANTELMI	Documentation Author Signature:	[signature]
Company:	Cantelmi engineering, Inc.	Signature Date:	6/19/2018
Address:	2130 F STREET	CEA Certification Identification (if applicable):	21190
City/State/Zip:	BAKERSFIELD , CA	Phone:	661-324-5252

RESPONSIBLE PERSON'S DECLARATION STATEMENT
I certify the following under penalty of perjury, under the laws of the State of California:
1. The information provided on this Certificate of Compliance is true and correct.
2. I am eligible under Division 3 of the Business and Professions Code to accept responsibility for the building design or system design identified on this Certificate of Compliance (responsible designer).
3. The energy features and performance specifications, materials, components, and manufactured devices for the building design or system design identified on this Certificate of Compliance conform to the requirements of Title 24, Part 1 and Part 6 of the California Code of Regulations.
4. The building design features or system design features identified on this Certificate of Compliance are consistent with the information provided on other applicable compliance documents, worksheets, calculations, plans and specifications submitted to the enforcement agency for approval with this building permit application.
5. I will ensure that a completed signed copy of this Certificate of Compliance shall be made available with the building permit(s) issued for the building, and made available to the enforcement agency for all applicable inspections. I understand that a completed signed copy of this Certificate of Compliance is required to be included with the documentation the builder provides to the building owner at occupancy.

Responsible Designer Name:	FRANK CANTELMI	Responsible Designer Signature:	[signature]
Company :	CANTELMI ENG	Date Signed:	6-19-18
Address:	2130 F ST.	License:	21190
City/State/Zip:	BAKERSFIELD , CA	Phone:	6613245252

STATE OF CALIFORNIA
OUTDOOR LIGHTING POWER ALLOWANCES
CEC-NRCC-LTO-03-E (Revised 01/16) CALIFORNIA ENERGY COMMISSION

CERTIFICATE OF COMPLIANCE NRCC-LTO-03-E
Outdoor Lighting Power Allowances (Page 1 of 4)
Project Name: MONSON Date Prepared: 6/19/2018

A. OUTDOOR LIGHTING POWER ALLOWANCE SUMMARY

1. General Hardscape Lighting Power Allowance (Site Total from Section B of NRCC-LTO-03-E)		1.	624
2. Additional Specific "use it or lose it" Lighting Power Allowances listed in each of these cells shall be identical to total allowed watts determined in Section C-1 to C-4 of NRCC-LTO-03-E.			
PER APPLICATION from Section C-1: 0 + PER UNIT LENGTH (SALES FRONTAGE) from Section C-2: 0 + PER HARDSCAPE AREA (ORNAMENTAL LIGHTING) from Section C-3: 0 + PER SPECIFIC AREA from Section C-4.: 0	=	2.	0
3. **Sum Total ALLOWED** Outdoor Lighting Wattage (add rows 1 and 2)		3.	624

B. GENERAL HARDSCAPE LIGHTING POWER ALLOWANCE FROM TABLE 140.7-A

01 Name of Area	02 Area Wattage Allowance (AWA): Illuminated Hardscape Area	03 AWA Per Square Foot	04 AWA (B02 x B03)	05 Linear Wattage Allowance (LWA): Perimeter Length of General Hardscape	06 LPA per Linear Foot	07 LWA (B05 x B06)	08 Initial Wattage Allowance (IWA): IWA (Watts)	09 Total General Hardscape Lighting Allowance: B04 + B07 + B08
Ext Task	1,235	0.040	49	156	0.350	55	520	624
							TOTAL	624

STATE OF CALIFORNIA
OUTDOOR LIGHTING
CEC-NRCC-LTO-01-E (Revised 04/16) CALIFORNIA ENERGY COMMISSION

CERTIFICATE OF COMPLIANCE NRCC-LTO-01-E
Outdoor Lighting (Page 1 of 4)
Project Name: MONSON Date Prepared: 6/19/2018

A. General Information

Project Address: 10643 AVE 416 DINUBA, CA	Total Illuminated Hardscape Area: 1,235
Phase of Construction: ☑ New Construction ☐ Addition ☐ Alteration	
Outdoor Lighting Zone (LZ) ☐ LZ-1 ☐ LZ-2 ☑ LZ-3 ☐ LZ-4	
I have confirmed with the AHJ which LZ applies to this site. For default lighting zone designations, see Title 24 Part 6, §10-114	

B. Lighting Compliance Documents (check box for each document included)
For detailed instructions on the use of this and all Energy Efficiency Standards compliance documents, refer to the Nonresidential Manual published by the California Energy Commission.

☑ NRCC-LTO-01-E Certificate of Compliance
☑ NRCC-LTO-02-E Outdoor Lighting Controls Certificate of Compliance
☑ NRCC-LTO-03-E Outdoor Lighting Power Allowance Certificate of Compliance
☐ NRCC-LTO-04-E Outdoor Lighting Existing Conditions Certificate of Compliance

C. Summary of Allowed Outdoor Lighting Power		Watts
01	**Sum Total ALLOWED** Outdoor Lighting Wattage from NRCC-LTO-03-E, page 1 Alterations with NO increase of connected lighting load may instead use the allowed wattage from NRCC-LTO-04, page 2.	624
	Complies ONLY if Installed (Box 02) ≤ Allowed (Box 01)	
02	**Sum Total INSTALLED** Outdoor Lighting Wattage from NRCC-LTO-01-E, page 3.	116

D. Declaration of Required Installation Certificates
Declare by checking all Installation Certificates that will be submitted. (Retain copies and verify compliance documents are completed and signed.)

☑ NRCI-LTO-01-E - Must be submitted for all buildings ☐ Field Inspector
☑ NRCI-LTO-02-E - Must be submitted for a lighting control system, or for an Energy Management Control System (EMCS), to be recognized for compliance. ☐ Field Inspector

E. Declaration of Required Certificates of Acceptance
Declare by checking all of the Certificates of Acceptance that will be submitted. (Retain copies and verify compliance documents are completed and signed.)

☑ NRCA-LTO-02-A - Must be submitted for outdoor lighting controls. ☐ Field Inspector

F. Schedule of Luminaires Exempt from the Outdoor Lighting Power Requirements in §140.7

01 Name or Symbol	02 Description of exempt luminaire in accordance with the exemptions

STATE OF CALIFORNIA
OUTDOOR LIGHTING CONTROLS
CEC-NRCC-LTO-02-E (Revised 08/16) CALIFORNIA ENERGY COMMISSION

CERTIFICATE OF COMPLIANCE NRCC-LTO-02-E
Outdoor Lighting Controls (Page 1 of 3)
Project Name: MONSON Date Prepared: 6/19/2018

A. Mandatory Outdoor Lighting Control Declaration Statements
Check all that apply:

☐ Lighting shall be controlled by self-contained lighting control devices which are certified to the Energy Commission according to the Title 20 Appliance Efficiency Regulations in accordance with §110.9(a).
☐ Lighting shall be controlled by a lighting control system or energy management control system in accordance with §110.9. An Installation Certificate shall be submitted in accordance with §130.4(b).
☑ All lighting controls and equipment shall comply with the applicable requirements in §110.9 and shall be installed in accordance with the manufacturer's instructions in accordance with §130.0(d).
☐ Part-Night Outdoor Lighting Controls, as defined in Section 100.1(b), shall meet the requirements in Section 110.9(b)5.
☐ All outdoor incandescent luminaires rated over 100 watts, determined in accordance with Section 130.0(c), shall be controlled by a motion sensor.
☐ All outdoor luminaires rated for use with lamps greater than 150 lamp watts, determined in accordance with Section 130.0(c), shall comply with Uplight and Glare requirements in accordance with Section 130.2(b).
☑ All installed outdoor lighting shall be controlled by a photocontrol or outdoor astronomical time-switch control, or other control capable of automatically switching OFF in accordance with Section 130.2(c)1.
☑ All installed outdoor lighting shall be independently controlled from other electrical loads by an automatic scheduling control in accordance with Section 130.2(c)2.
☐ All installed outdoor lighting, where the bottom of the luminaire is mounted 24 feet or less above the ground, shall be controlled with automatic lighting controls in accordance with Section 130.2(c)3.
☐ For Outdoor Sales Frontage, an automatic lighting control shall be installed in accordance with Section 130.2(c)4.
☐ For Building Facade, Ornamental Hardscape and Outdoor Dining lighting, an automatic lighting control shall be installed in accordance with Section 130.2(c)5.
☑ Before an occupancy permit is granted for the newly constructed building or for the addition, or for any altered outdoor lighting, the outdoor lighting controls shall be certified as meeting the Acceptance Requirements for Code Compliance in accordance with §130.4.(a). Outdoor lighting controls shall comply with the applicable requirements of Section 130.2(c) and Reference Nonresidential Appendix NA7.8.

STATE OF CALIFORNIA
OUTDOOR LIGHTING POWER ALLOWANCES
CEC-NRCC-LTO-03-E (Revised 01/16) CALIFORNIA ENERGY COMMISSION

CERTIFICATE OF COMPLIANCE NRCC-LTO-03-E
Outdoor Lighting Power Allowances (Page 2 of 4)
Project Name: MONSON Date Prepared: 6/19/2018

C. ADDITIONAL "USE IT OR LOSE IT" OUTDOOR LIGHTING POWER ALLOWANCES FOR SPECIFIC APPLICATIONS
☐ The additional specific outdoor lighting power allowance shall be the smaller of the allowed lighting power or the actual lighting power used.
☐ Use Outdoor Lighting Zone (OLZ) that is documented on page 1 of NRCC-LTO-01-E to calculate the specific wattage allowances.

C-1. WATTAGE ALLOWANCE PER APPLICATION – Table 140.7-B
☐ Available only for qualifying locations, which include Building Entrances or Exits; Primary Entrances to Senior Care Facilities, Police Stations, Hospitals, Fire Stations, and Emergency Vehicle Facilities; Drive Up Windows; Vehicle Service Station Uncovered Fuel Dispenser, ATM Machine Lighting
☐ If more than one luminaire type is used per location, use multiple rows for that location

01 Name of Location for Which Allowance is Claimed	02 ALLOTTED WATTS Number of Qualifying Locations	03 Wattage Allowance per Qualifying Location	04 Allotted Watts (02 x 03)	05 DESIGN WATTS Luminaire Code or Symbol	06 Luminaire Description	07 Luminaire Quantity	08 Watts per Luminaire	09 Design Watts (07 x 08)	10 Allowed Watts (smaller of 04 or 09)
Sum total allowance per application on this site:									0

C-2. WATTAGE ALLOWANCE PER UNIT LENGTH (Sales Frontage) from Table 140.7-B
☐ If more than one luminaire type is used per location, use multiple rows for that location

01 Name of Location for Which Allowance is Claimed	02 ALLOTTED WATTS Linear Feet of Sales Frontage	03 Wattage Allowance per Linear Foot	04 Allotted Watts (02 x 03)	05 DESIGN WATTS Luminaire Code or Symbol	06 Luminaire Description	07 Luminaire Quantity	08 Watts per Luminaire	09 Design Watts (07 x 08)	10 Allowed Watts (smaller of 04 or 09)
Sum total allowance for sales frontage on the site:									0

JTS MODULAR
DESIGN • BUILD • TRANSPORT• ENJOY
7001 MC Divitt DRIVE
BAKERSFIELD, CA 93313
WWW.JTSMODULAR.COM
OFFICE: (661) 835-9270

LICENSE #E18218
CANTELMI ENGINEERING
2130 F STREET
BAKERSFIELD, CA 93301
TEL: (661) 324-5252
FAX: (661) 324-8439
Cantelmi@Cantelmi.NET
7/16/18

REGISTERED PROFESSIONAL ENGINEER FRANK J. CANTELMI No. 21190 MECHANICAL STATE OF CALIFORNIA

REGISTERED PROFESSIONAL ENGINEER RYAN J. OMER No. S 4437 EXP. 12/31/18 STRUCTURAL STATE OF CALIFORNIA

MONSON - SULTANA ELEMENTARY SCHOOL
CLASSROOM - SLAB ON GRADE PC (02-113899)
10643 AVENUE 416, DINUBA, CA 93618
MONSON - SULTANA JOINT UNION ELEMENTARY SCHOOL DISTRICT

IDENTIFICATION STAMP
DIVISION OF THE STATE ARCHITECT
CODE 2013 CBC

IDENTIFICATION STAMP DIV. OF THE STATE ARCHITECT
02 117 009
AC FLS SS
DATE 7/23/18

JTS JOB#: 06-0246
DATE: 7/16/2018

file: S:\DWGS2018\JTS\MONSON SALTANA C18-117\C18-117_ELECT_R3.dwg date: 7/16/2018 2:30 PM

ENERGY CALCULATIONS

EC-1.02-R